W:\STR\B0204\PLANS\ C1_TITLE.DGN 12-17-2013

DRAWING INDEX	
SHEET NO.	SHEET TITLE
C1	TITLE SHEET
C2	SILT FENCE
C3	CONCRETE PAVEMENT APPROACH SLAB
C4	NAME PLATE
C5	TURBIDITY BARRIER
C6	CATCH BASIN
C7	INLET COVER
T1	TRAFFIC CONTROL - STAGE 1
T2	TRAFFIC CONTROL - STAGE 2
T3	PAVEMENT MARKING
T4	DETOUR PLAN
T5	TRAFFIC QUANTITIES
1	SITE PLAN
2	SECTION AND PLAN QUANTITIES
3	DECK PLAN SPANS 1 AND 2
4	DECK PLAN SPANS 3 AND 4
5	STAGE 1 CONSTRUCTION CROSS SECTION
6	STAGE 2 CONSTRUCTION CROSS SECTION
7	DECK BILL OF BARS AND DETAILS
8	DECK GRADES
9	DECK GRADES
10	SOUTH ABUTMENT ELEVATION AND PLAN VIEW
11	SOUTH ABUTMENT SECTION AND BILL OF BARS
12	SOUTH ABUTMENT WING WALL DETAILS
13	PIER 1, 2 AND 3 ELEVATION AND PLAN VIEW
14	NORTH ABUTMENT ELEVATION AND PLAN VIEW
15	NORTH ABUTMENT SECTION AND BILL OF BARS
16	NORTH ABUTMENT WING WALL DETAILS
17	RAILING PLAN
18	RAILING ELEVATIONS
19	RAILING BAR DETAILS AND RAILING PLAN
20	FORM LINER DETAILS AND BILL OF BARS
21	STEEL RAILING DETAILS
22	STRIP SEAL EXPANSION JOINTS
23	BEARING DETAILS
24	CONCRETE BLOCK DETAILS

CITY OF MILWAUKEE

REHABILITATION OF

SOUTH 1ST STREET BRIDGE

OVER KINNICKINNIC RIVER

LOCAL STREET

MILWAUKEE COUNTY

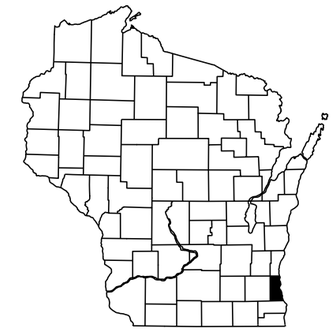

END PROJECT
STA. 9+41.07

STRUCTURE P-40-829
STA. 7+58.21

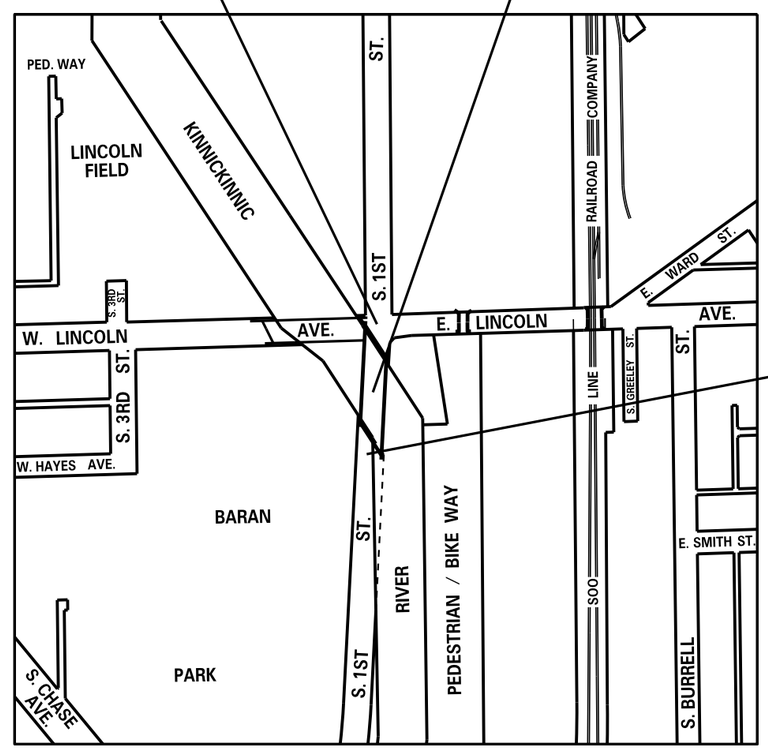

N

BEGIN PROJECT
STA. 5+47.75

SCALE 0 200 400 FEET

TOTAL NET LENGTH OF CENTERLINE = 0.074 MI. (URBAN)

ELEVATIONS SHOWN ON THIS PLAN ARE REFERENCED TO THE CITY OF MILWAUKEE DATUM.

TO CONVERT ELEVATIONS SHOWN ON THIS PLAN TO NATIONAL GEODEDIC VERTICAL DATUM OF 1929, ADD 580.603 TO ELEVATIONS SHOWN ON THIS PLAN.

City of Milwaukee

Department of Public Works

Infrastructure Services Division

APPROVED BY :
STREET & BRIDGE SERVICES MANAGER — DATE 1/22/14
CITY ENGINEER / SPECIAL DEPUTY COMMISSIONER OF PUBLIC WORKS — DATE 1/24/14

SOUTH 1ST STREET BRIDGE
OVER THE KINNICKINNIC RIVER
TITLE SHEET

REVISIONS

DESIGNED BY J.D.T.	
DRAWN BY K.P.S.	
CHECKED BY J.J.K.	
DATE 01/2014	SCALE NONE
JOB NUMBER BR100-14-0104	
SHEET NUMBER C1 OF C7	
OF 36	

W:\STR\B0204\PLANS\ C2.SILTFENCE.DGN 10-24-2013

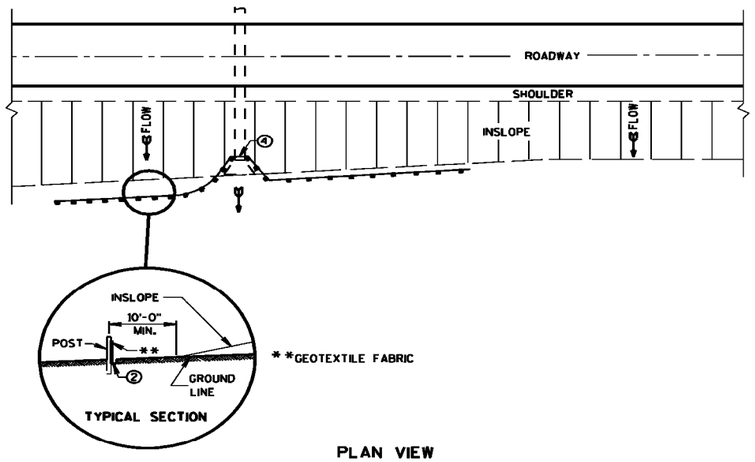

PLAN VIEW

TYPICAL APPLICATION OF SILT FENCE

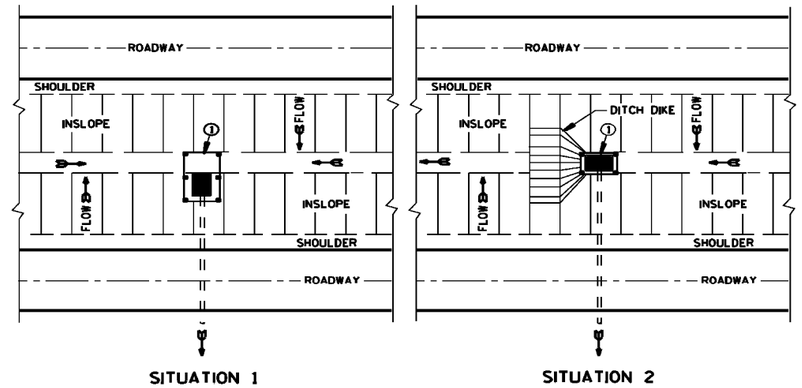

PLAN VIEW

SILT FENCE AT MEDIAN SURFACE DRAINS

GENERAL NOTES

DETAILS OF CONSTRUCTION NOT SHOWN ON THIS DRAWING SHALL CONFORM TO THE PERTINENT REQUIREMENTS OF THE STANDARD SPECIFICATIONS AND APPLICABLE SPECIAL PROVISIONS.

① HORIZONTAL BRACE REQUIRED WITH 2" X 4" WOODEN FRAME OR EQUIVALENT AT TOP OF POSTS.

② FOR MANUAL INSTALLATIONS THE TRENCH SHALL BE A MINIMUM OF 4" WIDE & 6" DEEP TO BURY AND ANCHOR THE GEOTEXTILE FABRIC. FOLD MATERIAL TO FIT TRENCH AND BACKFILL & COMPACT TRENCH WITH EXCAVATED SOIL.

③ WOOD POSTS SHALL BE A MINIMUM SIZE OF 1⅛" X 1⅛" OF OAK OR HICKORY.

④ SILT FENCE TO EXTEND ACROSS THE TOP OF THE PIPE.

⑤ CONSTRUCT SILT FENCE FROM A CONTINUOUS ROLL IF POSSIBLE BY CUTTING LENGTHS TO AVOID JOINTS. IF A JOINT IS NECESSARY USE ONE OF THE FOLLOWING TWO METHODS; A) OVERLAP THE END POSTS AND TWIST, OR ROTATE, AT LEAST 180 DEGREES. B) HOOK THE END OF EACH SILT FENCE LENGTH.

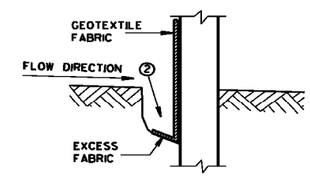

TRENCH DETAIL

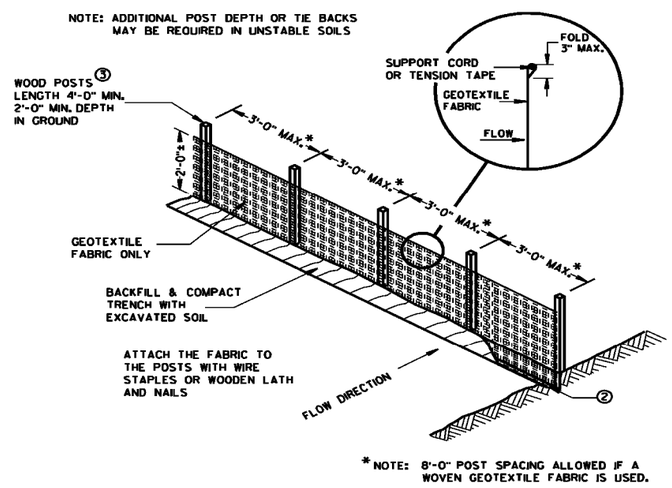

SILT FENCE

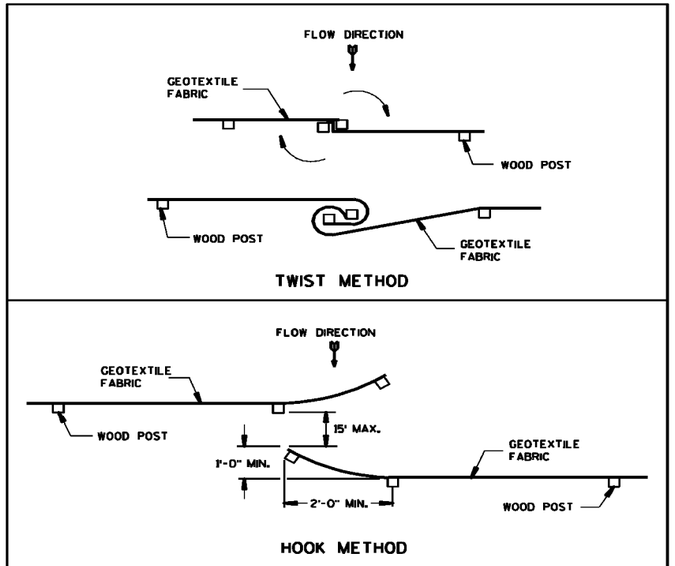

JOINING TWO LENGTHS OF SILT FENCE ⑤

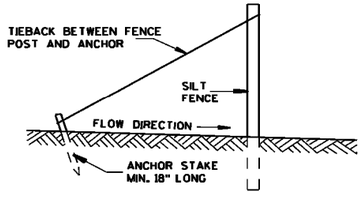

SILT FENCE TIE BACK

(WHEN REQUIRED BY THE ENGINEER)

City of Milwaukee

Department of Public Works

Infrastructure Services Division

SOUTH 1ST STREET BRIDGE
OVER THE KINNICKINNIC RIVER
SILT FENCE

REVISIONS

DESIGNED BY J.D.T.	
DRAWN BY G.J.R.	
CHECKED BY J.J.K.	
DATE 01/2014	SCALE NONE
JOB NUMBER BR100-14-0104	
SHEET NUMBER C2 OF C7	
OF 36	

W:\STR\B0204\PLANS\ C3_CONCRETEPAVEMENTAPPROACH.DGN 10-24-2013

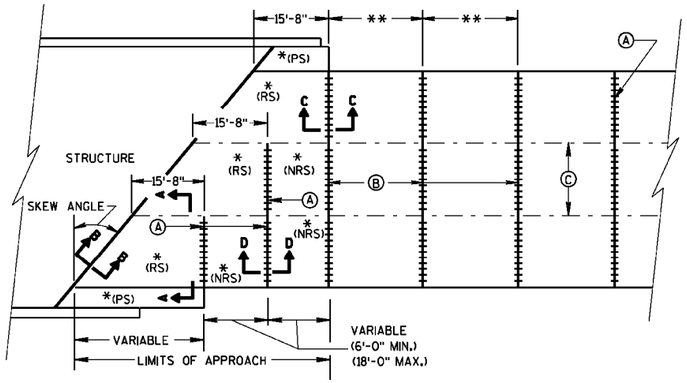

SKEWED APPROACH
(PAVEMENT MORE THAN 2 LANES)

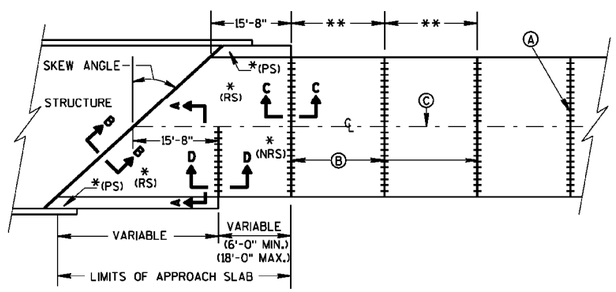

SKEWS >30°
(PAVEMENT WIDTH ≤30')

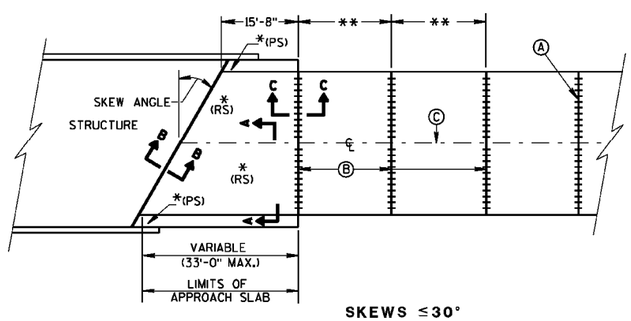

SKEWS ≤30°
(PAVEMENT WIDTH ≤30')

APPROACH SLAB AND ADJACENT PAVEMENT

*(RS) = REINFORCED CONCRETE SLAB
*(PS) = PAVED CONCRETE SHOULDER: CONCRETE PAVEMENT, OR CONCRETE SURFACE DRAIN (SEE DETAILS ELSEWHERE IN THE PLAN)
*(NRS) = NON-REINFORCED CONCRETE SLAB

**STANDARD TRANSVERSE JOINT SPACING (SEE SDD 13C4, SDD 13C11, & SDD 13C13)

Ⓐ STANDARD CONTRACTION JOINT NORMAL TO ℄ OR ℄
Ⓑ 1½" EXPANSION JOINT WITH DOWEL BARS NORMAL TO ℄ OR ℄
Ⓒ STANDARD LONGITUDINAL JOINT AND TIE BARS.

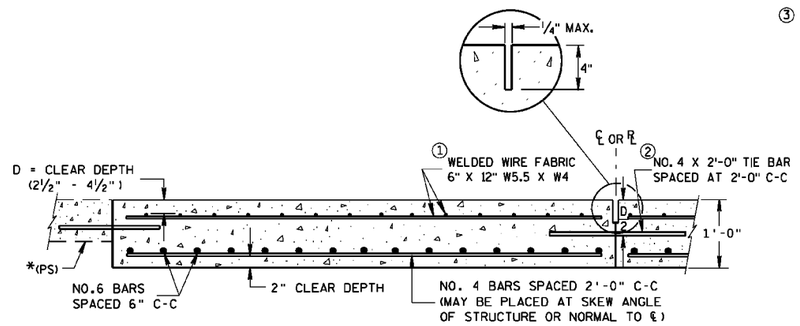

SECTION A-A
REINFORCEMENT POSITIONING DETAIL

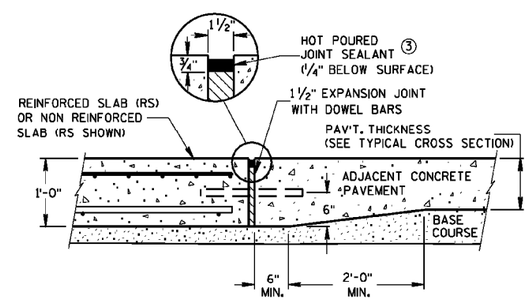

SECTION C-C
TRANSITION DETAIL
APPROACH SLAB TO ADJACENT PAVEMENT

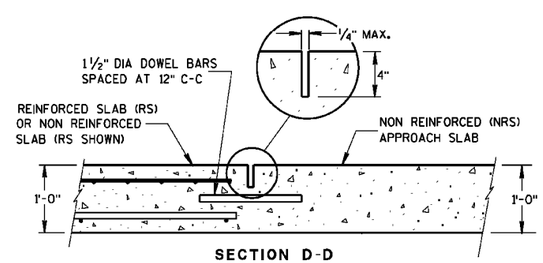

SECTION D-D
CONTRACTION JOINT

GENERAL NOTES

APPROACH SLABS ABUTTING AN HMA PAVEMENT OVER BASE COURSE DO NOT NEED TO BE DOWELED.

THE CONTRACTOR MAY SPLICE NO. 6 BARS IN THE APPROACH SLAB FOR SKEWED STRUCTURES ONLY. STAGGER SPLICES WITH A MAXIMUM OF ONE SPLICE PER BAR. THE LENGTH OF LAP IS 20 INCHES.

① THE CONTRACTOR MAY USE NO. 4 BARS SPACED AT 2'-0" C-C IN BOTH THE LONGITUDINAL AND TRANSVERSE DIRECTIONS FOR TOP REINFORCEMENT AS AN ALTERNATIVE TO THE WELDED WIRE FABRIC.

② THE CONTRACTOR MAY OMIT TIE BARS BETWEEN REINFORCED SLABS WHERE SLAB REINFORCEMENT BARS EXTEND ACROSS THE CENTERLINE OR REFERENCE LINE.

③ USE A JOINT SEALANT MEETING THE REQUIREMENTS OF ASTM D6690.

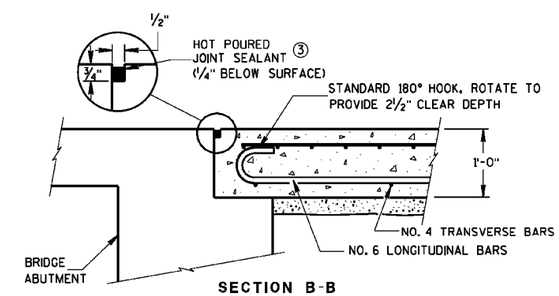

SECTION B-B
BEND DETAIL
BOTTOM REINFORCEMENT

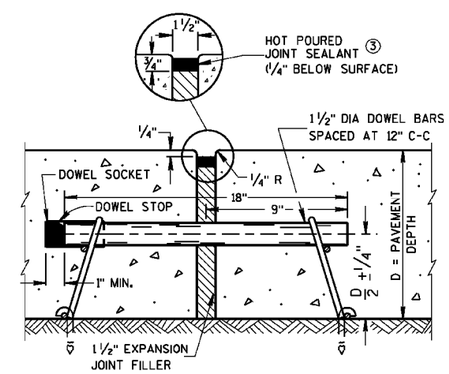

EXPANSION JOINT

City of Milwaukee

Department of Public Works

Infrastructure Services Division

SOUTH 1ST STREET BRIDGE
OVER THE KINNICKINNIC RIVER
CONCRETE PAVEMENT APPROACH SLAB

REVISIONS

DESIGNED BY J.D.T.	
DRAWN BY G.J.R.	
CHECKED BY J.J.K.	
DATE 01/2014	SCALE NONE
JOB NUMBER BR100-14-0104	
SHEET NUMBER C3 OF C7	
OF 36	

W:\STR\B0204\PLANS\ C4_NAMEPLATE.DGN 10-24-2013

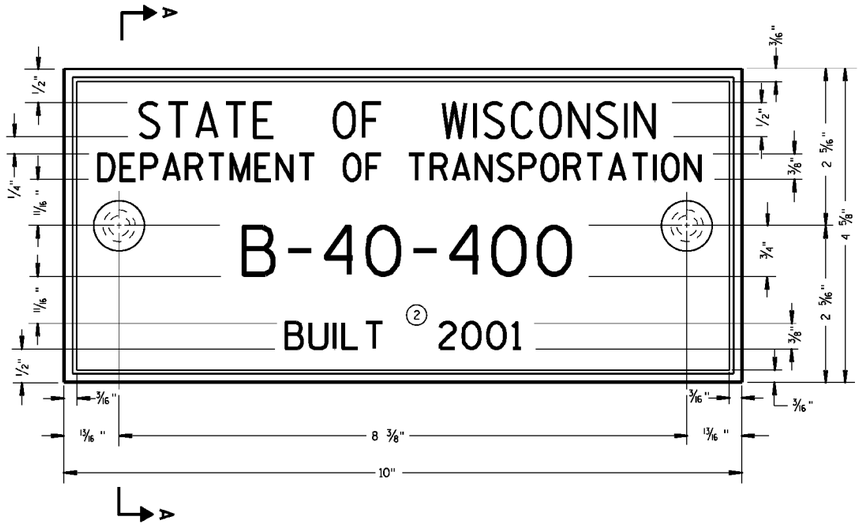

TYPICAL NAME PLATE
(BRIDGES, CULVERTS, AND RETAINING WALLS)

NOTE:

EXISTING BRIDGE NUMBER P-40-829 AND YEAR BUILT 1953

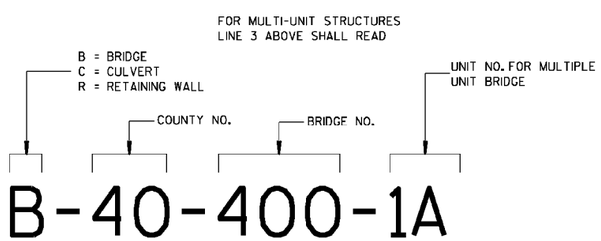

NUMBERING DESIGNATION
MULTI-UNIT STRUCTURES

GENERAL NOTES

NAME PLATES TO BE INSTALLED ON BRIDGES, CULVERTS, AND RETAINING WALLS SHALL CONFORM TO THE REQUIREMENTS OF SECTION 502.3.11 OF THE STANDARD SPECIFICATIONS.

THE BRIDGE NUMBER AND YEAR BUILT SHOWN ON THIS DRAWING ARE EXAMPLES ONLY. SEE CONSTRUCTION PLANS FOR INDIVIDUAL NUMBERING AND YEAR BUILT.

① EPOXY RESIN SHALL BE FROM AN APPROVED MANUFACTURER AND USED IN ACCORDANCE WITH MANUFACTURER'S RECOMMENDATIONS.

② REHABILITATION OF AN EXISTING STRUCTURE SHOULD USE THE DATE OF ORIGINAL STRUCTURE CONSTRUCTION.

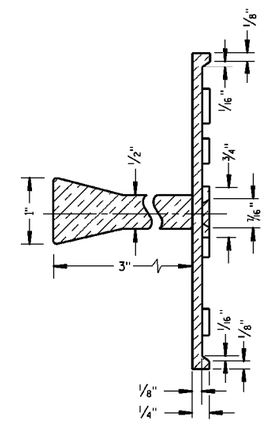

SECTION A-A

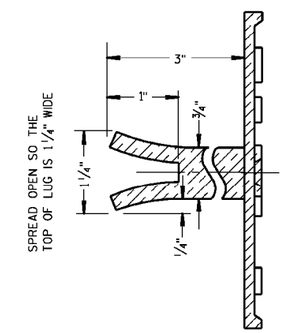

ALTERNATE LUG

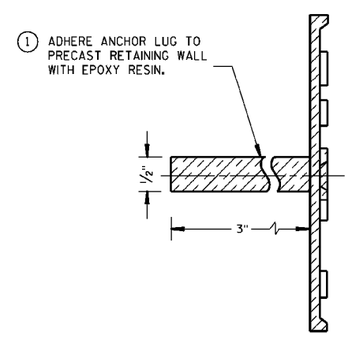

ALTERNATE LUG
(FOR ATTACHMENT TO PRECAST STRUCTURES)

City of Milwaukee

Department of Public Works

Infrastructure Services Division

SOUTH 1ST STREET BRIDGE
OVER THE KINNICKINNIC RIVER
NAME PLATE

REVISIONS

DESIGNED BY J.D.T.	
DRAWN BY G.J.R.	
CHECKED BY J.J.K.	
DATE 01/2014	SCALE NONE
JOB NUMBER BR100-14-0104	
SHEET NUMBER C4 OF C7	
OF 36	

W:\STR\B0204\PLANS\ C5_TURBIDITY.DGN 12-10-2013

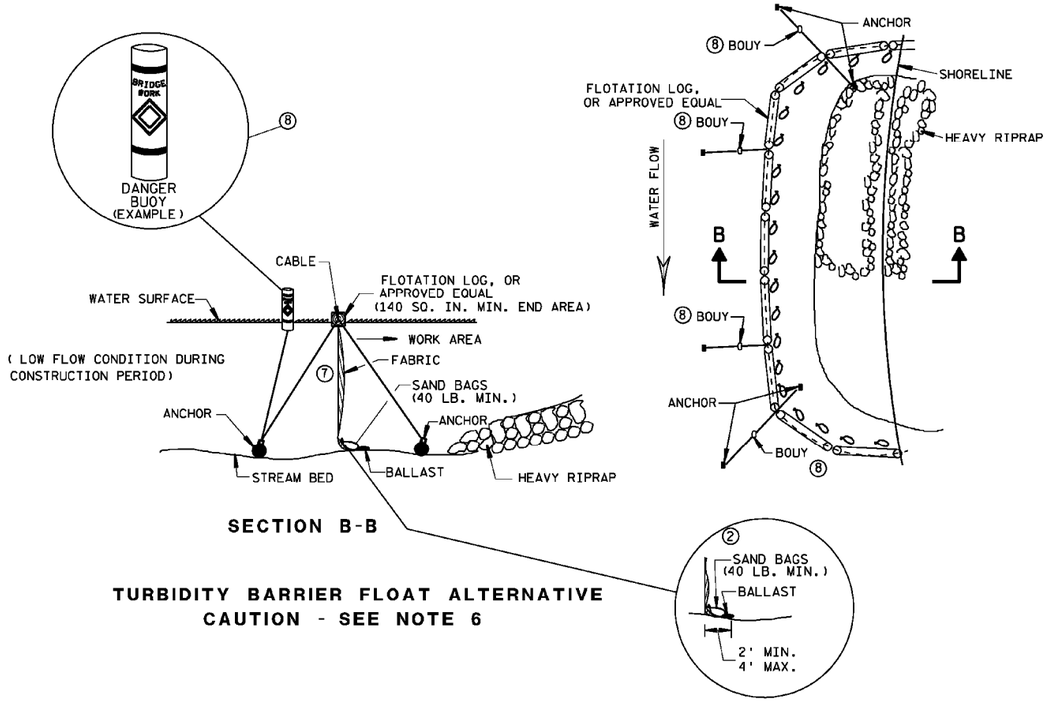

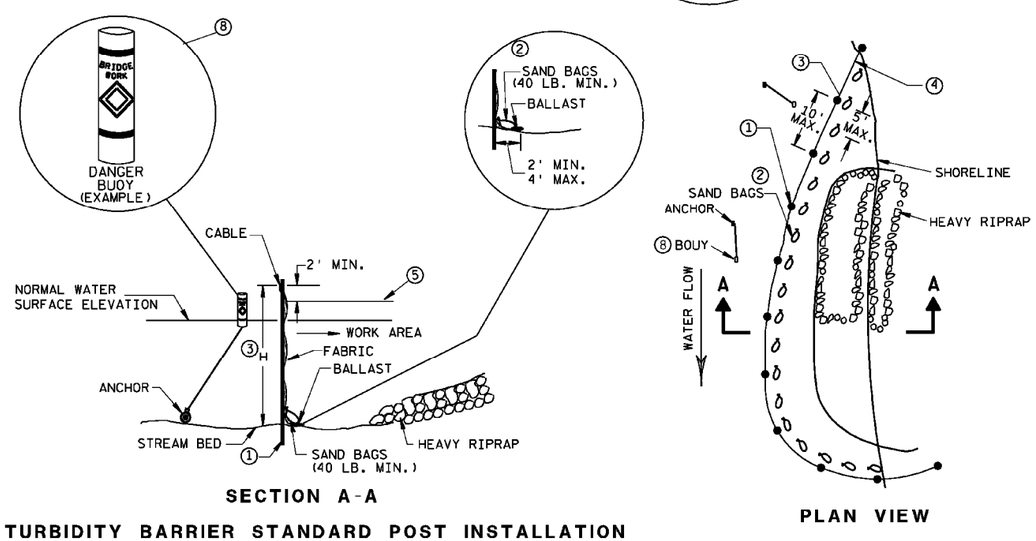

TURBIDITY BARRIER PLACEMENT DETAILS

GENERAL NOTES

DETAILS OF CONSTRUCTION, MATERIALS AND WORKMANSHIP NOT SHOWN ON THIS DRAWING SHALL CONFORM TO THE PERTINENT REQUIREMENTS OF THE STANDARD SPECIFICATIONS AND THE APPLICABLE SPECIAL PROVISIONS.

TURBIDITY BARRIER MAY BE REMOVED AT THE ENGINEERS DISCRETION, WHEN PERMANENT EROSION CONTROL MEASURES HAVE BEEN ESTABLISHED.

① DRIVEN STEEL POSTS, PIPES, OR CHANNELS. LENGTH SHALL BE SUFFICIENT TO SECURELY SUPPORT BARRIER AT HIGH WATER ELEVATIONS.

② SANDBAGS TO BE USED AS ADDITIONAL BALLAST WHEN ORDERED BY THE ENGINEER TO MEET ADVERSE FIELD CONDITIONS. SPACE AS APPROPRIATE FOR SITE CONDITIONS.

③ WHEN BARRIER HEIGHT, H, EXCEEDS 8 FT., POST SPACING MAY NEED TO BE DECREASED.

④ IN WATERWAYS SUBJECT TO FLUCTUATING WATER ELEVATIONS, PROVISIONS SHOULD BE MADE TO ALLOW THE WATER TO EQUALIZE ON EACH SIDE OF THE BARRIER. THIS MAY BE ACCOMPLISHED BY LEAVING A PORTION OF THE BARRIER OPEN ON THE UPSTREAM END.

⑤ ESTIMATED HIGH WATER ELEVATION DURING CONSTRUCTION PERIOD. MIMIMUM BARRIER HEIGHT SHALL BE 2'GREATER THAN EITHER THE Q2 ELEVATION OR THE ESTIMATED HIGH WATER ELEVATION DURING CONSTRUCTION, WICHEVER IS GREATER.

⑥ FLOAT ALTERNATIVE WILL ONLY BE ALLOWED WITH WRITTEN APPROVAL OF THE ENGINEER, AND IS MEANT FOR LOCATIONS WHERE BED ROCK PREVENTS THE INSTALLATION OF POSTS.

⑦ ALLOW SUFFICIENT SLACK VERTICALLY AND HORIZONTALLY SO THAT SEDIMENT BUILD UP WILL NOT SEPARATE OR LOWER THE TURBIDITY BARRIER.

⑧ USE AS DIRECTED BY COAST GUARD OR DNR PERMIT WHEN WORKING IN NAVIGABLE WATERWAYS.

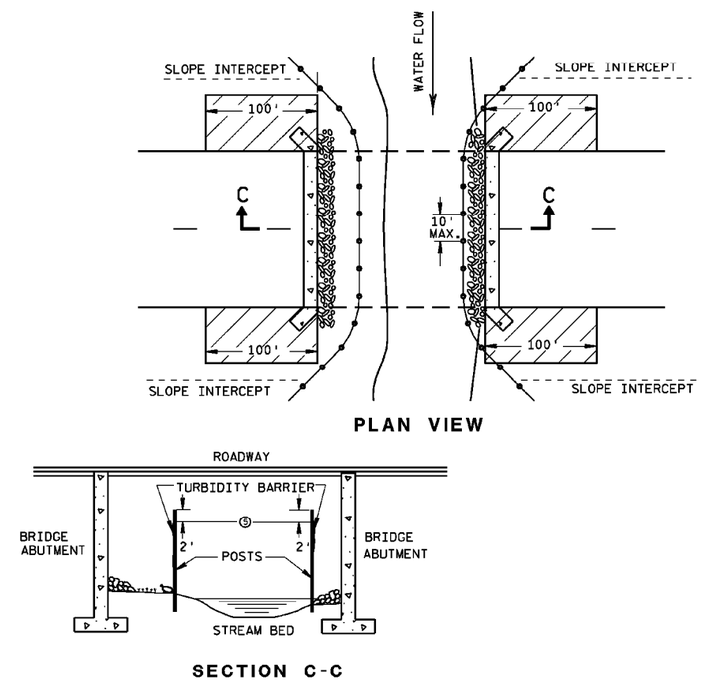

TURBIDITY BARRIER DETAIL SHOWING TYPICAL PLACEMENT AT STRUCTURES

City of Milwaukee

Department of Public Works

Infrastructure Services Division

SOUTH 1ST STREET BRIDGE
OVER THE KINNICKINNIC RIVER
TURBIDITY BARRIER

REVISIONS

DESIGNED BY J.D.T.	
DRAWN BY G.J.R.	
CHECKED BY J.J.K.	
DATE 01/2014	SCALE NONE
JOB NUMBER BR100-14-0104	
SHEET NUMBER C5 OF C7	
OF 36	

W:\STR\B0204\PLANS\ C6_CATCH BASIN.DGN 12-17-2013

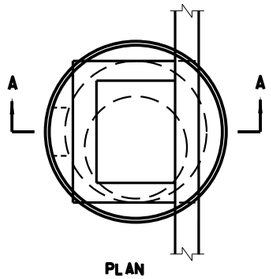

PLAN

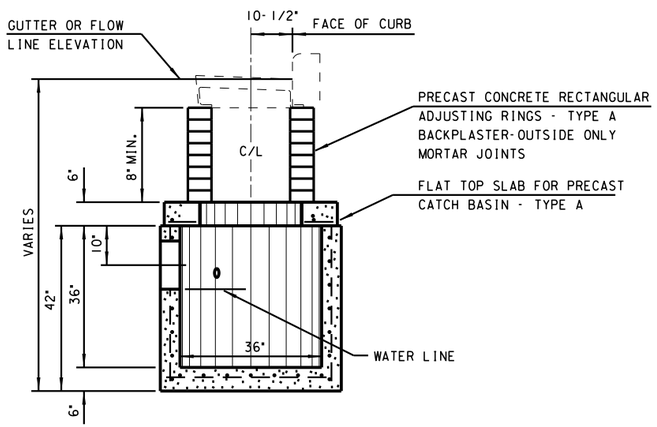

SECTION A-A

CATCH BASIN - TYPE 45A

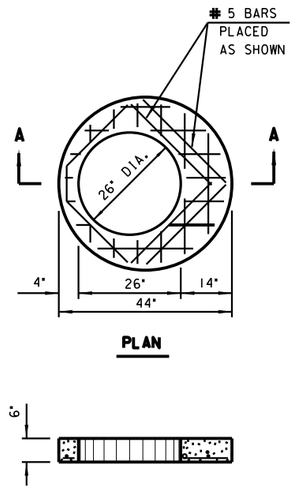

PLAN

SECTION A-A

TOP SLAB - TYPE A

FLAT TOP SLAB SHALL BE 6" THICK REINFORCED WITH ONE LAYER OF STEEL WITH A MINIMUM AREA OF 0.32 SQ. IN. PER LINEAL FOOT IN BOTH DIRECTIONS, PLACED NEAR THE BOTTOM OF THE SLAB WITH 1" CLEAR COVER.

ADDITIONALLY, NO. 5 BARS SHALL BE PLACED AROUND TOP SLAB OPENING AS SHOWN.

REINFORCEMENT SHALL BE TIED OR WELDED TOGETHER.

THE MINIMUM COMPRESSIVE STRENGTH OF THE CONCRETE SHALL BE 4000 P.S.I.

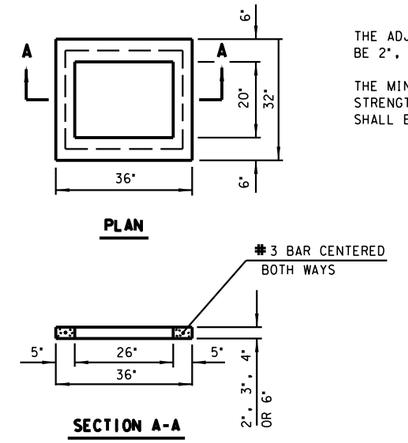

PLAN

SECTION A-A

RECTANGULAR ADJUSTING RING - TYPE A

THE ADJUSTING RINGS SHALL BE 2", 3", 4" OR 6" IN HEIGHT.

THE MINIMUM COMPRESSIVE STRENGTH OF THE CONCRETE SHALL BE 3300 P.S.I.

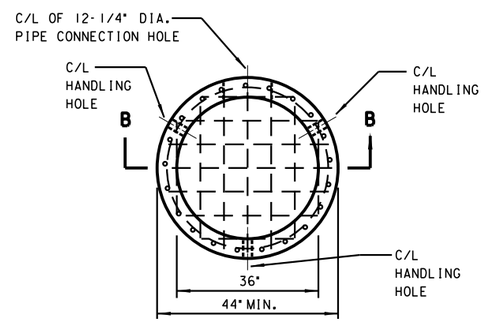

RISER SECTION WITH INTEGRAL BASE PLAN

CIRCUMFERENTIAL AND LONGITUDINAL REINFORCEMENT IN THE RISER SECTON SHALL EACH CONSIST OF ONE LAYER OF STEEL NOT LESS THAN 0.12 SQ. IN. PER FOOT AND SHALL BE PLACED IN THE CENTER THIRD OF THE WALL.

THE BASE SLAB SHALL BE REINFORCED WITH ONE LAYER OF STEEL WITH A MINIMUM AREA OF 0.32 SQ. IN. PER FOOT IN BOTH DIRECTIONS, PLACED ABOVE THE MIDPOINT OF THE SLAB.

RISER SECTION AND BASE SLAB REINFORCEMENT SHALL BE TIED OR WELDED TOGETHER.

TWO TO THREE HANDLING HOLES 2-1/4" IN DIAMETER AND A PIPE CONNECTION HOLE 12-1/4" IN DIAMETER SHALL BE CAST OR CORED IN THE RISER SECTION AT THE LOCATIONS SHOWN. LIFTING DEVICES MAY BE SUBSTITUTED FOR HANDLING HOLES.

NO JOINTS OR HOLES SHALL BE BELOW THE WATERLINE.

THE MINIMUM COMPRESSIVE STRENGTH OF THE CONCRETE SHALL BE 4000 P.S.I.

RISER SECTION MAY TAPER TO A 33" INTERNAL DIAMETER AT IT'S BOTTOM PROVIDED A 44" MINIMUM OUTSIDE DIAMETER IS MAINTAINED.

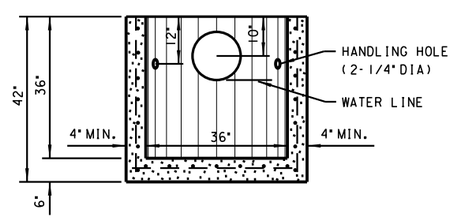

SECTION B-B

GENERAL NOTES

1. PRECAST INLET UNITS AND BASES SHALL CONFORM TO THE PERTINENT REQUIREMENTS OF AASHTO DESIGNATION M199 AND ASTM DESIGNATION C-478 AND THESE DETAILED REQUIREMENTS WHICH SHALL GOVERN WHERE THEY ALTER THE AASHTO AND ASTM STANDARDS.
2. ALL REINFORCEMENT STEEL SHALL BE GRADE 60 OR GREATER AND EMBEDDED AT LEAST 1" CLEAR.
3. PRECAST REINFORCED BASES SHALL BE PLACED ON A BED OF MATERIAL AT LEAST 4 IN DEPTH WHICH MEETS REQUIREMENTS FOR GRANULAR BACKFILL. THIS BEDDING SHALL BE COMPACTED AND PROVIDE UNIFORM SUPPORT FOR THE ENTIRE AREA OF THE BASE.
4. SET FRAME ELEVATION 0.03 FT. LOWER THAN ELEVATION INDICATED ON PLAN.

City of Milwaukee

Department of Public Works

Infrastructure Services Division

SOUTH 1ST STREET BRIDGE
OVER THE KINNICKINNIC RIVER
CATCH BASIN

REVISIONS

DESIGNED BY K.D.	
DRAWN BY G.J.R.	
CHECKED BY K.D.	
DATE 01/2014	SCALE NONE
JOB NUMBER BR100-14-0104	
SHEET NUMBER C6 OF C7	
OF 36	

W:\STR\B0204\PLANS\ C7_INLET COVER.DGN 12-17-2013

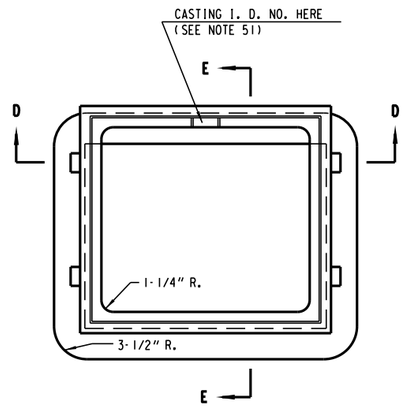

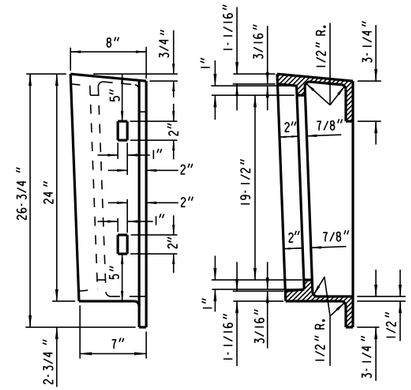

SECTION E-E

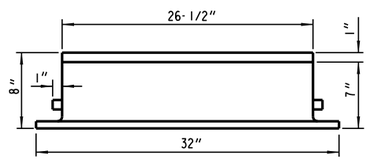

FRAME

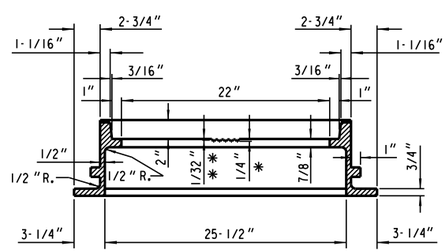

SECTION D-D

* DEPRESSION FOR LETTERS

* * CLEARANCE FROM TOP OF LETTERS TO FACE OF SEAT

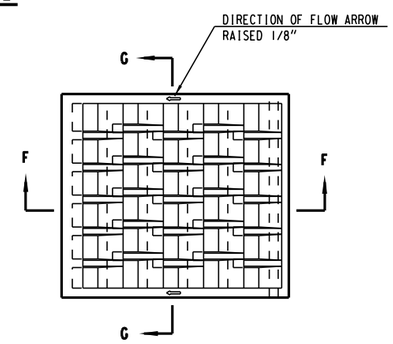

GRATE

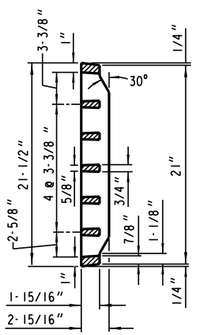

SECTION G-G

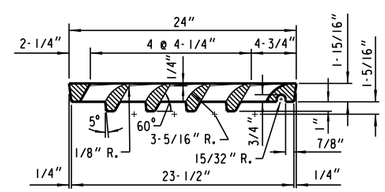

SECTION F-F

GENERAL NOTES

ALL EDGES ARE TO BE GROUND

ALL CASTINGS SHALL BEAR THE FOLLOWING IDENTIFICATION MARKS IN THE FORM OF LEGIBLE LETTERS OR NUMERALS RAISED 1/8"

ON THE FRAME

1. ON THE UPPER FACE OF THE FLANGE IN 1 INCH HIGH LETTERS THE INITIALS OR MONOGRAM OF THE FOUNDRY, THE YEAR MADE AND THE SERIAL NUMBER OF THE INDIVIDUAL CASTING.
2. ON THE SEAT OF THE FRAME IN 1 INCH HIGH LETTERS, THE CASTING IDENTIFICATION NUMBER (51).

ON THE GRATE

1. ON THE UPPER SIDE OF THE GRATE IN 1 INCH HIGH LETTERS, THE INITIALS OR MONOGRAM OF THE FOUNDRY, THE YEAR MADE, THE CASTING IDENTIFICATION NUMBER (57) AND THE SERIAL NUMBER OF THE INDIVIDUAL CASTING.

INLET COVER - TYPE 57

LID-145 LBS., FRAME-204 LBS.

City of Milwaukee

Department of Public Works

Infrastructure Services Division

SOUTH 1ST STREET BRIDGE
OVER THE KINNICKINNIC RIVER
INLET COVER

REVISIONS

DESIGNED BY K.D.	
DRAWN BY G.J.R.	
CHECKED BY K.D.	
DATE 01/2014	SCALE NONE
JOB NUMBER BR100-14-0104	
SHEET NUMBER C7 OF C7	
OF 36	

W:\STR\B0204\PLANS\T1_TRAFFIC.DGN

STAGE I

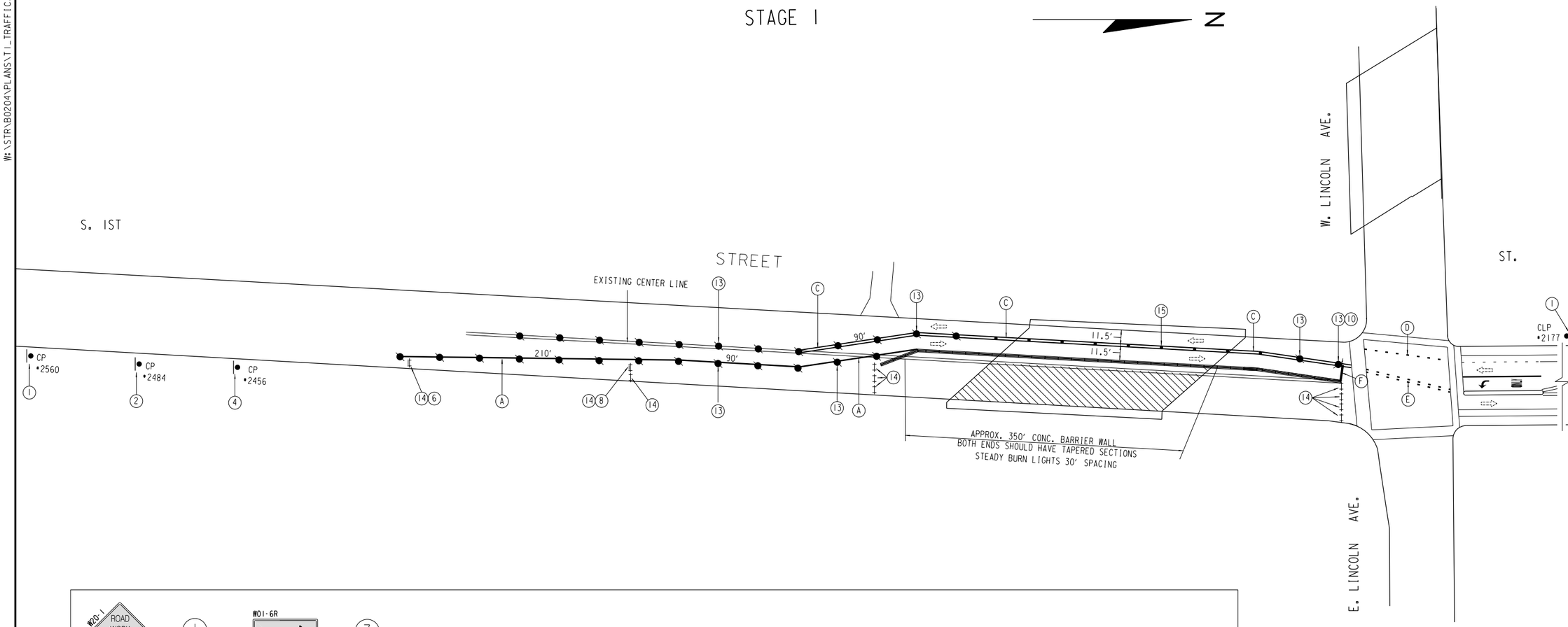

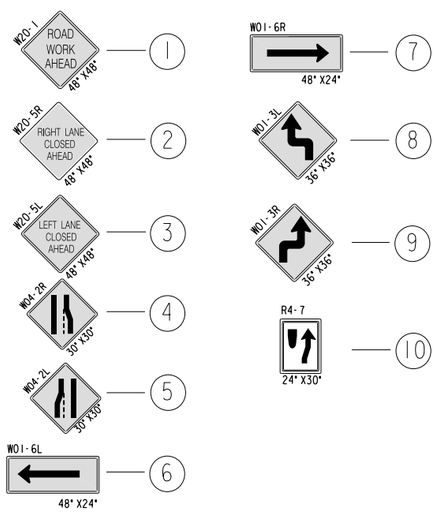

DRUMS W/LIGHTS 30' SPACING — 13

VERTICAL TUBULAR MARKERS 20' SPACING — 15

SIGNS BANDED TO UTILITY, CONCRETE OR OTHER POLE

WORK AREA

DIRECTION OF TRAFFIC

TYPE III BARRICADES — 14

TYPE III BARRICADES W/ SIGN — 14 + X

CONCRETE BARRIER WALL(PINNED) W/ LIGHTS (30' SPACING)

A TPM, REMOVABLE TAPE, 4" WHITE

B TPM, REMOVABLE TAPE, 4" YELLOW

C TPM, REMOVABLE TAPE, 4" DOUBLE YELLOW

D TPM, REMOVABLE TAPE, 4" WHITE. 2' LINE 6' SKIP

E TPM, REMOVABLE TAPE, 4" DOUBLE YELLOW. 2' LINE 6' SKIP

F TPM, REMOVABLE TAPE, 24" WHITE

M MATCH TO EXISTING

NOTE: ALL SIGNING SHALL BE THE CONTRACTORS RESPONSIBILITY.

ALL SIGNS SHALL BE BANDED TO EXISTING UTILITY POLES UNLESS OTHERWISE NOTED.

CONTRACTOR RESPONSIBLE FOR COVERING ALL CONFLICTING PAVEMENT MARKINGS.

City of Milwaukee

Department of Public Works

Infrastructure Services Division

SOUTH 1ST STREET BRIDGE
OVER THE KINNICKINNIC RIVER
TRAFFIC CONTROL - STAGE I

REVISIONS

DESIGNED BY J.B.

DRAWN BY D.B.

CHECKED BY J.B.

DATE 01/2014 | SCALE NONE

JOB NUMBER BR100-14-0104

SHEET NUMBER T1 OF T5

OF 36

W:\STR\B0204\PLANS\T2_TRAFFIC.DGN

STAGE 2

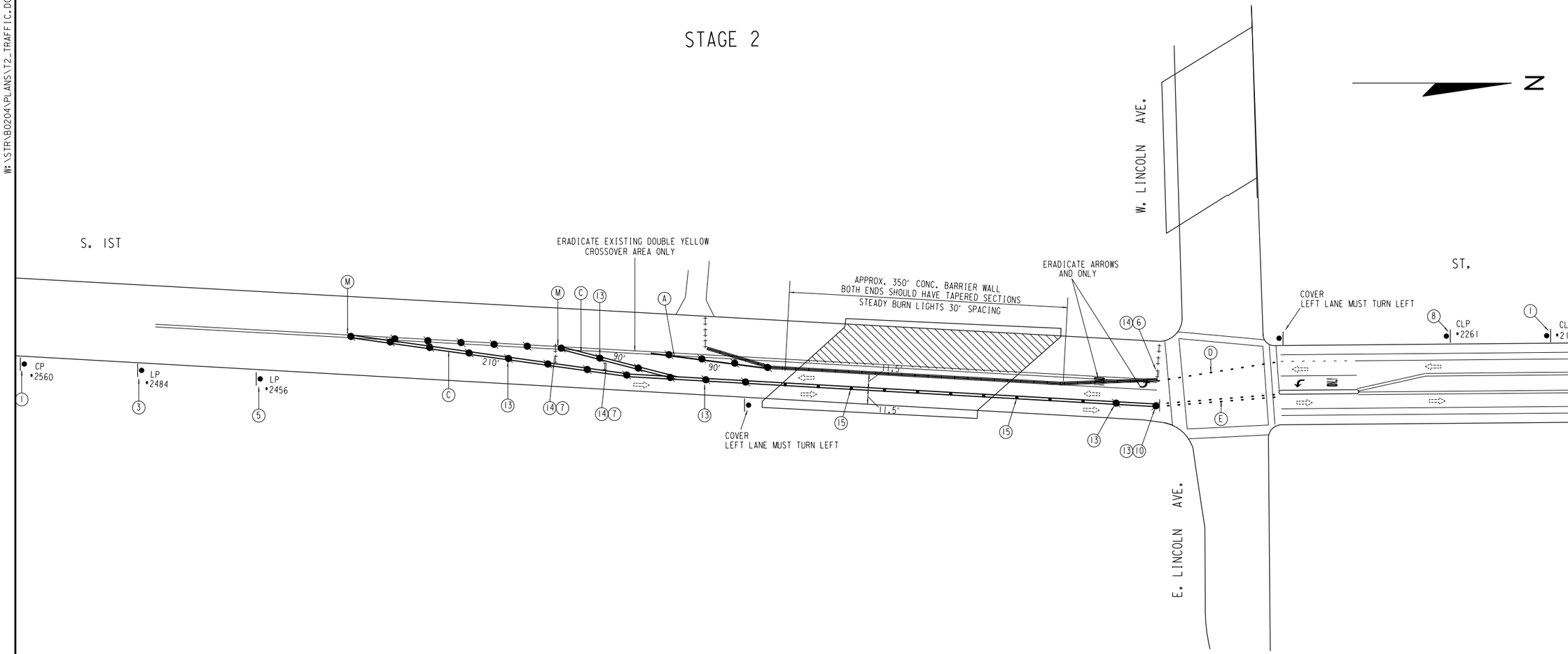

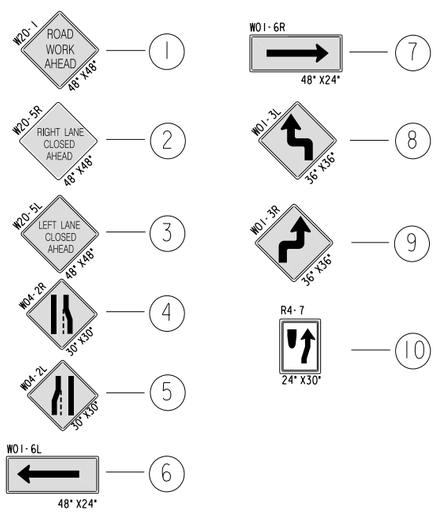

DRUMS W/LIGHTS 30' SPACING — (13)

VERTICAL TUBULAR MARKERS 20' SPACING — (15)

SIGNS BANDED TO UTILITY, CONCRETE OR OTHER POLE

WORK AREA

DIRECTION OF TRAFFIC

TYPE III BARRICADES — (14)

TYPE III BARRICADES W/ SIGN — (14)+(X)

CONCRETE BARRIER WALL(PINNED) W/ LIGHTS (30' SPACING)

(A) TPM, REMOVABLE TAPE, 4" WHITE

(B) TPM, REMOVABLE TAPE, 4" YELLOW

(C) TPM, REMOVABLE TAPE, 4" DOUBLE YELLOW

(D) TPM, REMOVABLE TAPE, 4" WHITE. 2' LINE 6' SKIP

(E) TPM, REMOVABLE TAPE, 4" DOUBLE YELLOW. 2' LINE 6' SKIP

(M) MATCH TO EXISTING

NOTE: ALL SIGNING SHALL BE THE CONTRACTORS RESPONSIBILITY.

ALL SIGNS SHALL BE BANDED TO EXISTING UTILITY POLES UNLESS OTHERWISE NOTED.

CONTRACTOR RESPONSIBLE FOR COVERING ALL CONFLICTING PAVEMENT MARKINGS.

City of Milwaukee

Department of Public Works

Infrastructure Services Division

SOUTH 1ST STREET BRIDGE
OVER THE KINNICKINNIC RIVER
TRAFFIC CONTROL - STAGE 2

REVISIONS

DESIGNED BY J.B.

DRAWN BY D.B.

CHECKED BY J.B.

DATE 01/2014 | SCALE NONE

JOB NUMBER BR100-14-0104

SHEET NUMBER T2 OF T5

OF 36

W:\STR\B0204\PLANS\T3_PAVEMARK.DGN

PAVEMENT MARKING

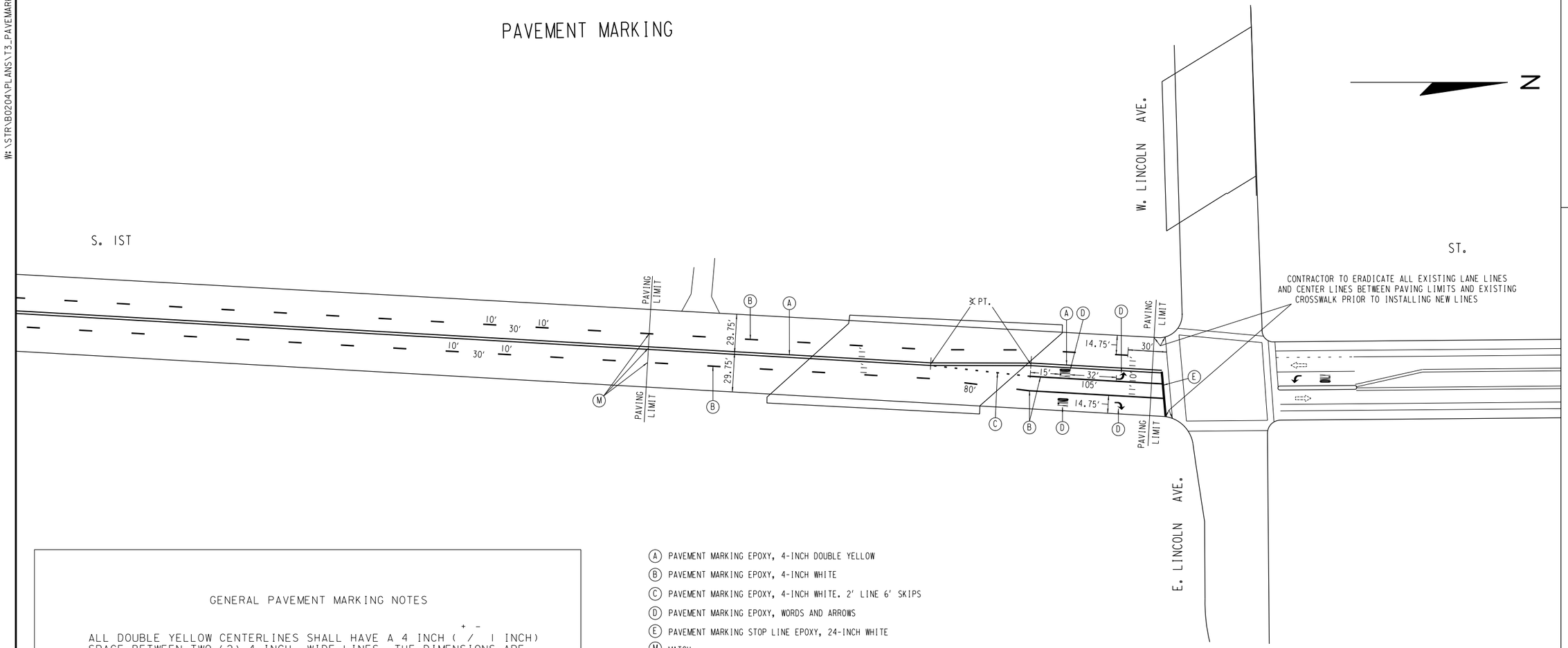

(A) PAVEMENT MARKING EPOXY, 4-INCH DOUBLE YELLOW

(B) PAVEMENT MARKING EPOXY, 4-INCH WHITE

(C) PAVEMENT MARKING EPOXY, 4-INCH WHITE. 2' LINE 6' SKIPS

(D) PAVEMENT MARKING EPOXY, WORDS AND ARROWS

(E) PAVEMENT MARKING STOP LINE EPOXY, 24-INCH WHITE

(M) MATCH

GENERAL PAVEMENT MARKING NOTES

ALL DOUBLE YELLOW CENTERLINES SHALL HAVE A 4 INCH (+ / - 1 INCH) SPACE BETWEEN TWO (2) 4 INCH WIDE LINES. THE DIMENSIONS ARE FROM FACE OF CURB TO THE CENTER OF THE 4 INCH SPACE, UNLESS OTHERWISE NOTED.

ALL WHITE LANE LINES SHALL BE 4 INCHES WIDE, 10 FEET LONG WITH A 30 FOOT SPACING. THE DIMENSIONS ARE FROM THE FACE OF CURB TO CENTER OF PAVEMENT MARKING, UNLESS OTHERWISE NOTED.

ALL WHITE STOP LINES ARE 24 INCHES WIDE.

ALL PAVEMENT MARKINGS ARE TO BE EPOXY.

INCLUDE SANDBLASTING PRIOR TO INSTALLATION OF PAVEMENT MARKINGS.

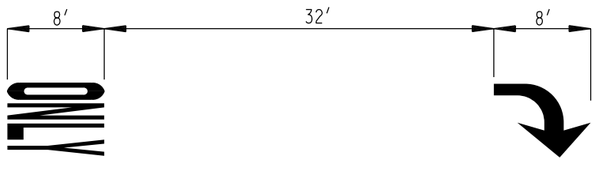

TYPICAL DETAIL
ARROW AND ONLY

City of Milwaukee

Department of Public Works

Infrastructure Services Division

SOUTH 1ST STREET BRIDGE
OVER THE KINNICKINNIC RIVER
PAVEMENT MARKING

REVISIONS

DESIGNED BY J.B.	
DRAWN BY D.B.	
CHECKED BY J.B.	
DATE 01/2014	SCALE NONE
JOB NUMBER BR100-14-0104	
SHEET NUMBER T3 OF T5	
OF 36	

W:\STR\B0204\PLANS\T4_DETOUR.DGN

DETOUR MAP FOR CLOSURE

(REQUIRED FOR 7 DAYS AFTER EACH BRIDGE DECK POUR FOR STAGE 1 AND 2)

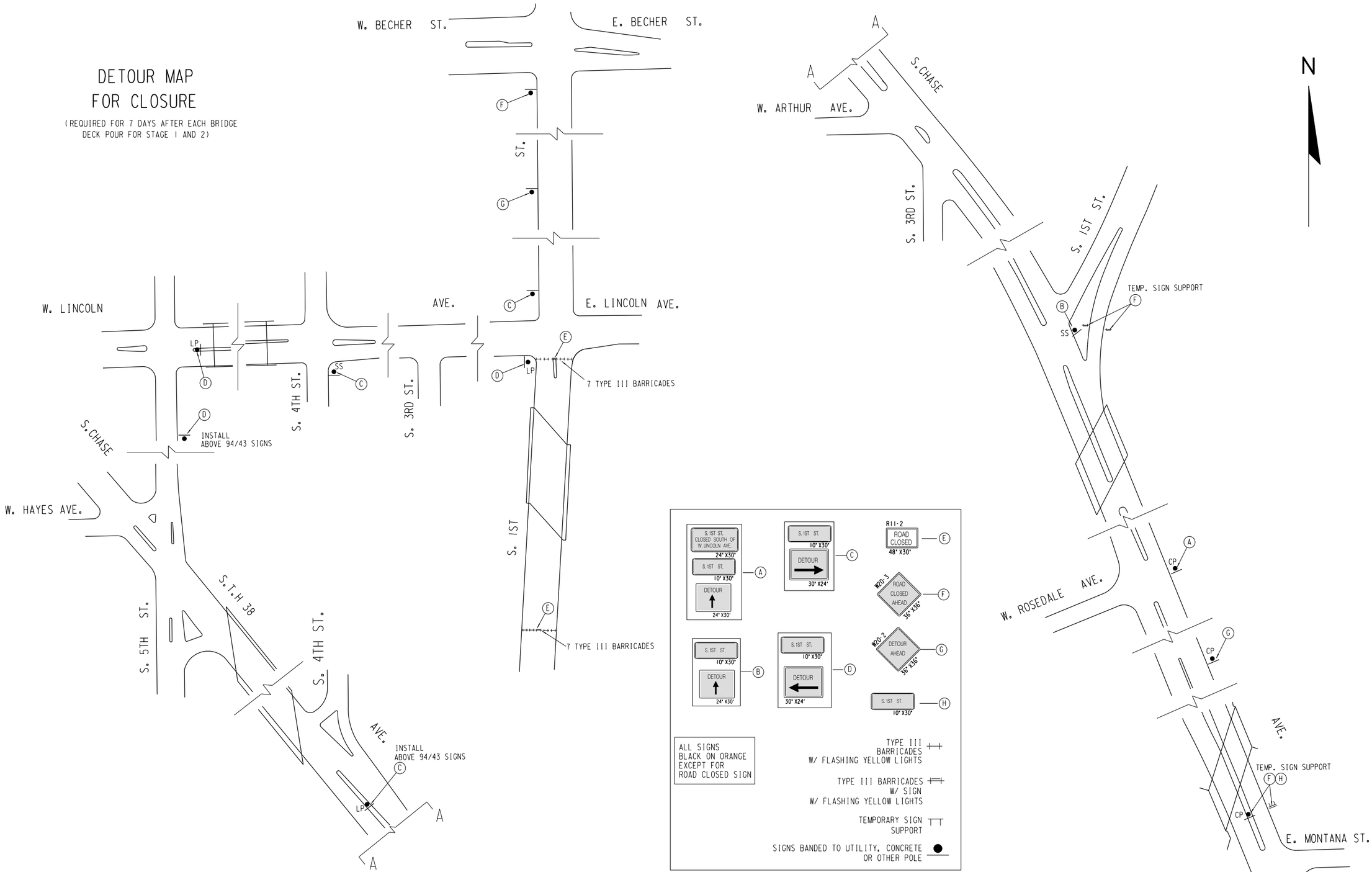

City of Milwaukee

Department of Public Works

Infrastructure Services Division

SOUTH 1ST STREET BRIDGE
OVER THE KINNICKINNIC RIVER
DETOUR PLAN

REVISIONS

DESIGNED BY J.B.	
DRAWN BY D.B.	
CHECKED BY J.B.	
DATE 01/2014	SCALE NONE
JOB NUMBER BR100-14-0104	
SHEET NUMBER T4 OF T5	
OF 36	

W:\STR\B0204\PLANS\T5_QUANTITIES.DGN

ESTIMATE OF TRAFFIC CONTROL ITEMS REQUIRED

	ITEMS	STAGE 1 80 DAYS (EACH)	(DAYS)	STAGE 2 80 DAYS (EACH)	(DAYS)	BRIDGE CLOSURE 20 DAYS (EACH)	(DAYS)	TOTAL (DAYS)
① 643.0300	TRAFFIC CONTROL, DRUMS	27	2,160	25	2,000	-	-	4,160
② 643.0420	TRAFFIC CONTROL, BARRICADES, TYPE III	10	800	6	480	13	260	1,540
643.0705	TRAFFIC CONTROL, WARNING LIGHTS, TYPE "A" (FLASHING)	20	1,600	12	960	26	520	3,080
643.0715	TRAFFIC CONTROL, WARNING LIGHTS, TYPE "C" (STEADY)	39	3,120	37	2,960	-	-	6,080
643.0900	TRAFFIC CONTROL, SIGNS	7	560	9	720	25	2,000	3,280
603.8000	CONCRETE BARRIER TEMPORARY PRECAST DELIVERED	350 L.F.		342 L.F.		0 L.F.		692 L.F.
603.8125	CONCRETE BARRIER TEMPORARY PRECAST INSTALLED	350 L.F.		342 L.F.		0 L.F.		692 L.F.
643.0500	TRAFFIC CONTROL FLEXIBLE TUBULAR MARKER POSTS	9 EACH		15 EACH		0 EACH		24 EACH
649.0600	TRAFFIC CONTROL FLEXIBLE TUBULAR MARKER BASES	9 EACH		15 EACH		0 EACH		24 EACH
③ 649.0400	TEMPORARY PAVEMENT MARKING REMOVABLE TAPE 4-INCH	860 L.F.		90 L.F.		0 L.F.		2,418 L.F.
649.1400	TEMPORARY PAVEMENT MARKING STOP LINE REMOVABLE TAPE 24-INCH	12 L.F.		26 L.F.		0 L.F.		12 L.F.

NOTES:

THE EXACT NUMBER, LOCATION AND SPACING OF ALL SIGNS AND DEVICES SHALL BE ADJUSTED TO FIT FIELD CONDITIONS AS APPROVED BY THE ENGINEER.
ALL SIGNS ARE 48" X 48" UNLESS OTHERWISE NOTED.
"WO" SIGNS ARE THE SAME AS "W" SIGNS EXCEPT THE BACKGROUND IS ORANGE.
ANY SIGNS TEMPORARY OR EXISTING, WHICH CONFLICT WITH TRAFFIC CONTOL "IN USE" WILL BE COVERED AS NEEDED AND AS APPROVED BY THE ENGINEER.
THIS WORK WILL BE INCIDENTAL TO THE ITEM OF TRAFFIC CONTROL.

CHANNELIZING DEVICES PLACED ADJACENT TO THE WORK AREA SHALL BE PULLED BACK FROM THE TRAVELED LANE WHEN WORK IS NOT IN PROGRESS.

WARNING SIGNS THAT WILL BE IN PLACE LESS THAN SEVEN CONTINUOUS DAYS AND NIGHTS MAY BE MOUNTED ON PORTABLE SUOPORTS.

① ALL DRUMS HAVE ONE STEADY BURNING YELLOW LIGHT
② ALL TYPE III BARRICADES HAVE 2 FLASHING YELLOW LIGHTS
③ WHEN PLACING TEMPORARY PAVEMENT MARKING REMOVABLE TAPE, THE TAPE SHALL BE SLICED OR CUT ACROSS ITS WIDTH EVERY 25 FEET. THIS WILL LIMIT RAVELING.

ITEMS	STAGE 1	STAGE 2	BRIDGE CLOSURE	SIZE (")
W20-1	2	2	0	48 X 48
W20-5R	3	1	3	48 X 48
W20-5L	0	1	0	48 X 48
WO4-2R	1	4	1	30 X 30
WO4-2L	3	1	3	48 X 48
WO1-6L	0	1	0	48 X 24
WO1-6R	0	1	0	48 X 24
WO1-3L	0	1	0	48 X 48
R4-7	9	8	9	24 X 30
R11-2	2	0	2	48 X 30
W20-3	2	0	2	36 X 36
W20-2	2	0	2	38 X 38
S. 1ST ST. CLOSED SOUTH OF W. LINCOLN AVE	4	4	4	24 X 30
S. 1ST ST.	2	1	2	10 X 30
DETOUR (UP ARROW)	2	3	2	24 X 30
DETOUR (RIGHT ARROW)	2	2	2	30 X 24
DETOUR (LEFT ARROW)	1	1	1	30 X 24
TOTAL	35	31	33	

PAVEMENT MARKING QUANTITIES

STATION	PAVEMENT MARKING EPOXY 4- INCH ITEM 646.0106	PAVEMENT MARKING EPOXY 6- INCH ITEM 646.0116	PAVEMENT MARKING EPOXY 16- INCH ITEM 646.0146	PAVEMENT MARKING ARROWS EPOXY TYPE 2 ITEM 647.0166	PAVEMENT MARKING ARROWS BIKE LANE EPOXY ITEM 647.0206	PAVEMENT MARKING SYMBOLS BIKE LANE EPOXY ITEM 647.0306	PAVEMENT MARKING WORDS EPOXY ITEM 647.0356	PAVEMENT MARKING STOPLINE EPOXY 24- INCH ITEM 647.0576	PAVEMENT MARKING CROSSWALK EPOXY 12- INCH ITEM 647.0776
	L.F.	L.F.	L.F.	EACH	EACH	EACH	EACH	L.F.	L.F.
05+47.74 TO 09+51.47	796			2			2	35	
TOTAL	796			2			2	35	

City of Milwaukee

Department of Public Works

Infrastructure Services Division

SOUTH 1ST STREET BRIDGE
OVER THE KINNICKINNIC RIVER
TRAFFIC QUANTITIES

REVISIONS

DESIGNED BY J.R.
DRAWN BY G.J.R.
CHECKED BY J.J.K.
DATE 01/2014
SCALE NONE
JOB NUMBER BR100-14-0104
SHEET NUMBER T5 OF T5
OF 36

W:\STR\B0204\PLANS\ 01_SITE.DGN 12-30-2013

SOUTH 1ST STREET BRIDGE OVER THE KINNICKINNIC RIVER

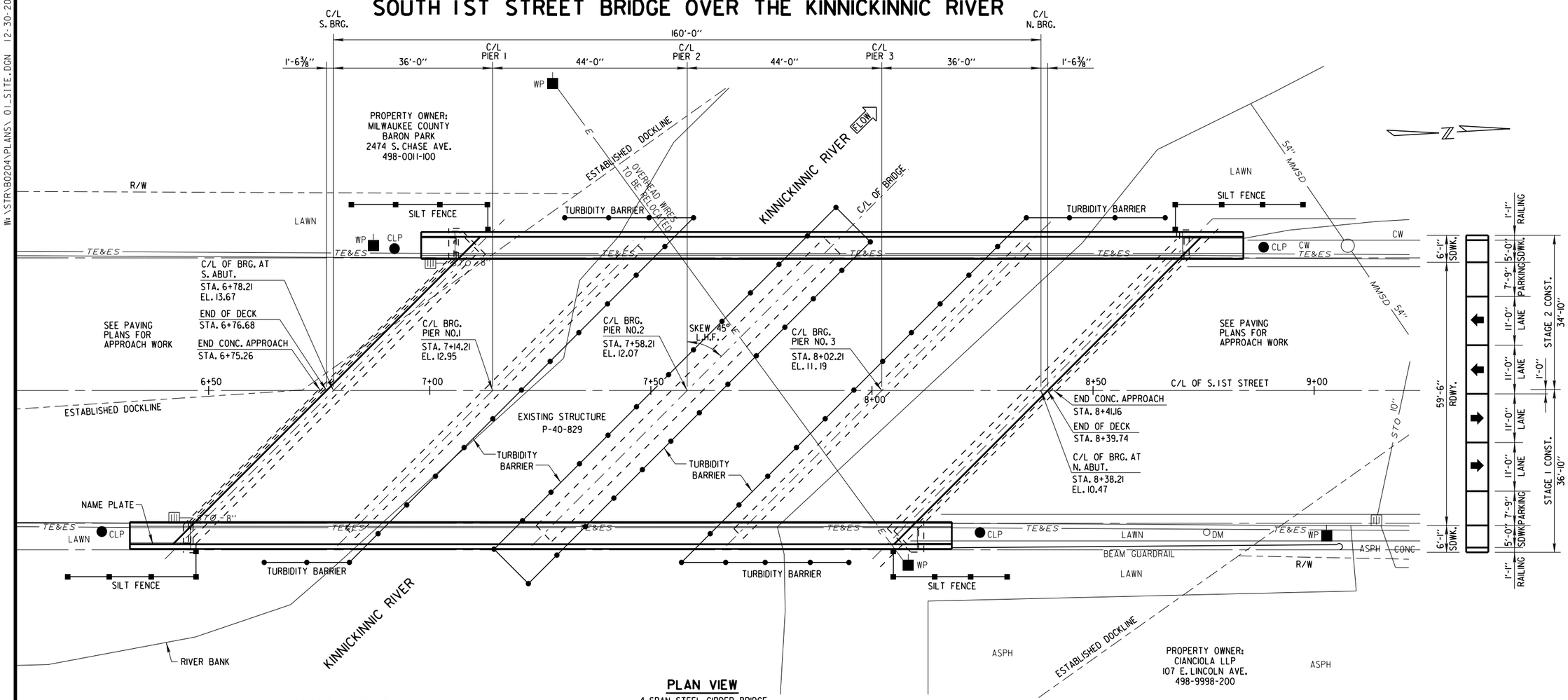

PLAN VIEW

4-SPAN STEEL GIRDER BRIDGE

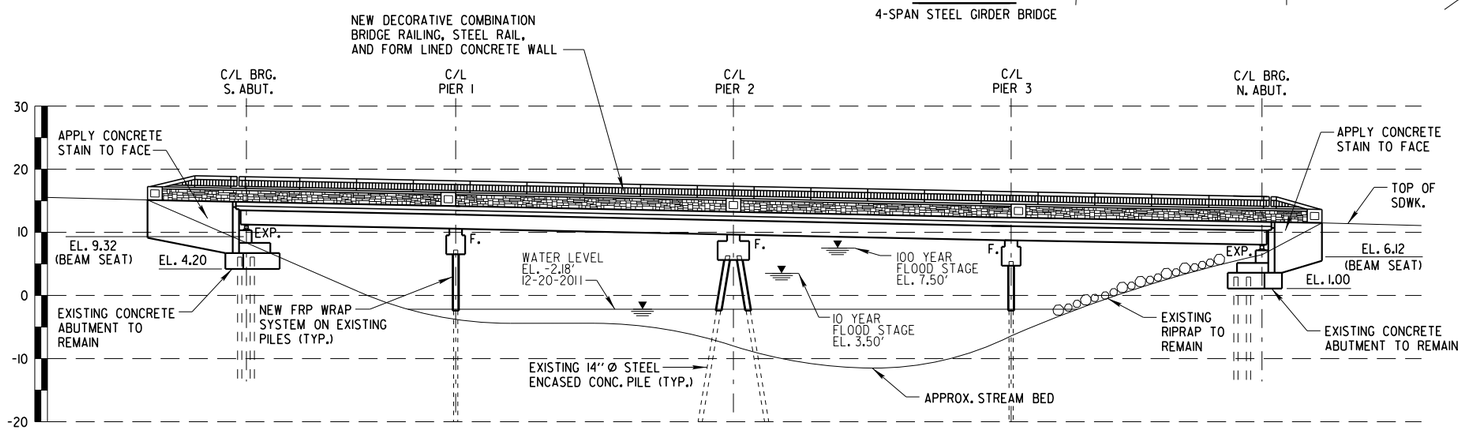

EAST ELEVATION

LOOKING WEST

BENCH MARKS

QUARTER SECTION MONUMENT AT
S. HOWELL AVE. & E. LINCOLN AVE.
STA. 10+48.88 590.35'RT.
ELEV. 5.02

HYDRANT ON NE CORNER OF
S. 1ST ST. & E. LINCOLN AVE.
STA. 10+30.8 44.1'RT.
ELEV. 8.58

NOTE:
EXISTING BRIDGE PLANS ARE AVAILABLE IN FRANK P. ZEIDLER MUNICIPAL BUILDING STRUCTURAL DESIGN SECTION ROOM 907 CONTACT GREGORY ROGALINSKI 414-286-0483

CITY OF MILWAUKEE CONTACT:
CRAIG LIBERTO 414-286-3294

WISCONSIN
CRAIG S. LIBERTO
E-23746
MILWAUKEE
WIS.
PROFESSIONAL ENGINEER

Craig S. Liberto
1/22/2014

City of Milwaukee
Department of Public Works
Infrastructure Services Division

SOUTH 1ST STREET BRIDGE OVER THE KINNICKINNIC RIVER
SITE PLAN

REVISIONS

DESIGNED BY J.D.T.	
DRAWN BY K.P.S.	
CHECKED BY J.J.K.	
DATE 01/2014	SCALE NONE
JOB NUMBER BR100-14-0104	
SHEET NUMBER 1 OF 24	
OF 36	

W:\STR\B0204\PLANS\ 02_SECTION.DGN 12-10-2013

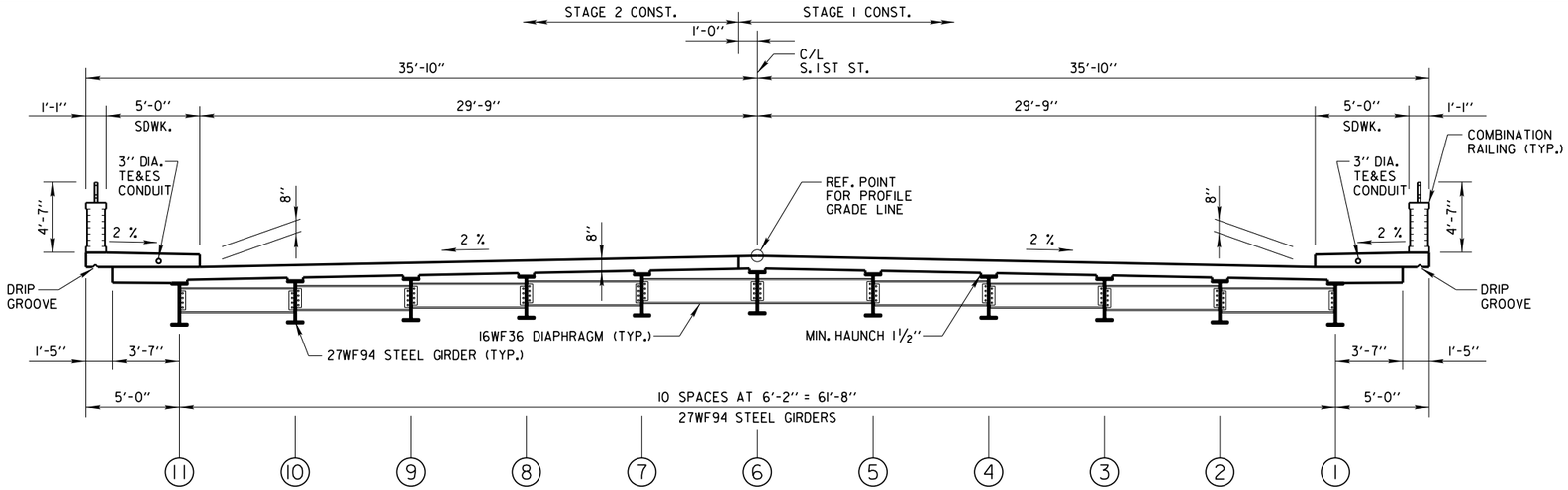

CROSS SECTION THRU C/L OF NEW BRIDGE LOOKING NORTH

ESTIMATE OF QUANTITIES

ITEM NO.	BID ITEM	UNIT	ABUTMENTS SOUTH	ABUTMENTS NORTH	PIERS	SUPER-STRUCTURE	TOTAL
201.0110	CLEARING	SY					95
201.0210	GRUBBING	SY					95
203.0600.S	REMOVING OLD STRUCTURE OVER WATERWAY WITH MINIMAL DEBRIS STATION 7+58.21	LS				1	1
206.1000	EXCAVATION FOR STRUCTURES BRIDGES (P-40-829)	LS					1
210.0100	BACKFILL STRUCTURE	CY	110	110			220
502.0100	CONCRETE MASONRY BRIDGES	CY	18	19		400	437
502.3100	EXPANSION DEVICE (P-40-829)	LS				1	1
502.3200	PROTECTIVE SURFACE TREATMENT	SY				1,285	1,285
502.5005	MASONRY ANCHORS TYPE L NO. 5 BARS	EACH	346	346			692
505.0605	BAR STEEL REINFORCEMENT HS COATED BRIDGES	LB	4,717	4,761		84,467	93,945
506.0105	STRUCTURAL STEEL CARBON	LB				4,115	4,115
506.3015	WELDED STUD SHEAR CONNECTORS ⅞× 6-INCH	EACH				1,806	1,806
506.3025	WELDED STUD SHEAR CONNECTORS ⅞× 8-INCH	EACH				516	516
506.3030	WELDED STUD SHEAR CONNECTORS ⅞× 9-INCH	EACH				516	516
506.6000	BEARING ASSEMBLIES EXPANSION (P-40-829)	EACH	11	11			22
506.7050.S	REMOVING BEARINGS, P-40-829	EACH	11	11			22
509.1500	CONCRETE SURFACE REPAIR	SF	78	38			116
509.9025.S	EPOXY INJECTION CRACK REPAIR	LF	5	5			10
516.0100	DAMPPROOFING	SY	32	32			64
516.0500	RUBBERIZED MEMBRANE WATERPROOFING	SY	20	20			40
517.0900.S	PREPARATION AND COATING OF TOP FLANGES P-40-829	LS				1	1
517.1010.S	CONCRETE STAINING P-40-829	SF	69	69		1,043	1,181
517.1015.S	CONCRETE STAINING MULTI-COLOR P-40-829	SF				1,632	1,632
517.1050.S	ARCHITECTURAL SURFACE TREATMENT P-40-829	SF				1,632	1,632
517.1800.S	STRUCTURE REPAINTING RECYCLED ABRASIVE P-40-829	LS				1	1
517.4500.S	NEGATIVE PRESSURE CONTAINMENT AND COLLECTION OF WASTE MATERIAL P-40-829	LS				1	1
517.6001.S	PORTABLE DECONTAMINATION FACILITY	EACH				1	1
628.1504	SILT FENCE	LF	80	80			160
628.1520	SILT FENCE MAINTENANCE	LF	80	80			160
628.6005	TURBIDITY BARRIERS	SY			565		565
642.5201	FIELD OFFICE TYPE C	EACH					1
650.6500	CONSTRUCTION STAKING STRUCTURE LAYOUT (P-40-829)	LS					1
652.0235	CONDUIT RIGID NONMETALLIC SCHEDULE 40 3-INCH	LF				344	344
SPV.0090	GALVANIZED PIPE 16 GAUGE 8-INCH	LF	30				30
SPV.0105	RAILING STEEL TYPE C2 GALVANIZED P-40-829	LS				1	1
SPV.0165	STEEL PILE ENCASEMENT TO EL. -2.4	SF			1,395		1,395
SPV.0165	STEEL PILE ENCASEMENT EL. -2.4 TO MUD LINE	SF			1,280		1,280

DESIGN SPECIFICATIONS

AASHTO STANDARD SPECIFICATIONS FOR HIGHWAY BRIDGES, 17TH EDITION.

CONSTRUCTION SPECIFICATIONS

WISCONSIN DEPARTMENT OF TRANSPORTAION STANDARD SPECIFICATIONS FOR HIGHWAY AND STANDARD CONSTRUCTION, 2014 EDITION, EXCEPT AS NOTED.

AWS BRIDGE WELDING CODE D1.5, LATEST EDITION.

AWS STRUCTURAL WELDING CODE-STEEL D1.1, LATEST EDITION.

DESIGN DATA

DEAD LOAD

CONCRETE = 150 PCF
FWS = 20 PSF
PARAPET = 455 LB/LF

LIVE LOAD

DESIGN RATING: HS-20
INVENTORY RATING: HS-35
OPERATING RATING: HS-58
MAXIMUM STANDARD PERMIT VEHICLE LOAD: 250 KIPS

ULTIMATE DESIGN STRESSES:

CONCRETE MASONRY (SLAB).....f'c = 4,000 PSI
CONCRETE MASONRY (OTHERS).....f'c = 3,500 PSI
BAR STEEL REINFORCEMENT.....Fy = 60,000 PSI
ROLLED STEEL BEAMS/SHAPES.....Fy = 50,000 PSI NEW
.....Fy = 33,000 PSI OLD

TRAFFIC VOLUME

ADT (2011) = 5,700
ADT (2023) = 6,600
ROADWAY DESIGN SPEED = 30 MPH

UTILITIES

EXISTING UTILITIES ARE TO BE KEPT IN SERVICE AND PROTECTED DURING THE REHABILITATION PROJECT. SEE PROJECT SPECIAL PROVISIONS.

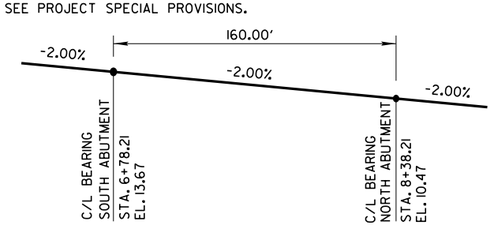

PROFILE LINE ALONG C/L OF S. 1ST ST.

GENERAL NOTES

- DRAWINGS SHALL NOT BE SCALED.
- PLACE BAR STEEL REINFORCEMENT WITH 2" OF CLEAR CONCRETE COVER UNLESS OTHERWISE NOTED.
- BEVEL EXPOSED EDGES OF CONCRETE 1" UNLESS OTHERWISE NOTED.
- STATIONS AND ELEVATIONS ARE IN FEET.
- ELEVATIONS ARE REFERENCED TO CITY OF MILWAUKEE DATUM.
- CITY OF MILWAUKEE DATUM = 580.6 NGVD.
- REINFORCING BARS ARE ENGLISH. FIRST DIGIT OF A THREE DIGIT BAR MARK OR FIRST TWO DIGITS OF A FOUR DIGIT BAR MARK SIGNIFY BAR SIZE.
- EXISTING GROUND LINE SHALL BE UPPER LIMIT OF EXCAVATION AT ABUTMENTS.
- ALL SPACES EXCAVATED AND NOT OCCUPIED BY STRUCTURE SHALL BE BACKFILLED WITH BACKFILL STRUCTURE.
- JOINT FILLER SHALL CONFORM TO AASHTO DESIGNATION M153 TYPE I, II, OR III, OR AASHTO DESIGNATION M213.
- DIMENSIONS SHOWN ARE BASED ON THE ORIGINAL STRUCTURE PLANS.
- EXISTING ABUTMENTS AND PIERS ARE TO REMAIN IN PLACE AS SHOWN AND INCORPORATED INTO NEW CONSTRUCTION.
- VARIATIONS TO EXISTING OR PROPOSED GRADE LINE OVER ¼" MUST BE SUBMITTED TO FIELD ENGINEER FOR REVIEW.
- CLEAN, STRAIGHTEN, EPOXY COAT AND INCORPORATE EXISTING BAR STEEL REINFORCEMENT INTO NEW WORK, WHERE APPLICABLE.
- CONCRETE REMOVALS SHALL BE DEFINED BY A 1" DEEP SAW CUT.
- IF AN ITEM IS LISTED OR DESCRIBED IN SPECIAL PROVISIONS AND IS NOT SPECIFICALLY SHOWN ON DRAWINGS, OR IF AN ITEM IS SHOWN ON THE DRAWINGS AND IS NOT SPECIFICALLY LISTED OR DESCRIBED IN SPECIAL PROVISIONS, THEN IT SHALL BE CONSIDERED A PART OF THE WORK AND NO ADDITIONAL COMPENSATION WILL BE ALLOWED. IF IT IS NOT OBVIOUS AS TO WHICH PAY ITEM IT BELONGS, THEN ENGINEER SHALL BE CONSULTED FOR INTERPRETATION, AND THE ENGINEERS DECISION SHALL GOVERN.
- WELDING NOT SHOWN ON THE PLANS WILL NOT BE PERMITTED, EXCEPT BY WRITTEN PERMISSION FROM THE ENGINEER AND WITH AN APPROVED WELD PROCEDURE PROVIDED BY THE CONTRACTOR.
- ALL EXISTING STEEL SHALL BE SANDBLASTED AND PAINTED UNDER BID ITEMS 517.0900.S "PREPARATION AND COATING OF TOP FLANGES P-40-829", 517.1800.S "STRUCTURE REPAINTING RECYCLED ABRASIVE (STRUCTURE P-40-829)", AND 517.4500.S "NEGATIVE PRESSURE CONTAINMENT AND COLLECTION OF WASTE MATERIALS (P-40-829)".
- PAINTING SHALL BE IN ACCORDANCE WITH SPECIAL PROVISIONS. FINISH COAT COLOR FOR STRUCTURAL STEEL SHALL BE AS SELECTED BY CITY OF MILWAUKEE.
- CONCRETE STAIN COLOR SHALL MATCH EXISTING CONCRETE COLOR PENDING ENGINEER'S APPROVAL OF 24" x 24" SAMPLE.
- EXPANSION JOINT ASSEMBLY, INCLUDING ANCHOR STUDS AND HARDWARE SHALL BE PAID FOR IN THE LUMP SUM PRICE BID AS "EXPANSION DEVICE (P-40-829)".
- THE CONTRACTOR SHALL SUPPLY A NEW NAME PLATE IN ACCORDANCE WITH SECTION 502.3.11 OF THE STANDARD SPECIFICATIONS AND THE STANDARD DETAIL DRAWINGS. NAME PLATE TO SHOW ORIGINAL CONSTRUCTION YEAR.
- BENDING DIMENSIONS FOR REINFORCING BARS ARE OUT TO OUT.

PROPOSED IMPROVEMENTS

THE PROJECT AS PROPOSED CONSISTS OF: SURFACE REPAIRS TO THE ABUTMENTS AND PIERS, REPAIR & REPLACEMENT OF BEARING ASSEMBLIES AS NEEDED, SAND BLASTING AND PAINTING STEEL GIRDERS, WELDING SHEAR STUDS TO THE TOP FLANGE OF GIRDERS, REPLACING THE CONCRETE DECK, REPLACING EXPANSION JOINTS AT THE ABUTMENTS, CONCRETE STAINING OF ABUTMENTS AND PIERS, REPLACING BRIDGE RAILING, AND ENCAPSULATING THE PILES.

HYDRAULIC DATA

INSTANTANEOUS PEAK DISCHARGE, 100 YEARS	=	10,400 CFS
VELOCITY THRU BRIDGE, 100 YEARS	=	10.5 FPS
100 YEAR FLOOD STAGE	=	588.1 NGVD29
WATERWAY AREA THRU BRIDGE	=	4,370 S.F.
DRAINAGE AREA	=	21.3 SQ. MI.
SCOUR CRITICAL CODE	=	3
10 YEAR FLOOD STAGE	=	584.1 NGVD29

City of Milwaukee

Department of Public Works

Infrastructure Services Division

SOUTH 1ST STREET BRIDGE
OVER THE KINNICKINNIC RIVER
SECTION AND PLAN QUANTITIES

REVISIONS

DESIGNED BY J.D.T.
DRAWN BY K.P.S.
CHECKED BY J.J.K.
DATE 01/2014
SCALE NONE
JOB NUMBER BR100-14-0104
SHEET NUMBER 2 OF 24
OF 36

W:\STR\B0204\PLANS\ 03_DECKSOUTH.DGN 12-10-2013

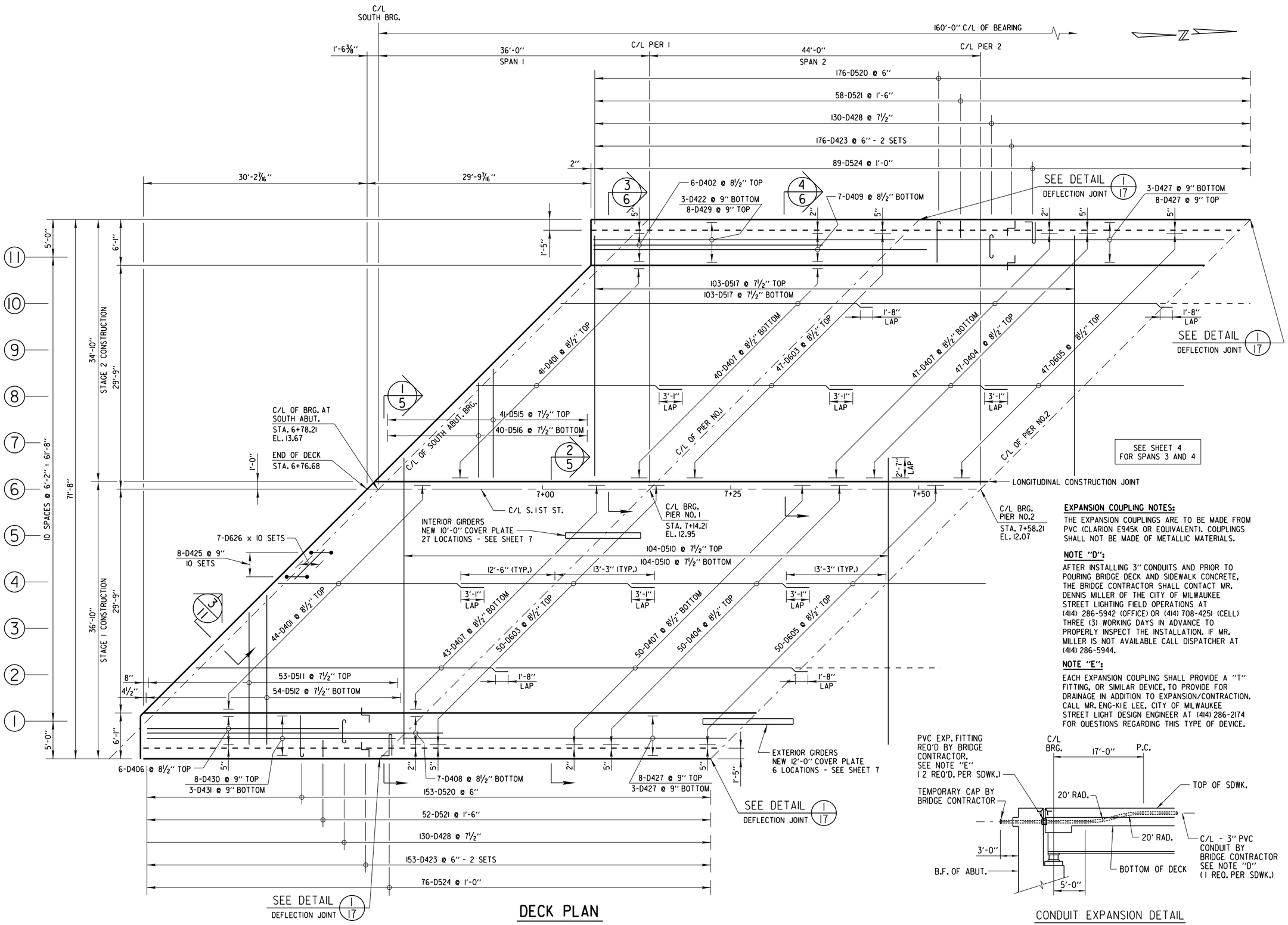

DECK PLAN

SPANS 1 AND 2

EXPANSION COUPLING NOTES:

THE EXPANSION COUPLINGS ARE TO BE MADE FROM PVC (CLARION E945K OR EQUIVALENT). COUPLINGS SHALL NOT BE MADE OF METALLIC MATERIALS.

NOTE "D":

AFTER INSTALLING 3" CONDUITS AND PRIOR TO POURING BRIDGE DECK AND SIDEWALK CONCRETE, THE BRIDGE CONTRACTOR SHALL CONTACT MR. DENNIS MILLER OF THE CITY OF MILWAUKEE STREET LIGHTING FIELD OPERATIONS AT (414) 286-5942 (OFFICE) OR (414) 708-4251 (CELL) THREE (3) WORKING DAYS IN ADVANCE TO PROPERLY INSPECT THE INSTALLATION. IF MR. MILLER IS NOT AVAILABLE CALL DISPATCHER AT (414) 286-5944.

NOTE "E":

EACH EXPANSION COUPLING SHALL PROVIDE A "T" FITTING, OR SIMILAR DEVICE, TO PROVIDE FOR DRAINAGE IN ADDITION TO EXPANSION/CONTRACTION. CALL MR. ENG-KIE LEE, CITY OF MILWAUKEE STREET LIGHT DESIGN ENGINEER AT (414) 286-2174 FOR QUESTIONS REGARDING THIS TYPE OF DEVICE.

CONDUIT EXPANSION DETAIL

(TYP. AT ALL 4 CORNERS)

City of Milwaukee

Department of Public Works

Infrastructure Services Division

SOUTH 1ST STREET BRIDGE OVER THE KINNICKINNIC RIVER DECK PLAN SPANS 1 AND 2

REVISIONS

DESIGNED BY J.D.T.	
DRAWN BY K.P.S.	
CHECKED BY J.J.K.	
DATE 01/2014	SCALE NONE
JOB NUMBER BR100-14-0104	
SHEET NUMBER 3 OF 24	
OF 36	

W:\STR\B0204\PLANS\ 04_DECKNORTH.DGN 12-30-2013

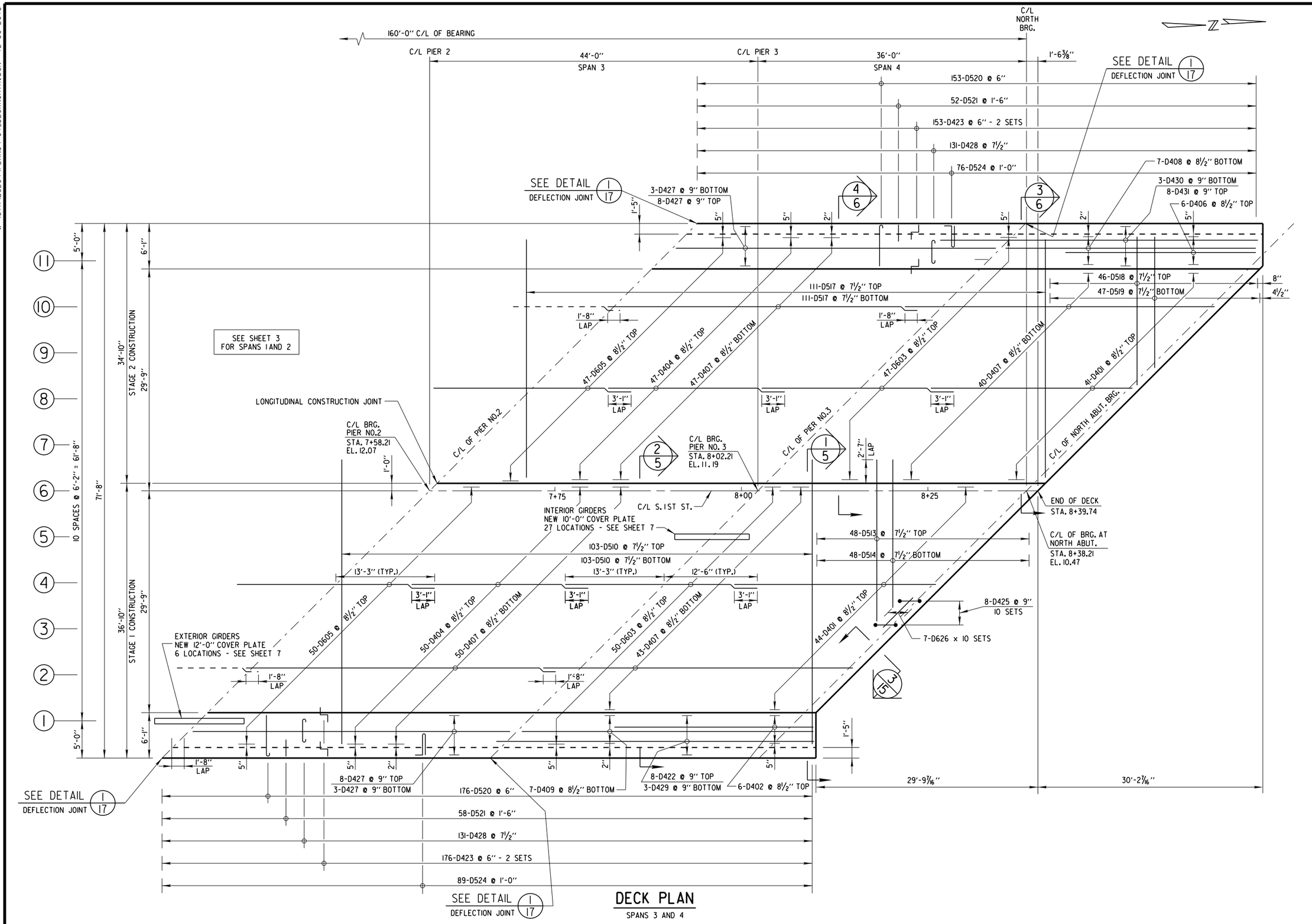

DECK PLAN

SPANS 3 AND 4

City of Milwaukee

Department of Public Works

Infrastructure Services Division

SOUTH 1ST STREET BRIDGE
OVER THE KINNICKINNIC RIVER
DECK PLAN SPANS 3 AND 4

REVISIONS

DESIGNED BY J.D.T.	
DRAWN BY K.P.S.	
CHECKED BY J.J.K.	
DATE 01/2014	SCALE NONE
JOB NUMBER BR100-14-0104	
SHEET NUMBER 4 OF 24	
OF 36	

W:\STR\B0204\PLANS\ 05_SECTION1.DGN 12-13-2013

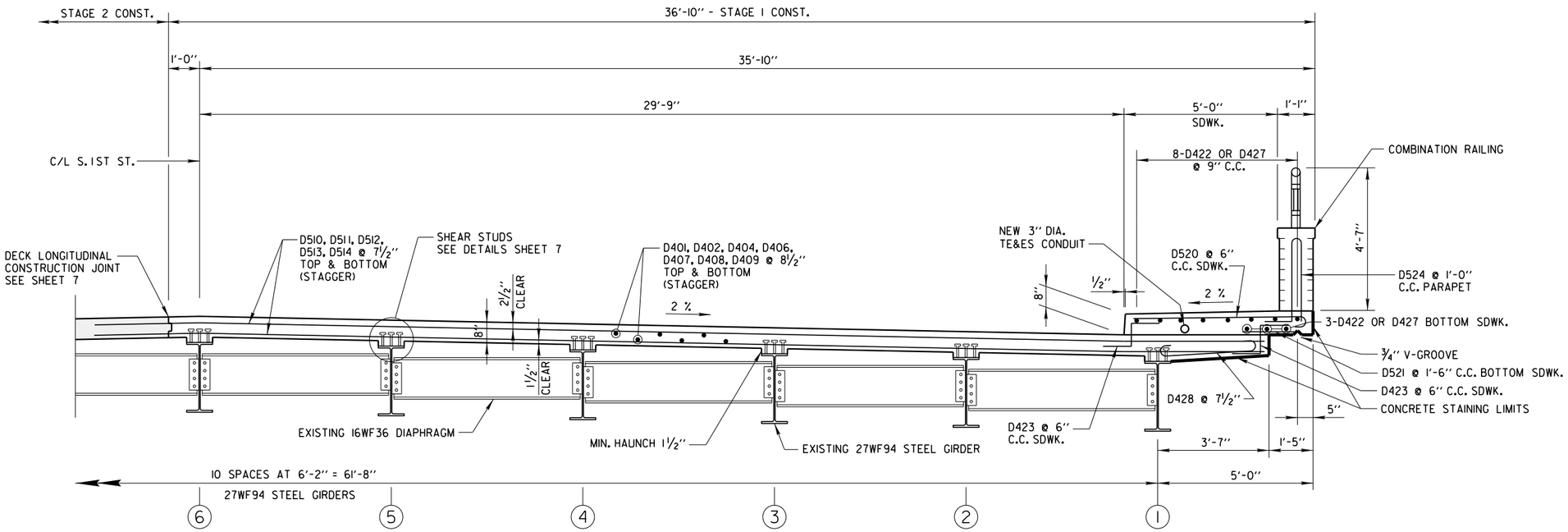

1/3 1/4 CROSS SECTION OF STAGE 1 - ALL SPANS

LOOKING NORTH NEAR MIDSPAN

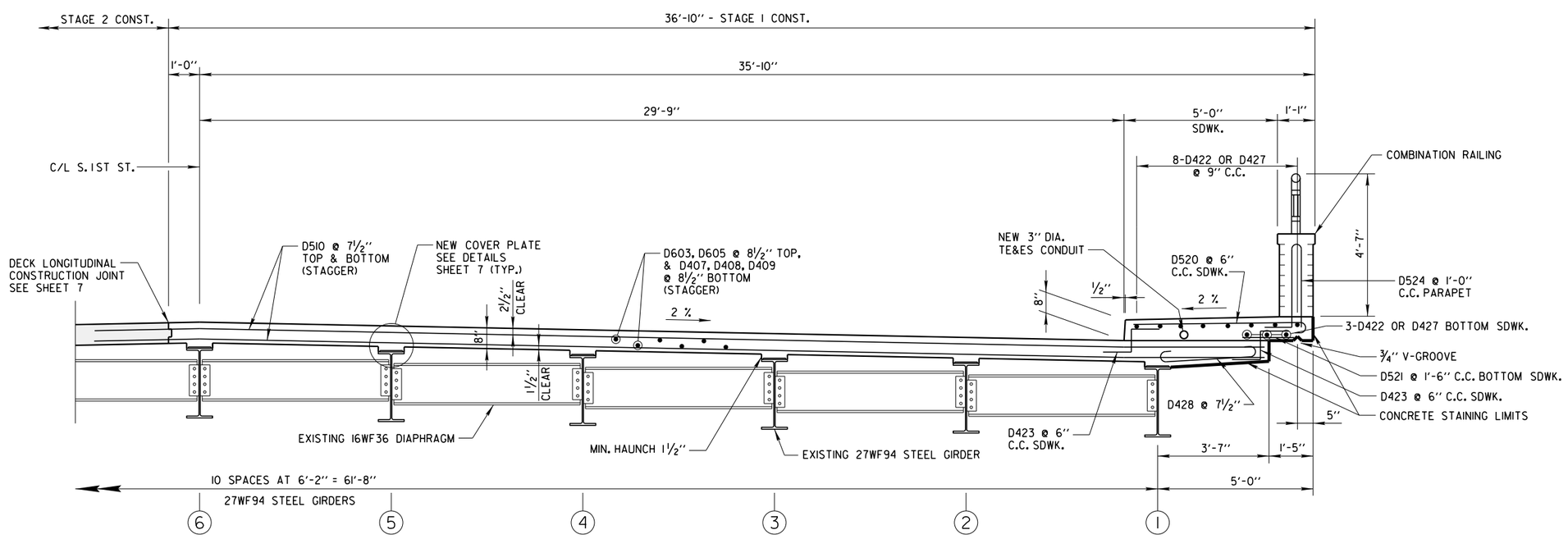

2/3 2/4 CROSS SECTION OF STAGE 1 - ALL SPANS

LOOKING NORTH NEAR PIERS

City of Milwaukee

Department of Public Works

Infrastructure Services Division

SOUTH 1ST STREET BRIDGE OVER THE KINNICKINNIC RIVER STAGE 1 CONSTRUCTION CROSS SECTION

REVISIONS

DESIGNED BY J.D.T.	
DRAWN BY K.P.S.	
CHECKED BY J.J.K.	
DATE 01/2014	SCALE NONE
JOB NUMBER BR100-14-0104	
SHEET NUMBER 5 OF 24	
OF 36	

W:\STR\B0204\PLANS\ 06_SECTION2.DGN 12-30-2013

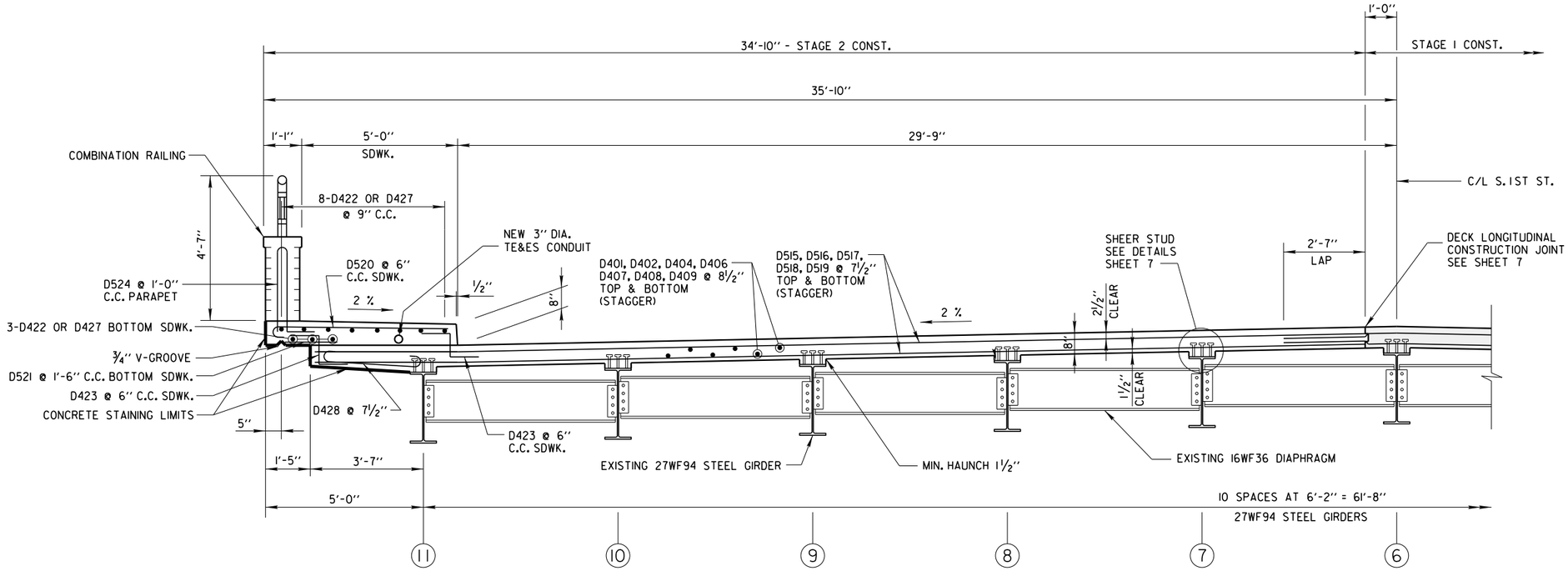

3/3 3/4 **CROSS SECTION STAGE 2 - ALL SPANS**

LOOKING NORTH NEAR MIDSPAN

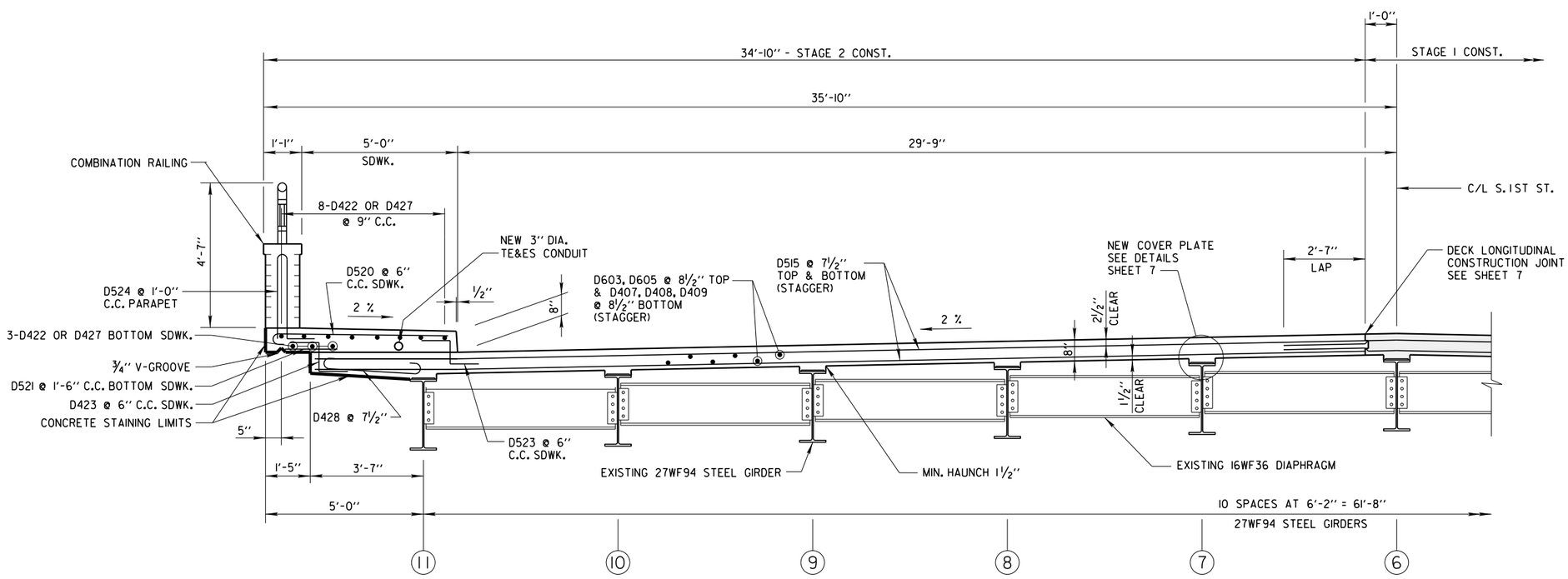

4/3 4/4 **CROSS SECTION STAGE 2 - ALL SPANS**

LOOKING NORTH NEAR PIER

City of Milwaukee

Department of Public Works

Infrastructure Services Division

SOUTH 1ST STREET BRIDGE
OVER THE KINNICKINNIC RIVER
STAGE 2 CONSTRUCTION CROSS SECTION

REVISIONS

DESIGNED BY J.D.T.	
DRAWN BY K.P.S.	
CHECKED BY J.J.K.	
DATE 01/2014	SCALE NONE
JOB NUMBER BR100-14-0104	
SHEET NUMBER 6 OF 24	
OF 36	

W:\STR\B0204\PLANS\ 07_DECKBAR.DGN 12-30-2013

BILL OF BARS - DECK STAGE 1

BAR MARK	COAT	NO. REQ'D.	LENGTH	BENT	BAR SERIES	LOCATION
D401	×	88	28'-0"			DECK - TOP LONGIT.
D402	×	6	30'-6"		◭	DECK - TOP LONGIT.
D603	×	100	25'-9"			DECK - TOP LONGIT. OVER PIERS 1 & 3
D404	×	100	23'-8"			DECK - TOP LONGIT.
D605	×	50	26'-6"			DECK - TOP LONGIT. OVER PIER 2
D406	×	6	25'-6"		◭	DECK - TOP LONGIT.
D407	×	186	41'-11"			DECK - BOTTOM LONGIT.
D408	×	7	39'-7"		◭	DECK - BOTTOM LONGIT.
D409	×	7	44'-5"		◭	DECK - BOTTOM LONGIT.
D510	×	414	37'-10"			DECK - TOP & BOTTOM TRANSVERSE
D511	×	53	20'-11"		◭	DECK - TOP TRANSVERSE
D512	×	54	20'-11"		◭	DECK - BOTTOM TRANSVERSE
D513	×	48	18'-1"		◭	DECK - TOP TRANSVERSE
D514	×	48	17'-8"		◭	DECK - BOTTOM TRANSVERSE
D520	×	329	6'-4"	×		SDWK. - TOP TRANSVERSE
D521	×	110	2'-3"			SDWK. - BOTTOM TRANSVERSE
D422	×	8	40'-2"		◭	SDWK. - TOP LONGIT. SPANS 1 AND 4
D423	×	658	2'-10"	×		SDWK. - STIRRUPS
D524	×	165	6'-11"	×		PARAPET - STIRRUPS
D425	×	80	4'-10"	×		END DIAPHRAGM
D626	×	70	5'-4"			END DIAPHRAGM
D427	×	22	43'-8"			SDWK. - TOP & BOTTOM LONGIT. SPANS 2 AND 3
D428	×	261	4'-5"	×		DECK - BOTTOM TRANSVERSE - CANTILEVER
D429	×	3	42'-0"		◭	SDWK. - BOTTOM LONGIT. SPANS 1 AND 4
D430	×	8	34'-6"		◭	SDWK. - TOP LONGIT. SPANS 1 AND 4
D431	×	3	32'-7"		◭	SDWK. - BOTTOM LONGIT. SPANS 1 AND 4

BILL OF BARS - DECK STAGE 2

BAR MARK	COAT	NO. REQ'D.	LENGTH	BENT	BAR SERIES	LOCATION
D401	×	82	28'-0"			DECK - TOP LONGIT.
D402	×	6	30'-6"		◭	DECK - TOP LONGIT.
D603	×	94	25'-9"			DECK - TOP LONGIT. OVER PIERS 1 & 3
D404	×	94	23'-8"			DECK - TOP LONGIT.
D605	×	47	26'-6"			DECK - TOP LONGIT. OVER PIER 2
D406	×	6	25'-6"		◭	DECK - TOP LONGIT.
D407	×	174	41'-11"			DECK - BOTTOM LONGIT.
D408	×	7	39'-7"		◭	DECK - BOTTOM LONGIT.
D409	×	7	44'-5"		◭	DECK - BOTTOM LONGIT.
D515	×	41	15'-8"		◭	DECK - TOP TRANSVERSE
D516	×	40	15'-8"		◭	DECK - BOTTOM TRANSVERSE
D517	×	428	33'-3"			DECK - TOP & BOTTOM TRANSVERSE
D518	×	46	18'-9"		◭	DECK - TOP TRANSVERSE
D519	×	47	18'-9"		◭	DECK - BOTTOM TRANSVERSE
D520	×	329	6'-4"	×		SDWK. - TOP TRANSVERSE
D521	×	110	2'-3"			SDWK. - BOTTOM TRANSVERSE
D422	×	8	40'-2"		◭	SDWK. - TOP LONGIT. SPANS 1 AND 4
D423	×	658	2'-10"	×		SDWK. - STIRRUPS
D524	×	165	6'-11"	×		PARAPET - STIRRUPS
D425	×	80	4'-10"	×		END DIAPHRAGM
D626	×	70	5'-4"			END DIAPHRAGM
D427	×	22	43'-8"			SDWK. - TOP & BOTTOM LONGIT. SPANS 2 AND 3
D428	×	261	4'-5"	×		DECK - BOTTOM TRANSVERSE - CANTILEVER
D429	×	3	42'-0"		◭	SDWK. - BOTTOM LONGIT. SPANS 1 AND 4
D430	×	8	34'-6"		◭	SDWK. - TOP LONGIT. SPANS 1 AND 4
D431	×	3	32'-7"		◭	SDWK. - BOTTOM LONGIT. SPANS 1 AND 4

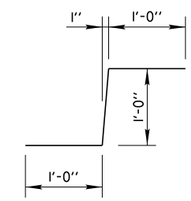

D423

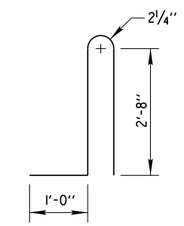

D524

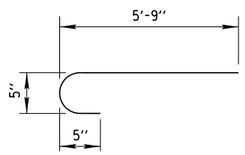

D520

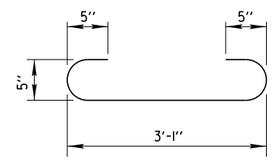

D428

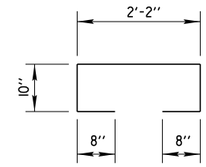

D425

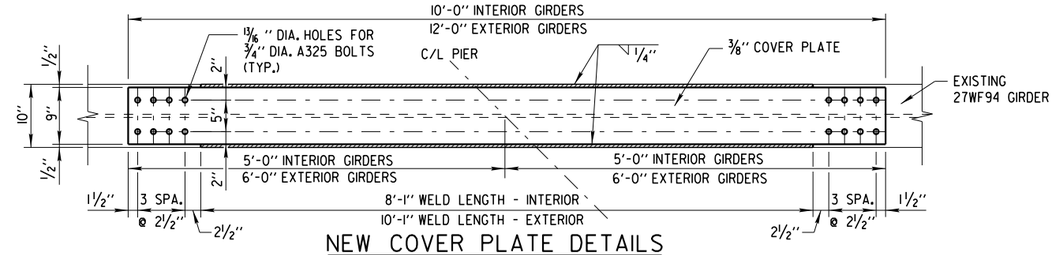

NEW COVER PLATE DETAILS

PLAN VIEW

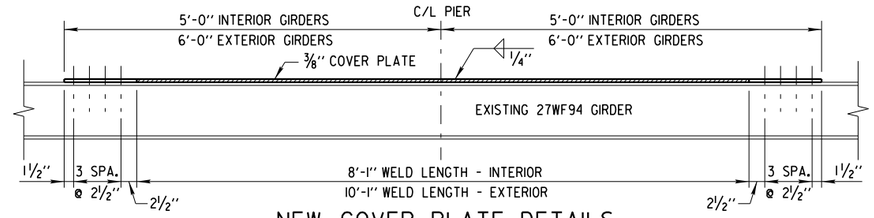

NEW COVER PLATE DETAILS

ELEVATION VIEW

27 - 10'-0" x ⅜" x 9" FOR INTERIOR GIRDERS AT PIERS 1, 2 & 3
6 - 12'-0" x ⅜" x 9" FOR EXTERIOR GIRDERS AT PIERS 1, 2 & 3

BAR SERIES TABLE

BAR MARK	NO. REQUIRED	LENGTH
D402	2 SERIES OF 6	28'-9" TO 32'-3"
D406	2 SERIES OF 6	23'-8" TO 27'-3"
D408	2 SERIES OF 7	37'-5" TO 41'-8"
D409	2 SERIES OF 7	42'-3" TO 46'-6"
D511	1 SERIES OF 53	4'-8" TO 37'-2"
D512	1 SERIES OF 54	4'-4" TO 37'-6"
D513	1 SERIES OF 48	3'-4" TO 32'-9"
D514	1 SERIES OF 48	3'-0" TO 32'-4"
D515	1 SERIES OF 41	3'-2" TO 28'-2"
D516	1 SERIES OF 40	3'-6" TO 27'-10"
D518	1 SERIES OF 46	4'-8" TO 32'-9"
D519	1 SERIES OF 47	4'-4" TO 33'-1"
D422	1 SERIES OF 8	37'-6" TO 42'-9"
D429	1 SERIES OF 3	41'-3" TO 42'-9"
D430	1 SERIES OF 8	31'-10" TO 37'-1"
D431	1 SERIES OF 3	31'-10" TO 33'-4"

BUNDLE AND TAG EACH SERIES SEPARATELY

◭ LENGTH SHOWN FOR BARS IS AN AVERAGE LENGTH AND SHOULD ONLY BE USED FOR BAR WEIGHT CALCULATIONS. SEE BAR SERIES TABLE FOR ACTUAL LENGTH.

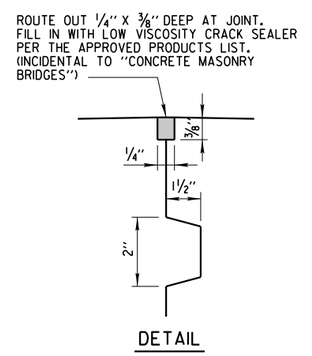

DETAIL

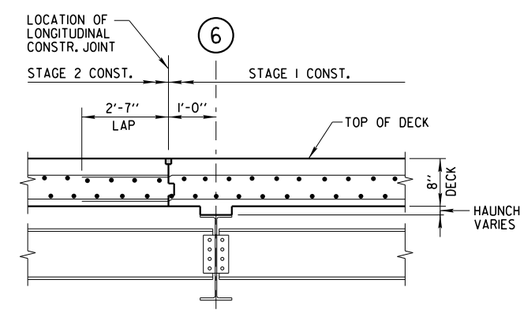

(VIEW LOOKING NORTH)

DECK LONGITUDINAL CONSTRUCTION JOINT

PLACED ALONG LONGITUDINAL CONSTRUCTION JOINT OF BRIDGE DECK

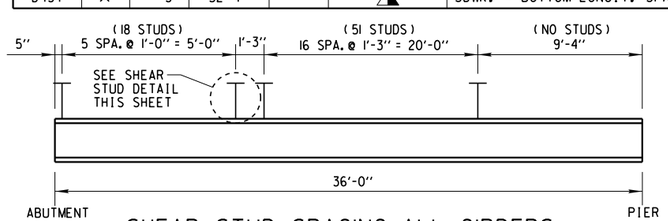

SHEAR STUD SPACING-ALL GIRDERS

(END SPANS 1 AND 4)

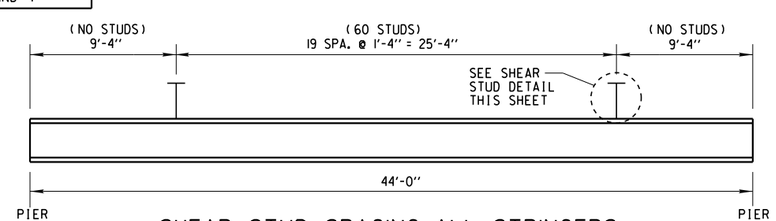

SHEAR STUD SPACING-ALL STRINGERS

(CENTER SPANS 2 AND 3)

NOTE:

AFTER REMOVAL OF DECK, AND BEFORE ORDERING THE SHEAR STUDS, CONTRACTOR SHALL SHOOT GRADES OF THE TOP OF THE GIRDERS TO DETERMINE HAUNCH HEIGHTS. ORDER APPROPRIATE SIZE STUDS AS NEEDED TO ACHIEVE MINIMUM 2" EMBEDMENT INTO BOTTOM OF NEW DECK SLAB.

⅞" DIA. x 9" LONG SHEAR STUD AT GIRDERS 1 AND 11.
⅞" DIA. x 8" LONG SHEAR STUD AT GIRDERS 2 AND 10.
⅞" DIA. x 6" LONG SHEAR STUD AT GIRDERS 3 TO 9.
MINIMUM 2-INCH EMBEDMENT INTO BOTTOM OF CONCRETE DECK.

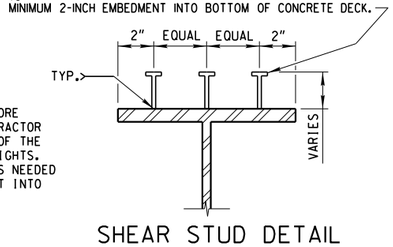

SHEAR STUD DETAIL

City of Milwaukee

Department of Public Works

Infrastructure Services Division

SOUTH 1ST STREET BRIDGE
OVER THE KINNICKINNIC RIVER
DECK BILL OF BARS AND DETAILS

REVISIONS

DESIGNED BY J.D.T.	
DRAWN BY K.P.S.	
CHECKED BY J.J.K.	
DATE 01/2014	SCALE NONE
JOB NUMBER BR100-14-0104	
SHEET NUMBER 7 OF 24	
OF 36	

W:\STR\B0204\PLANS\ 08_GRADES.DGN 12-11-2013

TOP OF DECK ELEVATIONS SPAN 1

SPAN LENGTH "L"	GIRDER NO.	DESC.	C/L BEARING S. ABUT.	0.10L SPAN	0.20L SPAN	0.30L SPAN	0.40L SPAN	0.50L SPAN	0.60L SPAN	0.70L SPAN	0.80L SPAN	0.90L SPAN	C/L BEARING PIER 1
	TYPICAL INTERIOR AND EXTERIOR DEAD LOAD DEFLECTION (IN.)		0.00	0.01	0.01	0.01	0.01	0.01	0.01	0.01	0.00	0.00	0.00
36'-0"	WEST EDGE	T. DECK	12.29	12.22	12.15	12.08	12.01	11.96	11.86	11.79	11.72	11.65	11.57
		HAUNCH	N/A	N/A	N/A	N/A	N/A	N/A	N/A	N/A	N/A	N/A	N/A
	11	T. DECK	12.44	12.36	12.29	12.22	12.15	12.08	12.00	11.93	11.86	11.79	11.72
		HAUNCH	0.50	0.50	0.51	0.51	0.51	0.51	0.51	0.51	0.51	0.50	0.50
	10	T. DECK	12.68	12.61	12.54	12.47	12.40	12.32	12.25	12.18	12.11	12.04	11.96
		HAUNCH	0.38	0.38	0.39	0.39	0.39	0.39	0.39	0.39	0.38	0.38	0.38
	9	T. DECK	12.93	12.86	12.79	12.71	12.64	12.57	12.50	12.43	12.35	12.28	12.21
		HAUNCH	0.25	0.26	0.26	0.27	0.27	0.27	0.26	0.26	0.26	0.26	0.26
	8	T. DECK	13.18	13.10	13.03	12.96	12.89	12.82	12.74	12.67	12.60	12.53	12.46
		HAUNCH	0.20	0.20	0.21	0.21	0.21	0.21	0.21	0.21	0.21	0.20	0.20
	7	T. DECK	13.42	13.35	13.28	13.21	13.14	13.06	12.99	12.92	12.85	12.78	12.70
		HAUNCH	0.22	0.22	0.23	0.23	0.23	0.23	0.23	0.23	0.22	0.22	0.22
	CONST. JOINT	T. DECK	13.63	13.56	13.49	13.41	13.34	13.27	13.20	13.13	13.05	12.98	12.91
		HAUNCH	N/A	N/A	N/A	N/A	N/A	N/A	N/A	N/A	N/A	N/A	N/A
	6	T. DECK	13.67	13.60	13.53	13.45	13.38	13.31	13.24	13.17	13.09	13.02	12.95
		HAUNCH	0.30	0.31	0.31	0.32	0.32	0.32	0.31	0.31	0.31	0.31	0.31
	5	T. DECK	13.67	13.60	13.53	13.45	13.38	13.31	13.24	13.17	13.09	13.02	12.95
		HAUNCH	0.21	0.22	0.22	0.23	0.23	0.23	0.22	0.22	0.22	0.22	0.22
	4	T. DECK	13.67	13.60	13.53	13.45	13.38	13.31	13.24	13.17	13.09	13.02	12.95
		HAUNCH	0.19	0.20	0.20	0.21	0.21	0.21	0.20	0.20	0.20	0.20	0.20
	3	T. DECK	13.67	13.60	13.53	13.45	13.38	13.31	13.24	13.17	13.09	13.02	12.95
		HAUNCH	0.25	0.26	0.26	0.27	0.27	0.27	0.26	0.26	0.26	0.26	0.26
	2	T. DECK	13.67	13.60	13.53	13.45	13.38	13.31	13.24	13.17	13.09	13.02	12.95
		HAUNCH	0.37	0.38	0.38	0.39	0.39	0.39	0.38	0.38	0.38	0.38	0.38
	1	T. DECK	13.67	13.60	13.53	13.45	13.38	13.31	13.24	13.17	13.09	13.02	12.95
		HAUNCH	0.53	0.54	0.54	0.55	0.55	0.55	0.54	0.54	0.54	0.54	0.54
	EAST EDGE	T. DECK	13.67	13.60	13.53	13.45	13.38	13.31	13.24	13.17	13.09	13.02	12.95
		HAUNCH	N/A	N/A	N/A	N/A	N/A	N/A	N/A	N/A	N/A	N/A	N/A

TOP OF DECK ELEVATIONS SPAN 2

SPAN LENGTH "L"	GIRDER NO.	DESC.	C/L BEARING PIER 1	0.10L SPAN	0.20L SPAN	0.30L SPAN	0.40L SPAN	0.50L SPAN	0.60L SPAN	0.70L SPAN	0.80L SPAN	0.90L SPAN	C/L BEARING PIER 2
	TYPICAL INTERIOR AND EXTERIOR DEAD LOAD DEFLECTION (IN.)		0.00	0.00	0.01	0.01	0.01	0.01	0.01	0.01	0.01	0.00	0.00
44'-0"	WEST EDGE	T. DECK	11.57	11.49	11.40	11.31	11.22	11.13	11.05	10.96	10.87	10.65	10.69
		HAUNCH	N/A	N/A	N/A	N/A	N/A	N/A	N/A	N/A	N/A	N/A	N/A
	11	T. DECK	11.72	11.63	11.54	11.45	11.36	11.28	11.19	11.10	11.01	10.92	10.84
		HAUNCH	0.50	0.50	0.51	0.51	0.51	0.51	0.51	0.51	0.51	0.50	0.50
	10	T. DECK	11.96	11.88	11.79	11.70	11.61	11.52	11.44	11.35	11.26	11.17	11.08
		HAUNCH	0.38	0.38	0.38	0.39	0.39	0.39	0.39	0.39	0.38	0.38	0.38
	9	T. DECK	12.21	12.12	12.03	11.95	11.86	11.77	11.68	11.59	11.51	11.42	11.33
		HAUNCH	0.26	0.26	0.26	0.26	0.27	0.27	0.27	0.26	0.26	0.26	0.26
	8	T. DECK	12.46	12.37	12.28	12.19	12.10	12.02	11.93	11.84	11.75	11.66	11.58
		HAUNCH	0.20	0.20	0.21	0.21	0.21	0.21	0.21	0.21	0.21	0.20	0.20
	7	T. DECK	12.70	12.62	12.53	12.44	12.35	12.26	12.18	12.09	12.00	11.91	11.82
		HAUNCH	0.22	0.22	0.22	0.23	0.23	0.23	0.23	0.23	0.22	0.22	0.22
	CONST. JOINT	T. DECK	12.91	12.86	12.73	12.65	12.56	12.47	12.38	12.29	12.21	12.12	12.03
		HAUNCH	N/A	N/A	N/A	N/A	N/A	N/A	N/A	N/A	N/A	N/A	N/A
	6	T. DECK	12.95	12.86	12.77	12.69	12.60	12.51	12.42	12.33	12.25	12.16	12.07
		HAUNCH	0.31	0.31	0.31	0.31	0.32	0.32	0.32	0.31	0.31	0.31	0.31
	5	T. DECK	12.95	12.86	12.77	12.69	12.60	12.51	12.42	12.33	12.25	12.16	12.07
		HAUNCH	0.22	0.22	0.22	0.22	0.23	0.23	0.23	0.22	0.22	0.22	0.22
	4	T. DECK	12.95	12.86	12.77	12.69	12.60	12.51	12.42	12.33	12.25	12.16	12.07
		HAUNCH	0.20	0.20	0.20	0.20	0.21	0.21	0.21	0.20	0.20	0.20	0.20
	3	T. DECK	12.95	12.86	12.77	12.69	12.60	12.51	12.42	12.33	12.25	12.16	12.07
		HAUNCH	0.26	0.26	0.26	0.26	0.27	0.27	0.27	0.26	0.26	0.26	0.26
	2	T. DECK	12.95	12.86	12.77	12.69	12.60	12.51	12.42	12.33	12.25	12.16	12.07
		HAUNCH	0.38	0.38	0.38	0.38	0.39	0.39	0.39	0.38	0.38	0.38	0.38
	1	T. DECK	12.95	12.86	12.77	12.69	12.60	12.51	12.42	12.33	12.25	12.16	12.07
		HAUNCH	0.54	0.54	0.54	0.54	0.55	0.55	0.55	0.54	0.54	0.54	0.54
	EAST EDGE	T. DECK	12.95	12.86	12.77	12.69	12.60	12.51	12.42	12.33	12.25	12.16	12.07
		HAUNCH	N/A	N/A	N/A	N/A	N/A	N/A	N/A	N/A	N/A	N/A	N/A

NOTE:
HAUNCH HEIGHT SHOWN IS AN ESTIMATE ONLY AND BASED ON PRELIMINARY FIELD MEASUREMENTS OF TOP OF BEAM ELEVATIONS. FINAL HAUNCH HEIGHTS WILL BE DETERMINED AFTER SHOOTING GRADES OF TOP OF BEAMS AFTER REMOVAL OF DECK.

City of Milwaukee
Department of Public Works
Infrastructure Services Division

SOUTH 1ST STREET BRIDGE
OVER THE KINNICKINNIC RIVER
DECK GRADES

REVISIONS

DESIGNED BY J.D.T.
DRAWN BY K.P.S.
CHECKED BY J.J.K.
DATE 01/2014
SCALE NONE
JOB NUMBER BR100-14-0104
SHEET NUMBER 8 OF 24
OF 36

W:\STR\B0204\PLANS\ 09_GRADES.DGN 12-11-2013

TOP OF DECK ELEVATIONS SPAN 3

SPAN LENGTH "L"	GIRDER NO.	DESC.	C/L BEARING PIER 2	0.10L SPAN	0.20L SPAN	0.30L SPAN	0.40L SPAN	0.50L SPAN	0.60L SPAN	0.70L SPAN	0.80L SPAN	0.90L SPAN	C/L BEARING PIER 3
	TYPICAL INTERIOR AND EXTERIOR DEAD LOAD DEFLECTION (IN.)		0.00	0.00	0.01	0.01	0.01	0.01	0.01	0.01	0.01	0.00	0.00
44'-0"	WEST EDGE	T. DECK	10.69	10.61	10.52	10.43	10.34	10.25	10.17	10.08	9.99	9.90	9.81
		HAUNCH	N/A	N/A	N/A	N/A	N/A	N/A	N/A	N/A	N/A	N/A	N/A
	11	T. DECK	10.84	10.75	10.66	10.57	10.48	10.40	10.31	10.22	10.13	10.04	9.96
		HAUNCH	0.50	0.50	0.51	0.51	0.51	0.51	0.51	0.51	0.51	0.50	0.50
	10	T. DECK	11.08	11.00	10.91	10.82	10.73	10.64	10.56	10.47	10.38	10.29	10.20
		HAUNCH	0.38	0.38	0.38	0.39	0.39	0.39	0.39	0.39	0.38	0.38	0.38
	9	T. DECK	11.33	11.24	11.15	11.07	10.98	10.89	10.80	10.71	10.63	10.54	10.45
		HAUNCH	0.26	0.26	0.26	0.26	0.27	0.27	0.27	0.26	0.26	0.26	0.26
	8	T. DECK	11.58	11.49	11.40	11.31	11.22	11.14	11.05	10.96	10.87	10.78	10.70
		HAUNCH	0.20	0.20	0.21	0.21	0.21	0.21	0.21	0.21	0.21	0.20	0.20
	7	T. DECK	11.82	11.74	11.65	11.56	11.47	11.38	11.30	11.21	11.12	11.03	10.94
		HAUNCH	0.22	0.22	0.22	0.23	0.23	0.23	0.23	0.23	0.22	0.22	0.22
	CONST. JOINT	T. DECK	12.03	11.94	11.85	11.77	11.68	11.59	11.50	11.41	11.33	11.24	11.15
		HAUNCH	N/A	N/A	N/A	N/A	N/A	N/A	N/A	N/A	N/A	N/A	N/A
	6	T. DECK	12.07	11.98	11.89	11.81	11.72	11.63	11.54	11.45	11.37	11.28	11.19
		HAUNCH	0.31	0.31	0.31	0.31	0.32	0.32	0.32	0.31	0.31	0.31	0.31
	5	T. DECK	12.07	11.98	11.89	11.81	11.72	11.63	11.54	11.45	11.37	11.28	11.19
		HAUNCH	0.22	0.22	0.22	0.22	0.23	0.23	0.23	0.22	0.22	0.22	0.22
	4	T. DECK	12.07	11.98	11.89	11.81	11.72	11.63	11.54	11.45	11.37	11.28	11.19
		HAUNCH	0.20	0.20	0.20	0.20	0.21	0.21	0.21	0.20	0.20	0.20	0.20
	3	T. DECK	12.07	11.98	11.89	11.81	11.72	11.63	11.54	11.45	11.37	11.28	11.19
		HAUNCH	0.26	0.26	0.26	0.26	0.27	0.27	0.27	0.26	0.26	0.26	0.26
	2	T. DECK	12.07	11.98	11.89	11.81	11.72	11.63	11.54	11.45	11.37	11.28	11.19
		HAUNCH	0.38	0.38	0.38	0.38	0.39	0.39	0.39	0.38	0.38	0.38	0.38
	1	T. DECK	12.07	11.98	11.89	11.81	11.72	11.63	11.54	11.45	11.37	11.28	11.19
		HAUNCH	0.54	0.54	0.54	0.54	0.55	0.55	0.55	0.54	0.54	0.54	0.54
	EAST EDGE	T. DECK	12.07	11.98	11.89	11.81	11.72	11.63	11.54	11.45	11.37	11.28	11.19
		HAUNCH	N/A	N/A	N/A	N/A	N/A	N/A	N/A	N/A	N/A	N/A	N/A

TOP OF DECK ELEVATIONS SPAN 4

SPAN LENGTH "L"	GIRDER NO.	DESC.	C/L BEARING PIER 3	0.10L SPAN	0.20L SPAN	0.30L SPAN	0.40L SPAN	0.50L SPAN	0.60L SPAN	0.70L SPAN	0.80L SPAN	0.90L SPAN	C/L BEARING N. ABUT
	TYPICAL INTERIOR AND EXTERIOR DEAD LOAD DEFLECTION (IN.)		0.00	0.00	0.00	0.01	0.01	0.01	0.01	0.01	0.01	0.00	0.00
36'-0"	WEST EDGE	T. DECK	9.81	9.74	9.67	9.60	9.53	9.45	9.38	9.31	9.24	9.17	9.09
		HAUNCH	N/A	N/A	N/A	N/A	N/A	N/A	N/A	N/A	N/A	N/A	N/A
	11	T. DECK	9.96	9.88	9.81	9.74	9.67	9.60	9.52	9.45	9.38	9.31	9.24
		HAUNCH	0.50	0.50	0.51	0.51	0.51	0.51	0.51	0.51	0.51	0.50	0.50
	10	T. DECK	10.20	10.13	10.06	9.99	9.92	9.84	9.77	9.70	9.63	9.56	9.48
		HAUNCH	0.38	0.38	0.38	0.39	0.39	0.39	0.39	0.39	0.39	0.38	0.38
	9	T. DECK	10.45	10.38	10.31	10.23	10.16	10.09	10.02	9.95	9.87	9.80	9.73
		HAUNCH	0.26	0.26	0.26	0.26	0.26	0.27	0.27	0.27	0.26	0.26	0.25
	8	T. DECK	10.70	10.62	10.55	10.48	10.41	10.34	10.26	10.19	10.12	10.05	9.98
		HAUNCH	0.20	0.20	0.21	0.21	0.21	0.21	0.21	0.21	0.21	0.20	0.20
	7	T. DECK	10.94	10.87	10.80	10.73	10.66	10.58	10.51	10.44	10.37	10.30	10.22
		HAUNCH	0.22	0.22	0.22	0.23	0.23	0.23	0.23	0.23	0.23	0.22	0.22
	CONST. JOINT	T. DECK	11.15	11.08	11.01	10.93	10.86	10.79	10.72	10.65	10.57	10.50	10.43
		HAUNCH	N/A	N/A	N/A	N/A	N/A	N/A	N/A	N/A	N/A	N/A	N/A
	6	T. DECK	11.19	11.12	11.05	10.97	10.90	10.83	10.76	10.69	10.61	10.54	10.47
		HAUNCH	0.31	0.31	0.31	0.31	0.31	0.32	0.32	0.32	0.31	0.31	0.30
	5	T. DECK	11.19	11.12	11.05	10.97	10.90	10.83	10.76	10.69	10.61	10.54	10.47
		HAUNCH	0.22	0.22	0.22	0.22	0.22	0.23	0.23	0.23	0.22	0.22	0.21
	4	T. DECK	11.19	11.12	11.05	10.97	10.90	10.83	10.76	10.69	10.61	10.54	10.47
		HAUNCH	0.20	0.20	0.20	0.20	0.20	0.21	0.21	0.21	0.20	0.20	0.19
	3	T. DECK	11.19	11.12	11.05	10.97	10.90	10.83	10.76	10.69	10.61	10.54	10.47
		HAUNCH	0.26	0.26	0.26	0.26	0.26	0.27	0.27	0.27	0.26	0.26	0.25
	2	T. DECK	11.19	11.12	11.05	10.97	10.90	10.83	10.76	10.69	10.61	10.54	10.47
		HAUNCH	0.38	0.38	0.38	0.38	0.38	0.39	0.39	0.39	0.38	0.38	0.37
	1	T. DECK	11.19	11.12	11.05	10.97	10.90	10.83	10.76	10.69	10.61	10.54	10.47
		HAUNCH	0.54	0.54	0.54	0.54	0.54	0.55	0.55	0.55	0.54	0.54	0.53
	EAST EDGE	T. DECK	11.19	11.12	11.05	10.97	10.90	10.83	10.76	10.69	10.61	10.54	10.47
		HAUNCH	N/A	N/A	N/A	N/A	N/A	N/A	N/A	N/A	N/A	N/A	N/A

NOTE:
HAUNCH HEIGHT SHOWN IS AN ESTIMATE ONLY AND BASED ON PRELIMINARY FIELD MEASUREMENTS OF TOP OF BEAM ELEVATIONS. FINAL HAUNCH HEIGHTS WILL BE DETERMINED AFTER SHOOTING GRADES OF TOP OF BEAMS AFTER REMOVAL OF DECK.

City of Milwaukee
Department of Public Works
Infrastructure Services Division

SOUTH 1ST STREET BRIDGE
OVER THE KINNICKINNIC RIVER
DECK GRADES

REVISIONS

DESIGNED BY J.D.T.
DRAWN BY K.P.S.
CHECKED BY J.J.K.
DATE 01/2014
SCALE NONE
JOB NUMBER BR100-14-0104
SHEET NUMBER 9 OF 24
OF 36

W:\STR\B0204\PLANS\ 10_ABUTSOUTH.DGN 12-30-2013

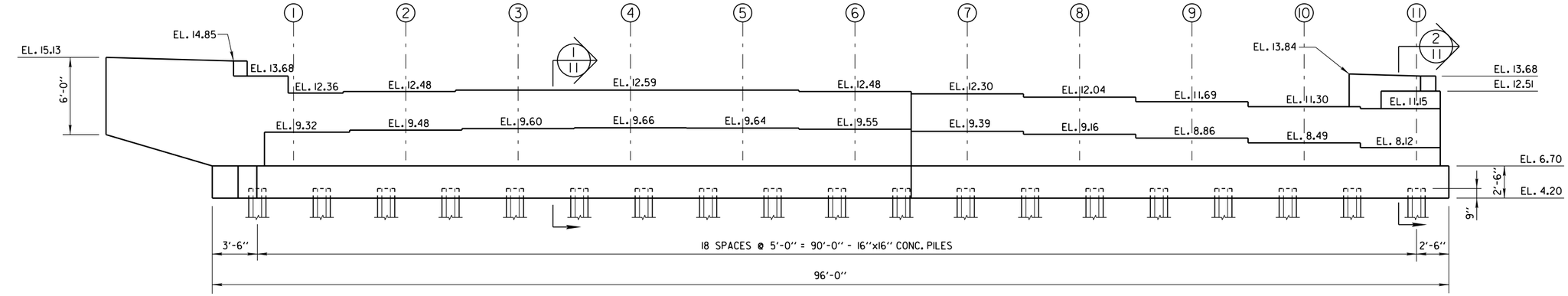

EXISTING SOUTH ABUTMENT - ELEVATION VIEW

LOOKING SOUTH

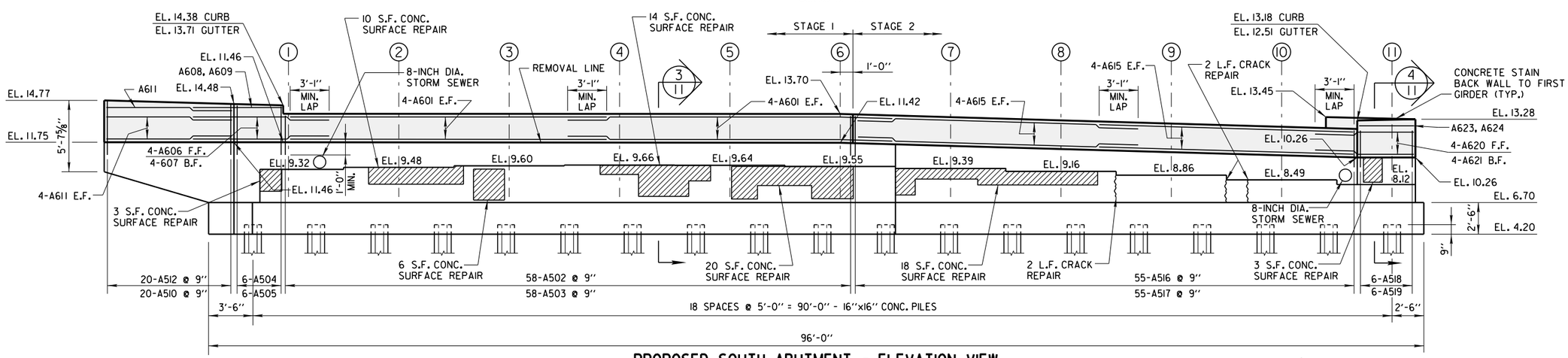

PROPOSED SOUTH ABUTMENT - ELEVATION VIEW

LOOKING SOUTH
(NEW CONCRETE BLOCKS NOT SHOWN FOR CLARITY)

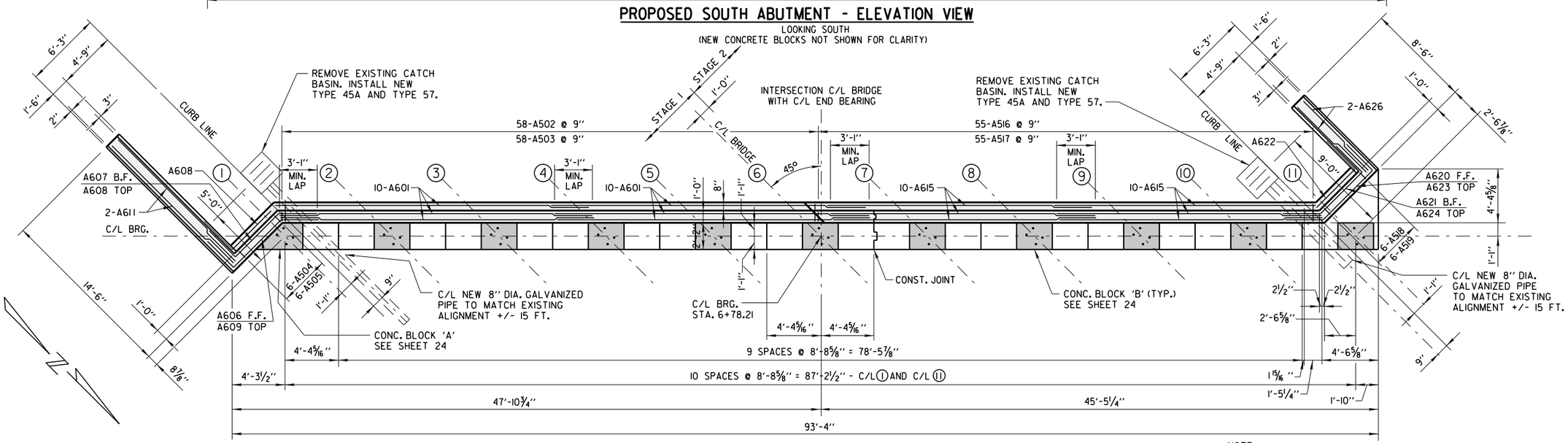

PROPOSED SOUTH ABUTMENT - PLAN VIEW

(FOOTING NOT SHOWN FOR CLARITY)

NOTE:
SEAL ALL HORIZ. & VERT. JOINTS ON BACK FACE WITH 18-INCH RUBBERIZED MEMBRANE WATERPROOFING.

City of Milwaukee

Department of Public Works

Infrastructure Services Division

SOUTH 1ST STREET BRIDGE OVER THE KINNICKINNIC RIVER
SOUTH ABUTMENT ELEVATION AND PLAN VIEW

REVISIONS

DESIGNED BY J.D.T.	
DRAWN BY K.P.S.	
CHECKED BY J.J.K.	
DATE 01/2014	SCALE NONE
JOB NUMBER BR100-14-0104	
SHEET NUMBER 10 OF 24	
OF 36	

W:\STR\B0204\PLANS\ 11_ABUTSOUTHDET.DGN 01-02-2014

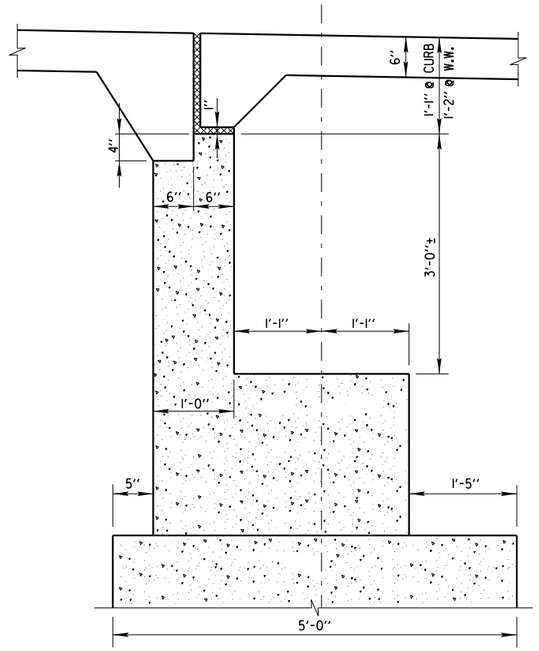

2/10 SECTION EXISTING ABUTMENT AT SIDEWALK

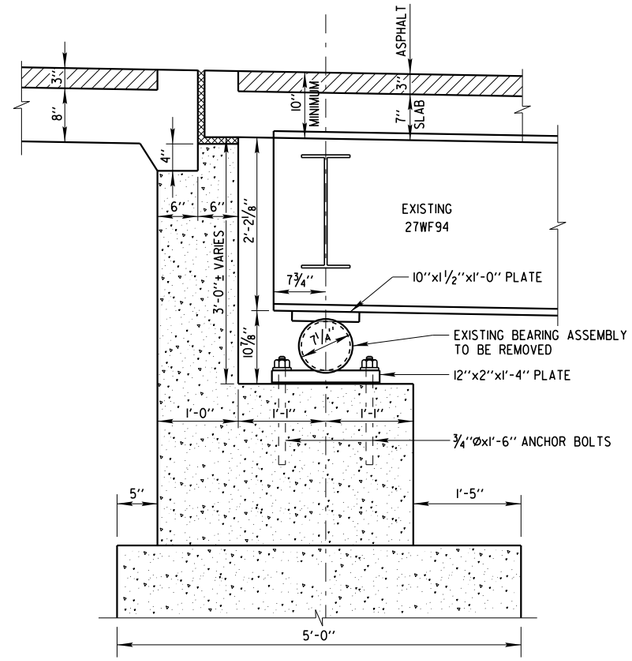

1/10 SECTION EXISTING ABUTMENT AT ROADWAY

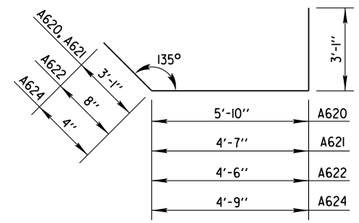

A620, A621, A622, A624

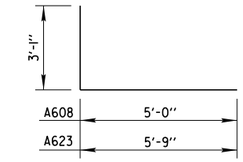

A608, A623

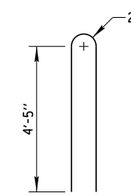

A513, A528

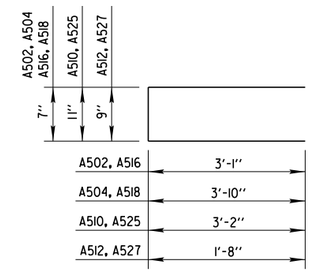

A502, A504, A510, A512, A516, A518, A525, A527

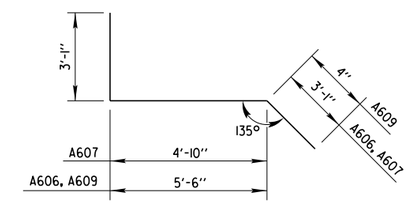

A606, A607, A609

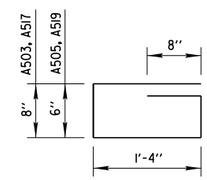

A503, A505, A517, A519

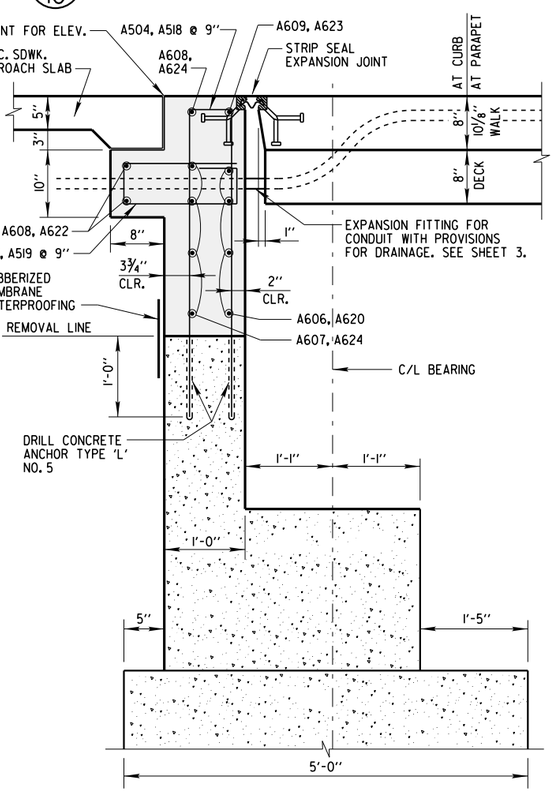

4/10 SECTION PROPOSED ABUTMENT AT SIDEWALK

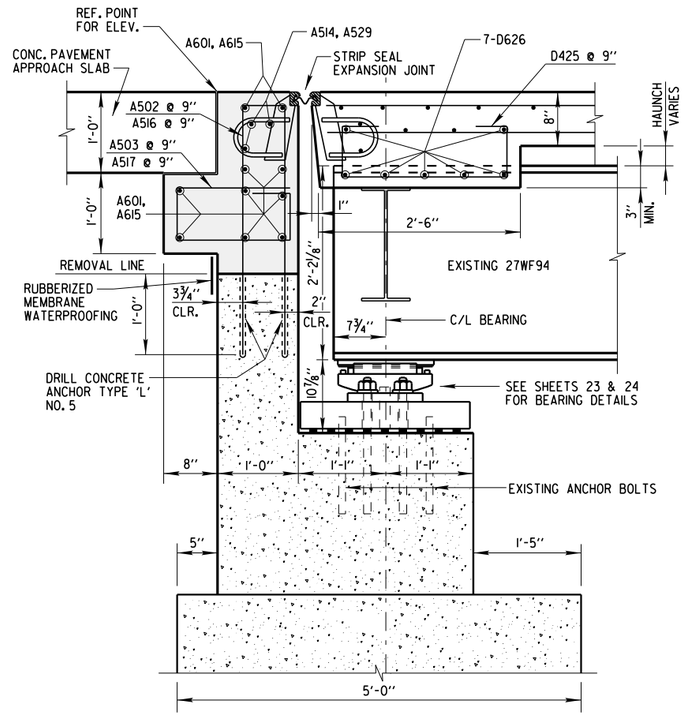

3/3 3/10 SECTION PROPOSED ABUTMENT AT ROADWAY

BILL OF BARS - SOUTH ABUTMENT

BAR MARK	COATED	NO. REQ'D.	LENGTH	BENT	BAR SERIES	LOCATION
A601	×	20	25'-2"			STAGE 1 - BACK WALL - HORIZ.
A502	×	58	6'-6"	×		STAGE 1 - BACK WALL DOWEL - ROADWAY
A503	×	58	4'-2"	×		STAGE 1 - ROADWAY CORBEL
A504	×	6	8'-0"	×		STAGE 1 - BACK WALL DOWEL - SDWK.
A505	×	6	3'-10"	×		STAGE 1 - CORBEL - SDWK.
A606	×	4	11'-6"	×		STAGE 1 - BACK WALL - HORIZ. SDWK. F.F.
A607	×	4	10'-10"	×		STAGE 1 - BACK WALL - HORIZ. SDWK. B.F.
A608	×	3	7'-11"	×		STAGE 1 - SDWK. CORBEL HORIZ.
A609	×	1	8'-9"	×		STAGE 1 - BACK WALL - HORIZ. SDWK. TOP F.F.
A510	×	20	7'-0"	×		STAGE 1 - SE WING WALL DOWEL
A611	×	10	14'-2"			STAGE 1 - WING WALL - HORIZ.
A512	×	20	3'-10"	×		STAGE 1 - WING WALL - CAP DOWEL
A513	×	19	9'-7"	×		STAGE 1 - WING WALL - RAILING DOWEL
A514	×	18	8'-0"			STAGE 1 - BACK WALL - STRIP SEAL ANCHOR
A615	×	20	21'-11"			STAGE 2 - BACK WALL - HORIZ.
A516	×	55	6'-6"	×		STAGE 2 - BACK WALL DOWEL - ROADWAY
A517	×	55	4'-2"	×		STAGE 2 - ROADWAY - CORBEL
A518	×	6	8'-0"	×		STAGE 2 - BACK WALL DOWEL - SDWK.
A519	×	6	3'-10"	×		STAGE 2 - SDWK. - CORBEL
A620	×	4	11'-10"	×		STAGE 2 - BACK WALL - HORIZ. SDWK. F.F.
A621	×	4	10'-7"	×		STAGE 2 - BACK WALL - HORIZ. SDWK. B.F.
A622	×	2	8'-1"	×		STAGE 2 - SDWK. CORBEL HORIZ.
A623	×	1	8'-8"	×		STAGE 2 - BACK WALL - HORIZ. SDWK. TOP F.F.
A624	×	1	8'-0"	×		STAGE 2 - BACK WALL - HORIZ. SDWK. TOP B.F.
A525	×	12	7'-0"	×		STAGE 2 - S.W. WING WALL DOWEL
A626	×	10	8'-2"			STAGE 2 - WING WALL - HORIZ.
A527	×	12	3'-10"	×		STAGE 2 - WING WALL - CAP DOWEL
A528	×	13	9'-7"	×		STAGE 2 - WING WALL - RAILING DOWEL
A529	×	15	8'-0"			STAGE 2 - BACK WALL - STRIP SEAL ANCHOR

City of Milwaukee

Department of Public Works

Infrastructure Services Division

SOUTH 1ST STREET BRIDGE
OVER THE KINNICKINNIC RIVER
SOUTH ABUTMENT SECTION AND BILL OF BARS

REVISIONS

DESIGNED BY J.D.T.
DRAWN BY K.P.S.
CHECKED BY J.J.K.
DATE 01/2014
SCALE NONE
JOB NUMBER BR100-14-0104
SHEET NUMBER 11 OF 24
OF 36

W:\STR\B0204\PLANS\ 12_WINGWALLSOUTH.DGN 01-02-2014

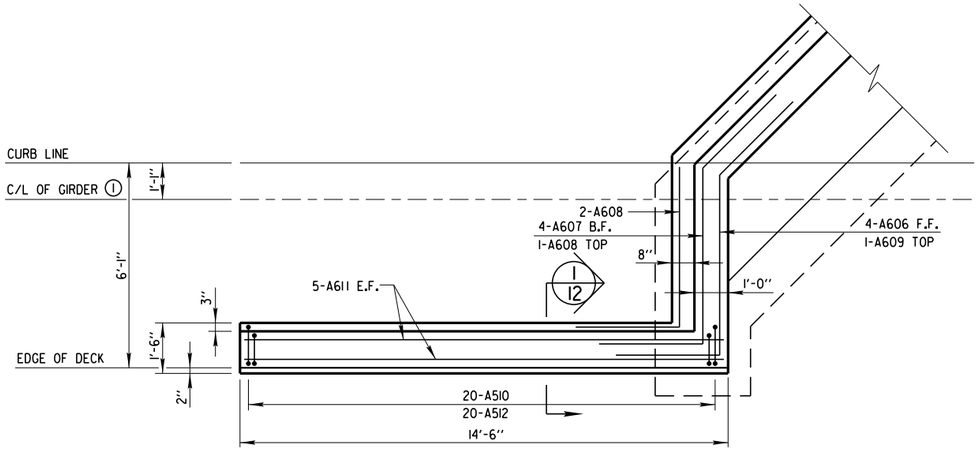

PLAN OF SOUTHEAST WING WALL

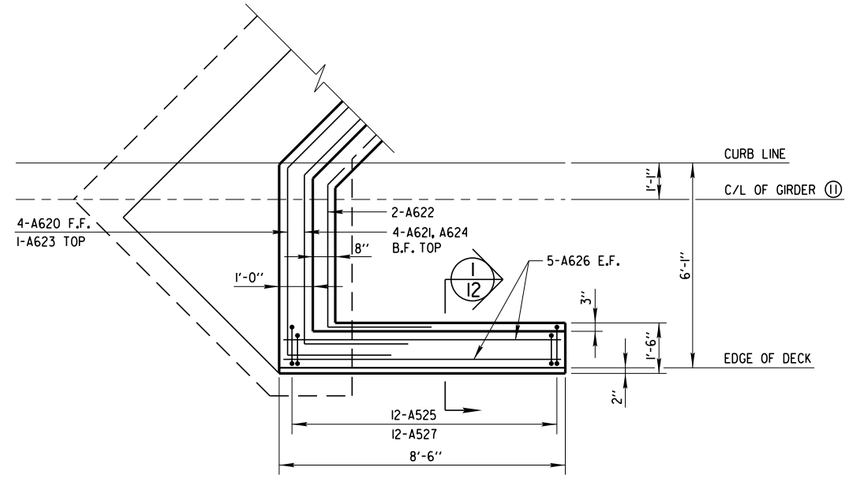

PLAN OF SOUTHWEST WING WALL

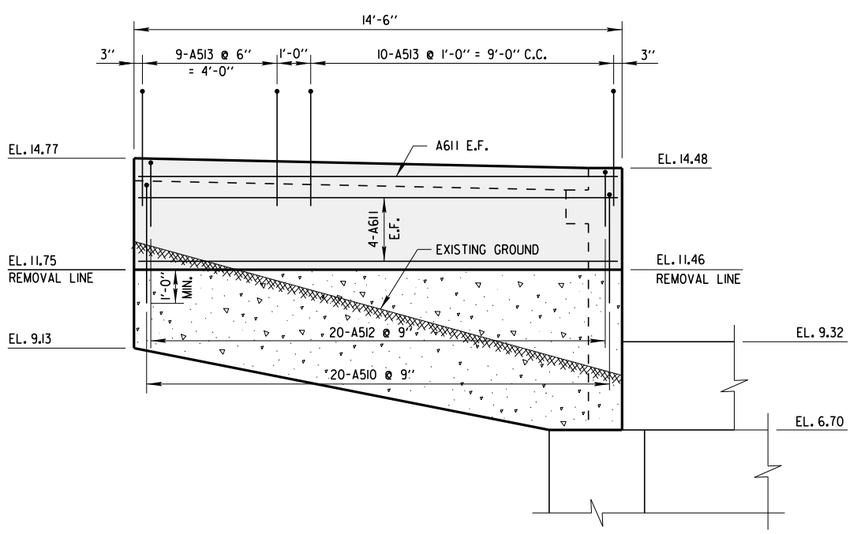

ELEVATION OF SOUTHEAST WING WALL

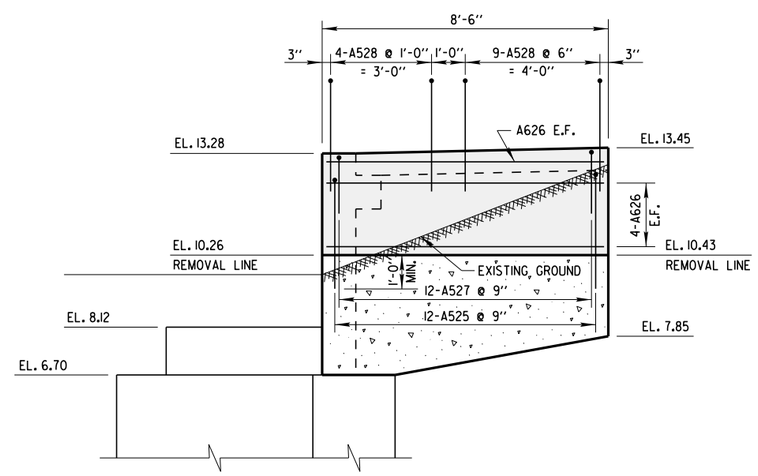

ELEVATION OF SOUTHWEST WING WALL

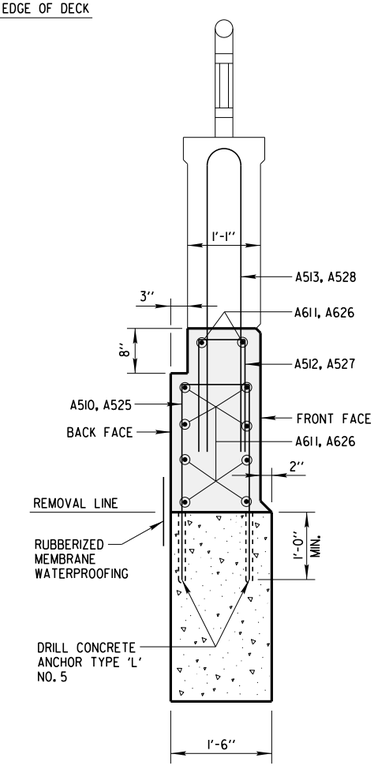

TYPICAL SECTION THRU WING WALL

(I / 12)

NOTE:

CONCRETE STAINING TO BE APPLIED FROM TOP OF WING WALL TO EXISTING GROUND LINE.

City of Milwaukee

Department of Public Works

Infrastructure Services Division

SOUTH 1ST STREET BRIDGE
OVER THE KINNICKINNIC RIVER
SOUTH ABUTMENT WING WALL DETAILS

REVISIONS

DESIGNED BY J.D.T.	
DRAWN BY K.P.S.	
CHECKED BY J.J.K.	
DATE 01/2014	SCALE NONE
JOB NUMBER BR100-14-0104	
SHEET NUMBER 12 OF 24	
OF 36	

W:\STR\B0204\PLANS\ 13_PIER.DGN 01-17-2014

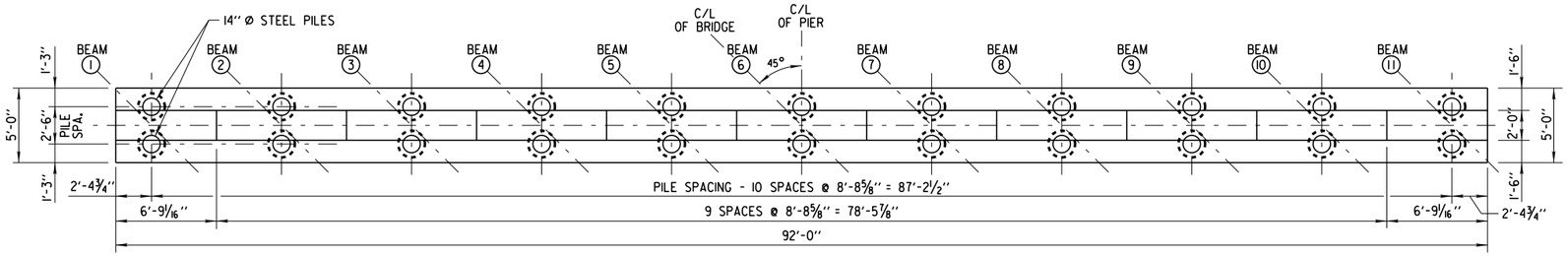

PIER NO. 2 PLAN

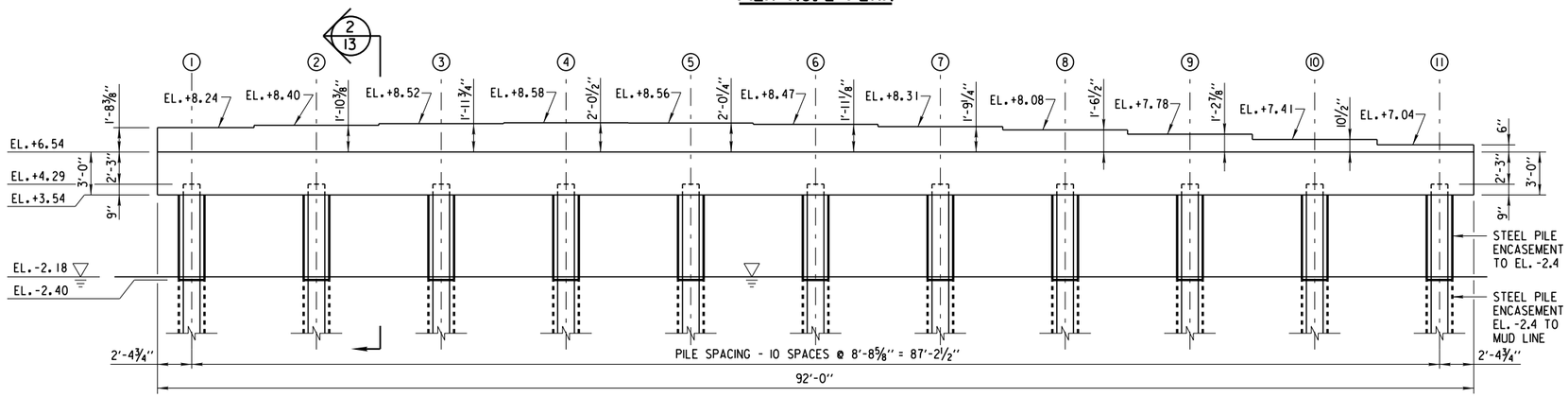

ELEVATION PIER NO. 2

LOOKING SOUTHWEST

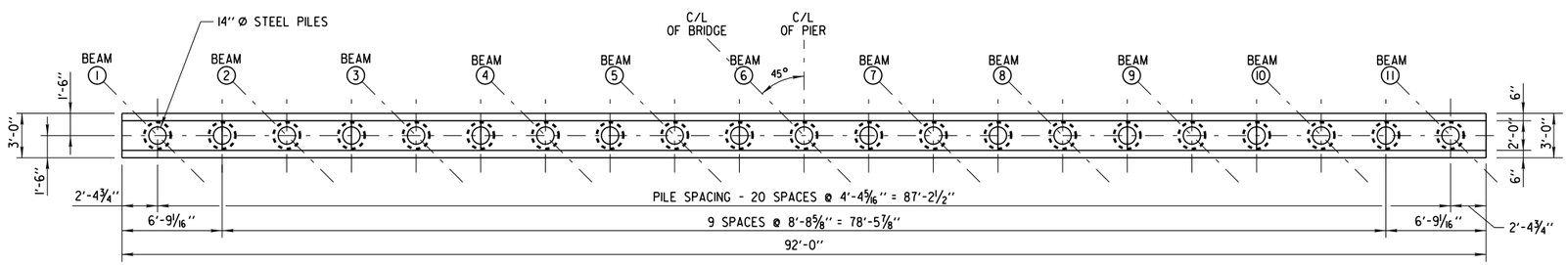

PIERS NO. 1 AND NO. 3 PLAN

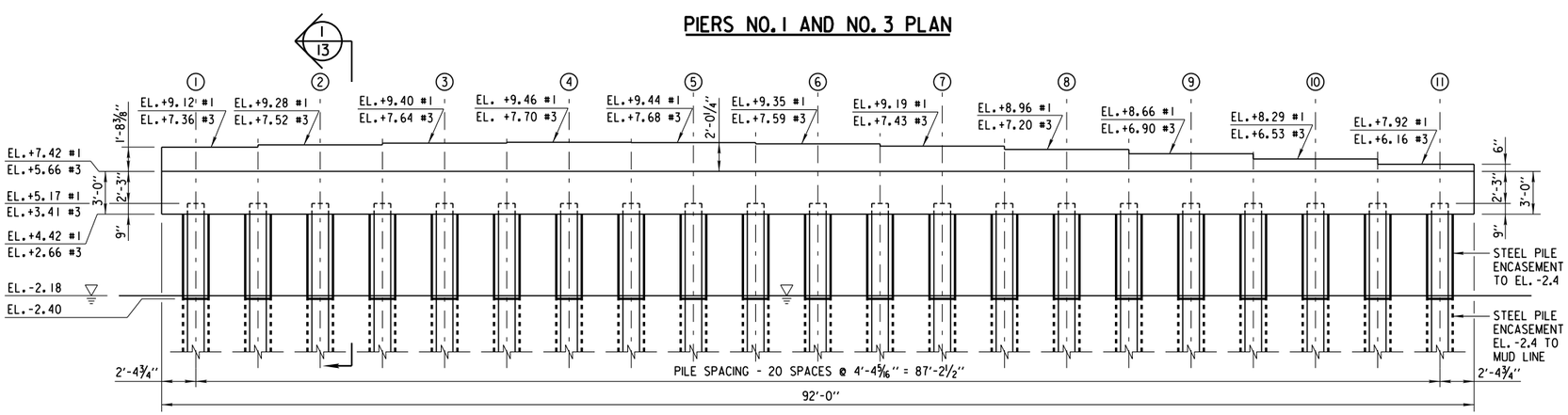

ELEVATION PIERS NO. 1 AND NO. 3

LOOKING SOUTHWEST

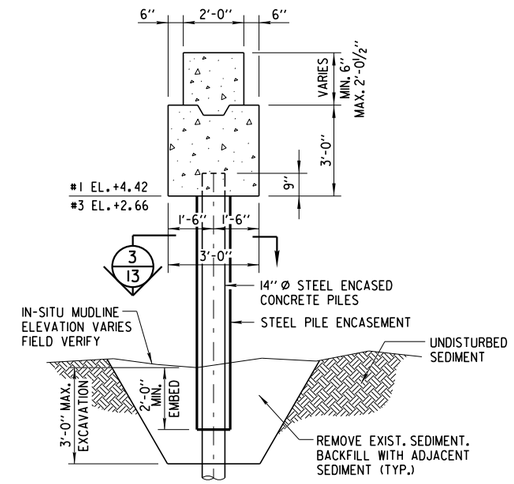

SECTION 1/13
PIER NO. 1 & NO. 3

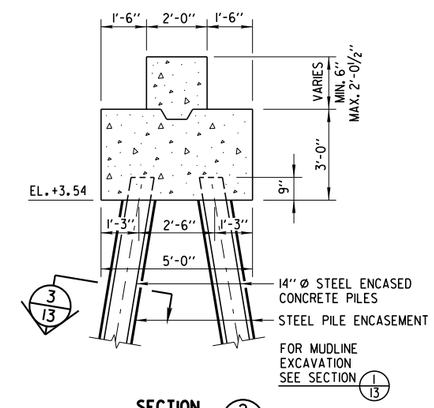

SECTION 2/13
PIER NO. 2

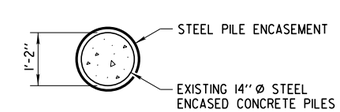

SECTION 3/13
ENCAPSLATED PIER PILE

NOTES:

1. STEEL PILE ENCASEMENT LENGTH VARIES FROM ROUGHLY 5 FEET TO 15 FEET. FINAL ENCASEMENT QUANTITIES MAY VARY SUBJECT TO INSPECTION DURING CONSTRUCTION. CONTRACTOR SHALL MEASURE FOR PAYMENT THE ACTUAL LENGTH INSTALLED IN THE FIELD BASED UPON REVIEW AND APPROVAL OF THE ENGINEER.
2. FOR BID PURPOSES, ASSUME THAT ALL PIPE PILES PRESENT UNEVEN SUBSTRATE SURFACES, DUE TO PITTING, REQUIRING AN EPOXY FILLER BASE COATING PRIOR TO ENCASEMENT INSTALLATION. ASSUME THAT 8 PILES HAVE A STEEL STRUT WHICH NEEDS TO BE REMOVED AND GROUND FLUSH.
3. ENCASEMENT SHALL FORM A TIGHT SEAL WITH EXISTING PILE CAPS. TROWEL THE SYSTEM EPOXY FILLER INTO ANY VOIDS AND FEATHER TO CREATE 1" MIN. BEVELED PROFILE AS INDICATED.
4. EXCAVATION AROUND PILES AT PIER 1 IS REQUIRED TO INSTALL FRP WRAP SYSTEM TO PLAN ELEVATION.
5. WATER LEVEL SHOWN WAS TAKEN ON 12-20-2011. WATER LEVEL FLUCTUATES BASED ON WEATHER CONDITIONS AND TIME OF YEAR.

City of Milwaukee

Department of Public Works

Infrastructure Services Division

SOUTH 1ST STREET BRIDGE OVER THE KINNICKINNIC RIVER
PIER 1, 2 AND 3 ELEVATION AND PLAN VIEW

REVISIONS

DESIGNED BY J.D.T.	
DRAWN BY C.J.R.	
CHECKED BY J.J.K.	
DATE 01/2014	SCALE NONE
JOB NUMBER BR100-14-0104	
SHEET NUMBER 13 OF 24	
OF 36	

W:\STR\B0204\PLANS\14_ABUTNORTH.DGN 01-02-2014

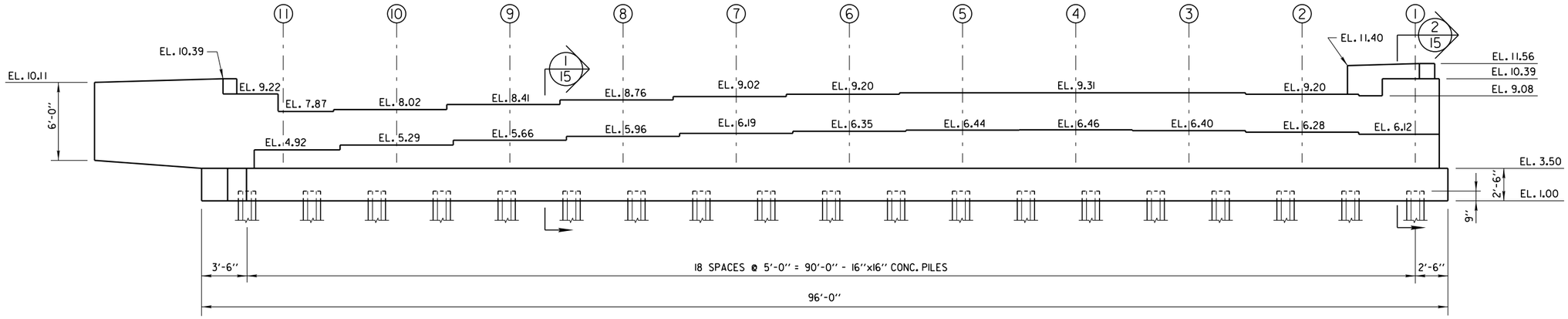

EXISTING NORTH ABUTMENT - ELEVATION VIEW

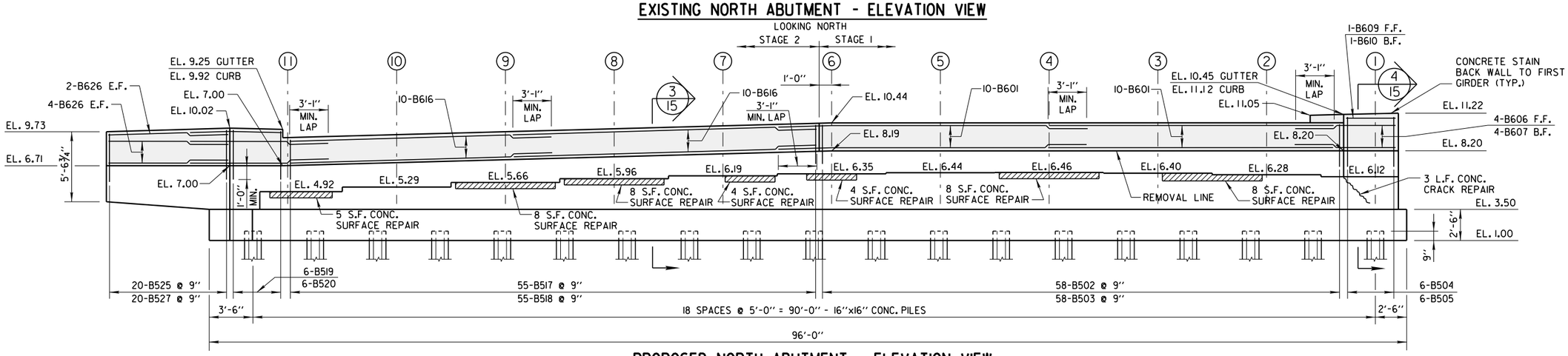

PROPOSED NORTH ABUTMENT - ELEVATION VIEW

LOOKING NORTH
(NEW CONCRETE BLOCKS NOT SHOWN FOR CLARITY)

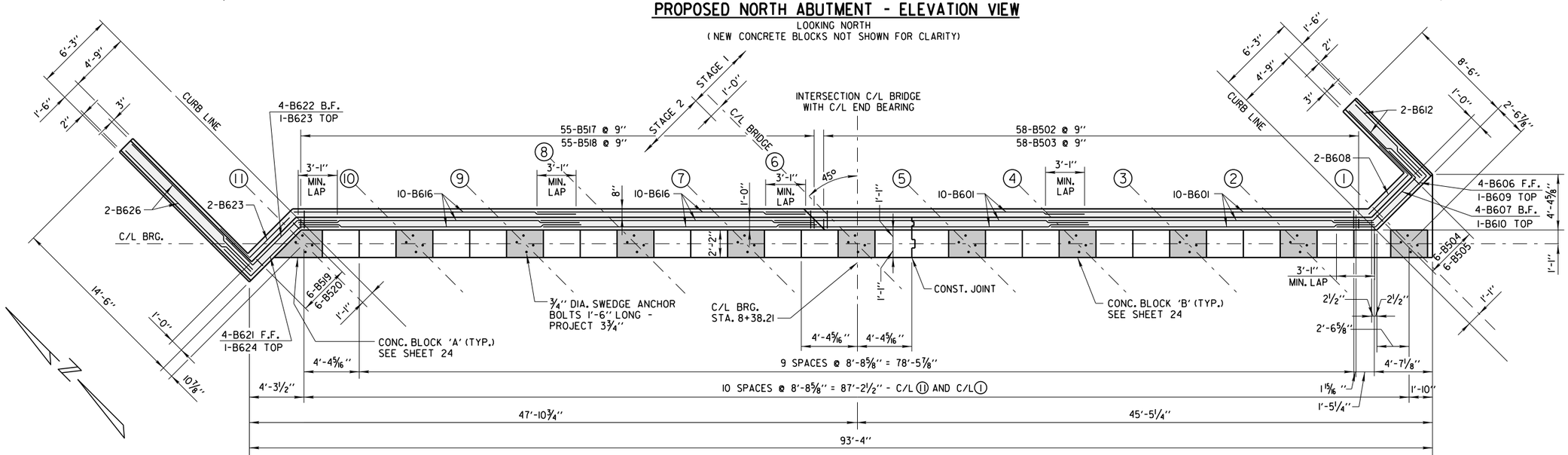

PROPOSED NORTH ABUTMENT - PLAN VIEW

(FOOTING NOT SHOWN FOR CLARITY)

NOTE:
SEAL ALL HORIZ. & VERT. JOINTS ON BACK FACE WITH 18-INCH RUBBERIZED MEMBRANE WATERPROOFING.

City of Milwaukee
Department of Public Works
Infrastructure Services Division

SOUTH 1ST STREET BRIDGE
OVER THE KINNICKINNIC RIVER
NORTH ABUTMENT ELEVATION AND PLAN VIEW

REVISIONS

DESIGNED BY J.D.T.	
DRAWN BY K.P.S.	
CHECKED BY J.J.K.	
DATE 01/2014	SCALE NONE
JOB NUMBER BR100-14-0104	
SHEET NUMBER 14 OF 24	
OF 36	

W:\STRUB0204\PLANS\ 15_ABUTNORTHDET.DGN 01-02-2014

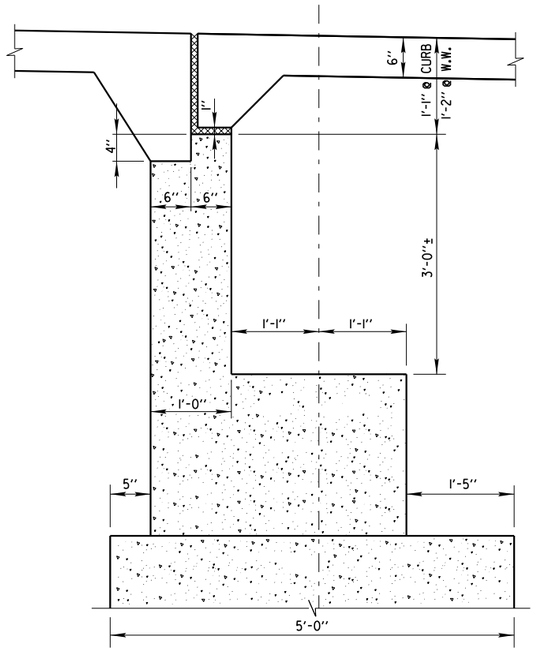

2/14 SECTION EXISTING ABUTMENT AT SIDEWALK

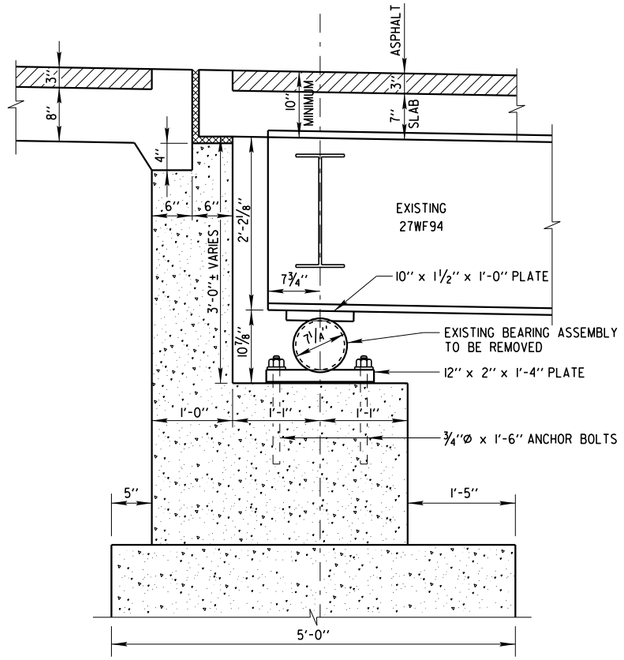

1/14 SECTION EXISTING ABUTMENT AT ROADWAY

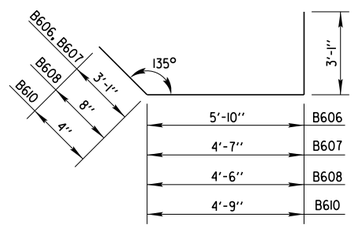

B606, B607, B608, B610

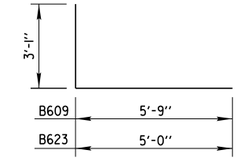

B609, B623

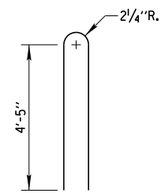

B514, B528

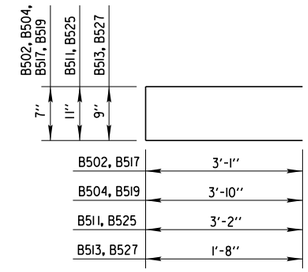

B502, B504, B511, B513, B517, B519, B525, B527

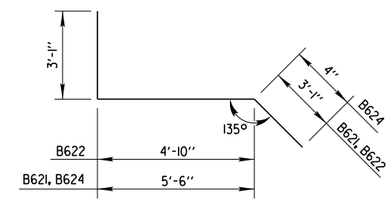

B621, B622, B624

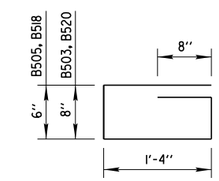

B503, B505, B518, B520

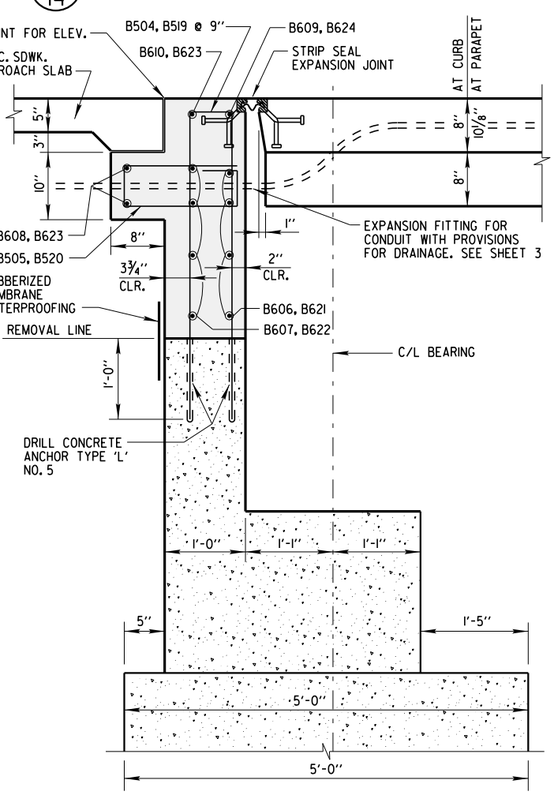

4/14 SECTION PROPOSED ABUTMENT AT SIDEWALK

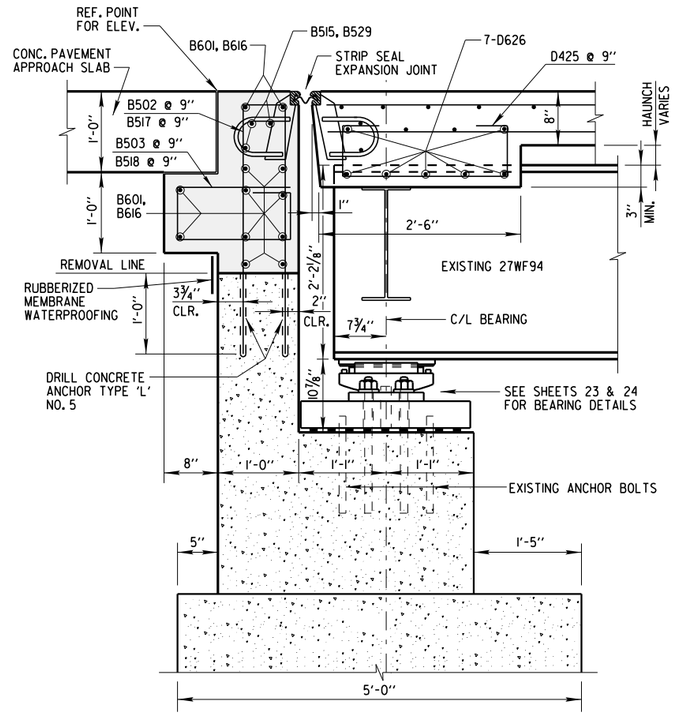

3/4 3/14 SECTION PROPOSED ABUTMENT AT ROADWAY

BILL OF BARS - NORTH ABUTMENT

BAR MARK	COATED	NO. REQ'D.	LENGTH	BENT	BAR SERIES	LOCATION
B601	×	20	25'-2"			STAGE 1 - BACK WALL - HORIZ.
B502	×	58	6'-6"	×		STAGE 1 - BACK WALL DOWEL - ROADWAY
B503	×	58	4'-2"	×		STAGE 1 - ROADWAY CORBEL
B504	×	6	8'-0"	×		STAGE 1 - BACK WALL DOWEL - SDWK.
B505	×	6	3'-10"	×		STAGE 1 - SDWK. - CORBEL
B606	×	4	11'-10"	×		STAGE 1 - BACK WALL - HORIZ. SDWK. F.F.
B607	×	4	10'-8"	×		STAGE 1 - BACK WALL - HORIZ. SDWK. B.F.
B608	×	2	8'-1"	×		STAGE 1 - SDWK. CORBEL HORIZ.
B609	×	1	8'-8"	×		STAGE 1 - BACK WALL - HORIZ. SDWK. TOP F.F.
B610	×	1	8'-0"	×		STAGE 1 - BACK WALL - HORIZ. SDWK. TOP B.F.
B511	×	12	7'-0"	×		STAGE 1 - N.W. WING WALL DOWEL
B612	×	10	8'-2"			STAGE 1 - WING WALL - HORIZ.
B513	×	12	3'-10"	×		STAGE 1 - WING WALL - CAP DOWEL
B514	×	13	9'-7"	×		STAGE 1 - WING WALL - RAILING DOWEL
B515	×	20	8'-0"			STAGE 1 - BACK WALL - STRIP SEAL ANCHOR
B616	×	20	21'-11"			STAGE 2 - BACK WALL - HORIZ.
B517	×	55	6'-6"	×		STAGE 2 - BACK WALL DOWEL - ROADWAY
B518	×	55	4'-2"	×		STAGE 2 - ROADWAY - CORBEL
B519	×	6	8'-0"	×		STAGE 2 - BACK WALL DOWEL - SDWK.
B520	×	6	3'-10"	×		STAGE 2 - SDWK. CORBEL
B621	×	4	11'-6"	×		STAGE 2 - BACK WALL - HORIZ. SDWK. F.F.
B622	×	4	10'-10"	×		STAGE 2 - BACK WALL - HORIZ. SDWK. B.F.
B623	×	3	7'-11"	×		STAGE 2 - SDWK. CORBEL HORIZ.
B624	×	1	8'-9"	×		STAGE 2 - BACK WALL - HORIZ. SDWK. TOP F.F.
B525	×	20	7'-0"	×		STAGE 2 - N.W. WING WALL DOWEL
B626	×	10	14'-2"			STAGE 2 - WING WALL - HORIZ.
B527	×	20	3'-10"	×		STAGE 2 - WING WALL - CAP DOWEL
B528	×	19	9'-7"	×		STAGE 2 - WING WALL - RAILING DOWEL
B529	×	18	8'-0"			STAGE 2 - BACK WALL - STRIP SEAL ANCHOR

City of Milwaukee

Department of Public Works

Infrastructure Services Division

SOUTH 1ST STREET BRIDGE
OVER THE KINNICKINNIC RIVER
NORTH ABUTMENT SECTION AND BILL OF BARS

REVISIONS

DESIGNED BY J.D.T.
DRAWN BY K.P.S.
CHECKED BY J.J.K.
DATE 01/2014
SCALE NONE
JOB NUMBER BR100-14-0104
SHEET NUMBER 15 OF 24
OF 36

W:\STR\B0204\PLANS\ 16_WINGWALLNORTH.DGN 01-02-2014

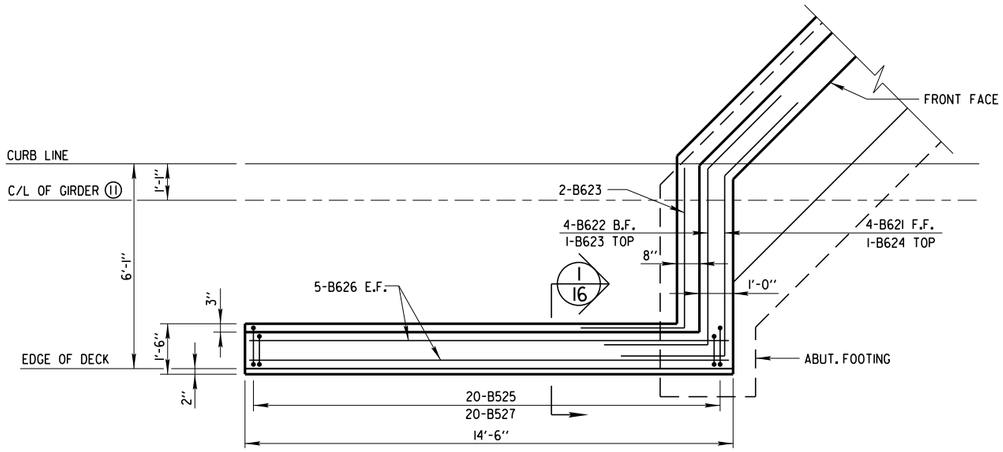

PLAN OF NORTHWEST WING WALL

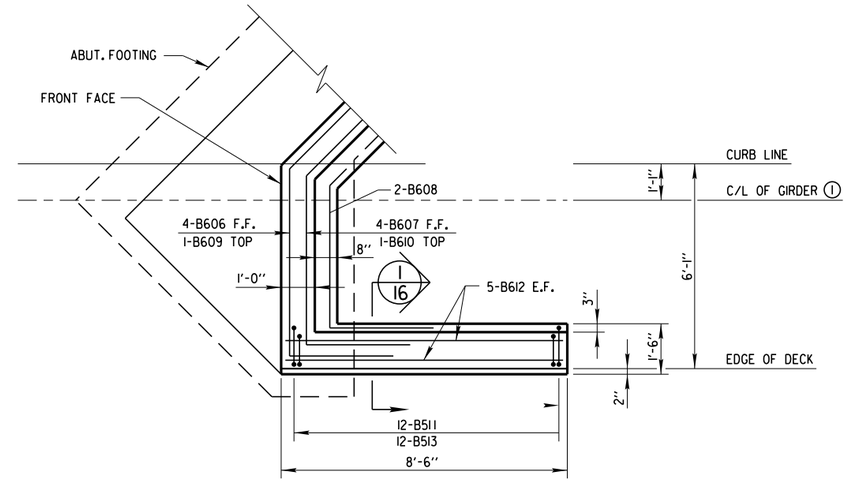

PLAN OF NORTHEAST WING WALL

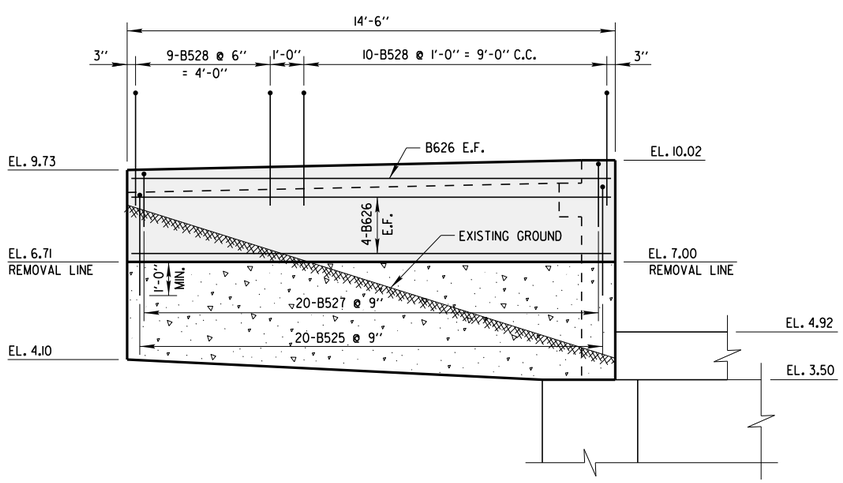

ELEVATION OF NORTHWEST WING WALL

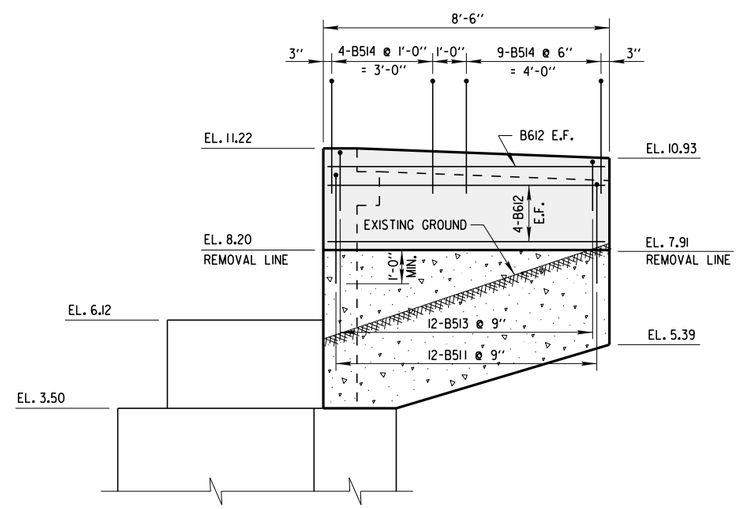

ELEVATION OF NORTHEAST WING WALL

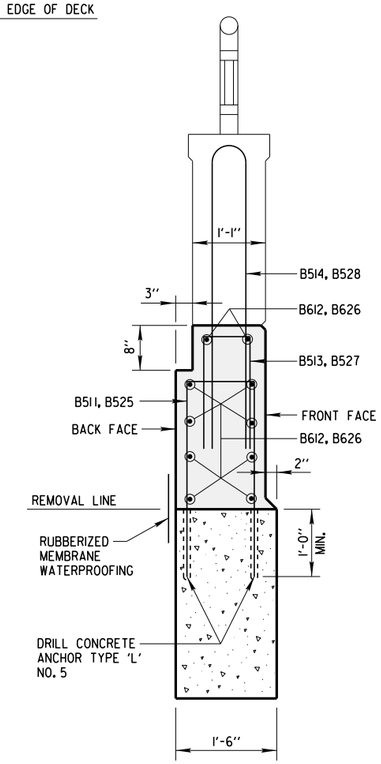

TYPICAL SECTION THRU WING WALL

(1/16)

NOTE:

CONCRETE STAINING TO BE APPLIED FROM TOP OF WING WALL TO EXISTING GROUND LINE.

City of Milwaukee

Department of Public Works

Infrastructure Services Division

SOUTH 1ST STREET BRIDGE
OVER THE KINNICKINNIC RIVER
NORTH ABUTMENT WING WALL DETAILS

REVISIONS

DESIGNED BY J.D.T.	
DRAWN BY K.P.S.	
CHECKED BY J.J.K.	
DATE 01/2014	SCALE NONE
JOB NUMBER BR100-14-0104	
SHEET NUMBER 16 OF 24	
OF 36	

W:\STR\B0204\PLANS\17_RAILING.DGN 10-28-2013

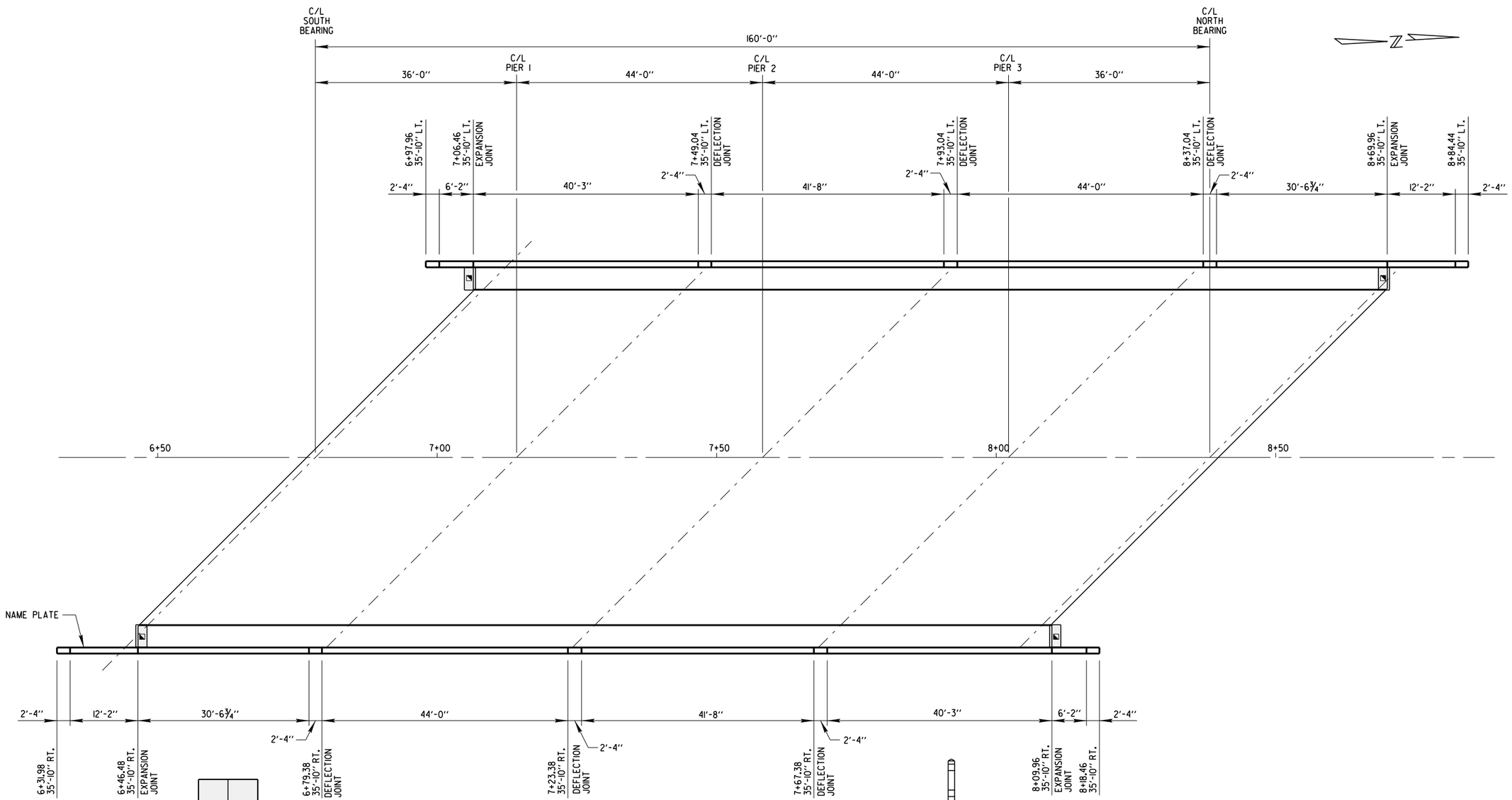

RAILING PLAN

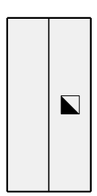

SIDEWALK COVER PLATE DETAIL

◪ = AREA OF MOVEMENT OF THE COVER PLATE. ORIENT TO ALIGN WITH DIRECTION OF TRAFFIC.

NOTE:
SEE SHEET NO. 22 FOR DETAILS REGARDING ORIENTATION OF COVER PLATE MOVEMENT.

NOTES:

WHEN PARAPETS ARE POURED CONTINUOUSLY FROM END TO END, THEY SHALL BE SEPARATED AT THE DEFLECTION JOINTS BY A PIECE OF 1/8" ZINC OR PLASTIC PLATE CUT AS SHOWN IN THE SECTION BY THE SHADED AREA. IF CONSTRUCTION JOINTS IN PARAPETS ARE USED AT THE DEFLECTION JOINTS, ONE SIDE OF JOINT SHALL BE COATED WITH AN APPROVED LIQUID BOND BREAKER AND PLATE SEPARATORS MAY BE OMITTED.

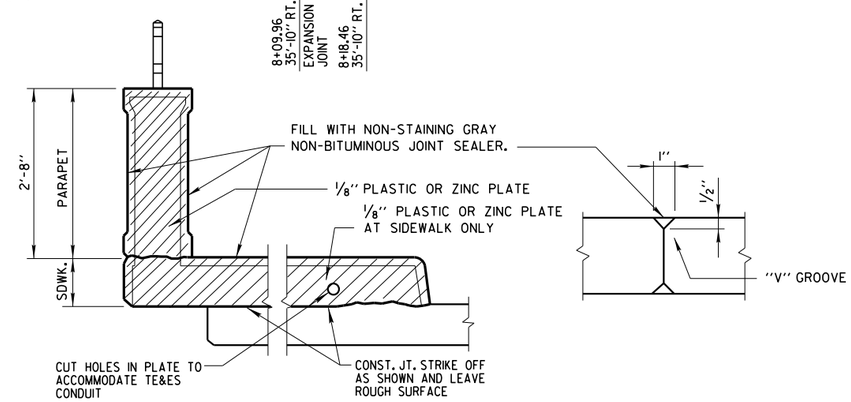

SECTION 1/3 1/4 1/18
ABOVE PIERS AT DEFLECTION JOINTS

City of Milwaukee
Department of Public Works
Infrastructure Services Division

SOUTH 1ST STREET BRIDGE OVER THE KINNICKINNIC RIVER
RAILING PLAN

REVISIONS

DESIGNED BY J.D.T.	
DRAWN BY K.P.S.	
CHECKED BY J.J.K.	
DATE 01/2014	SCALE NONE
JOB NUMBER BR100-14-0104	
SHEET NUMBER 17 OF 24	
OF 36	

W:\STR\B0204\PLANS\ 18_RAILINGELEV.DGN 01-02-2014

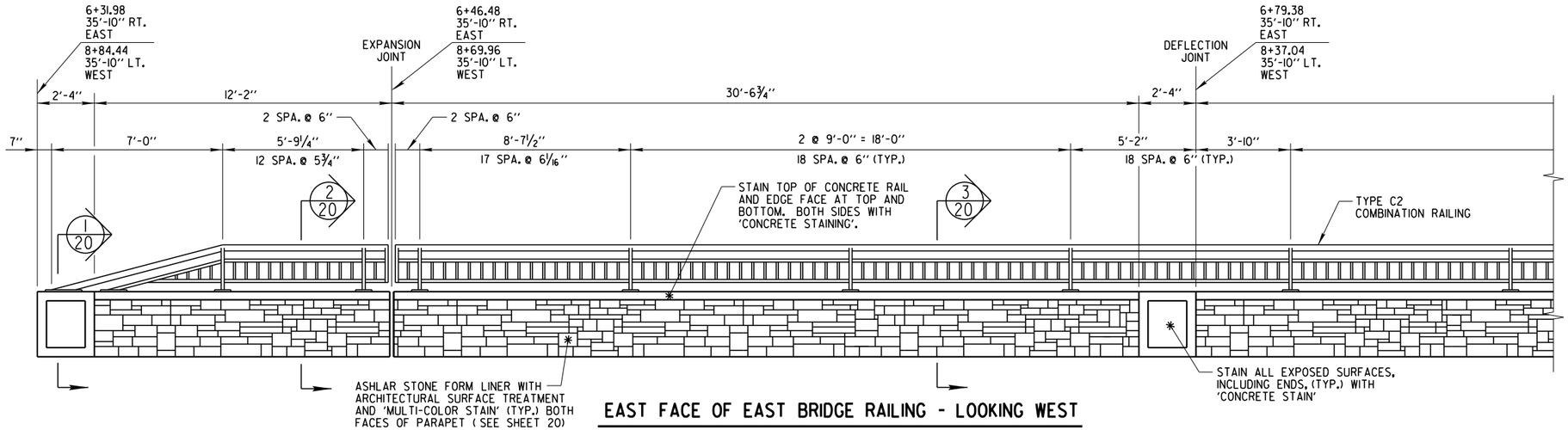

EAST FACE OF EAST BRIDGE RAILING - LOOKING WEST

WEST FACE OF WEST BRIDGE RAILING - LOOKING EAST

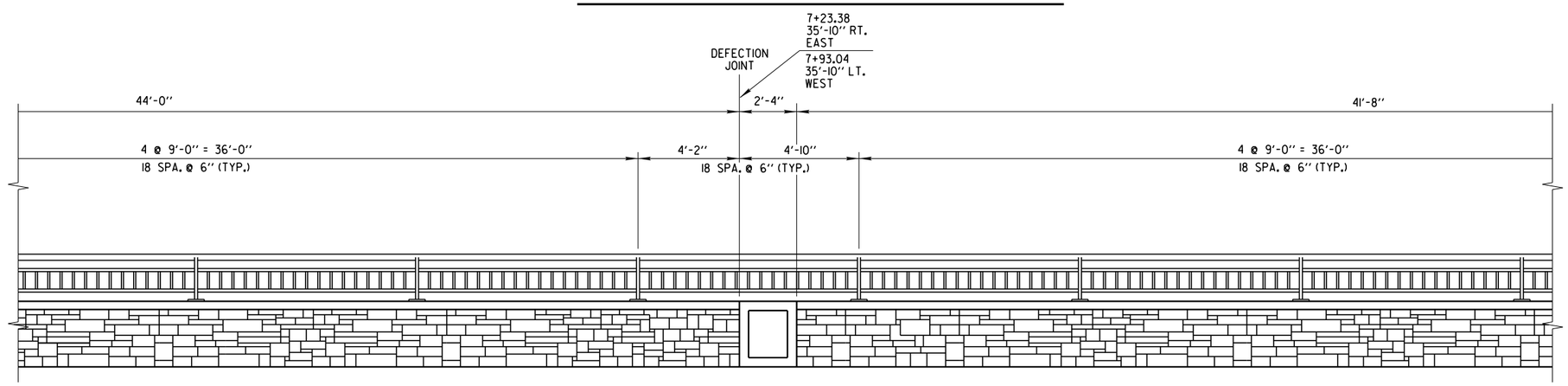

EAST FACE OF EAST BRIDGE RAILING - LOOKING WEST

WEST FACE OF WEST BRIDGE RAILING - LOOKING EAST

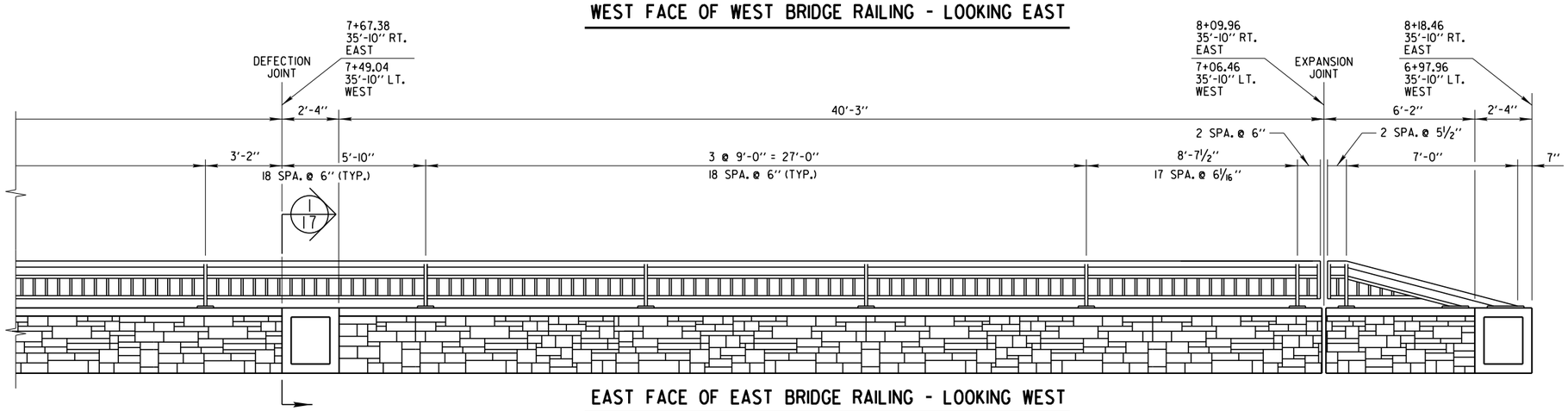

EAST FACE OF EAST BRIDGE RAILING - LOOKING WEST

WEST FACE OF WEST BRIDGE RAILING - LOOKING EAST

City of Milwaukee

Department of Public Works

Infrastructure Services Division

SOUTH 1ST STREET BRIDGE
OVER THE KINNICKINNIC RIVER
RAILING ELEVATIONS

REVISIONS

DESIGNED BY J.J.K.	
DRAWN BY K.P.S.	
CHECKED BY J.D.T.	
DATE 01/2014	SCALE NONE
JOB NUMBER BR100-14-0104	
SHEET NUMBER 18 OF 24	
OF 36	

W:\STR\B0204\PLANS\19_RAILINGBAR.DGN 10-25-2013

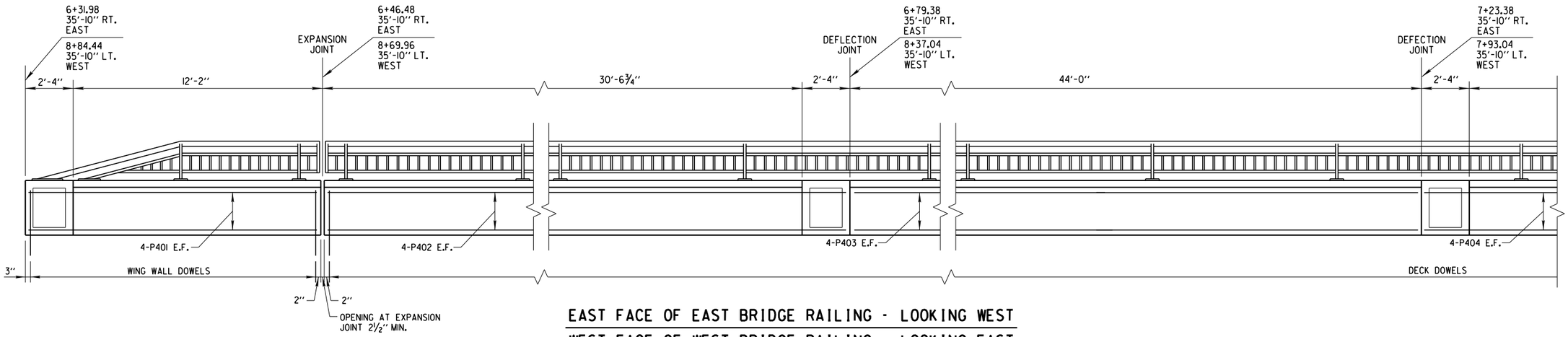

EAST FACE OF EAST BRIDGE RAILING - LOOKING WEST

WEST FACE OF WEST BRIDGE RAILING - LOOKING EAST

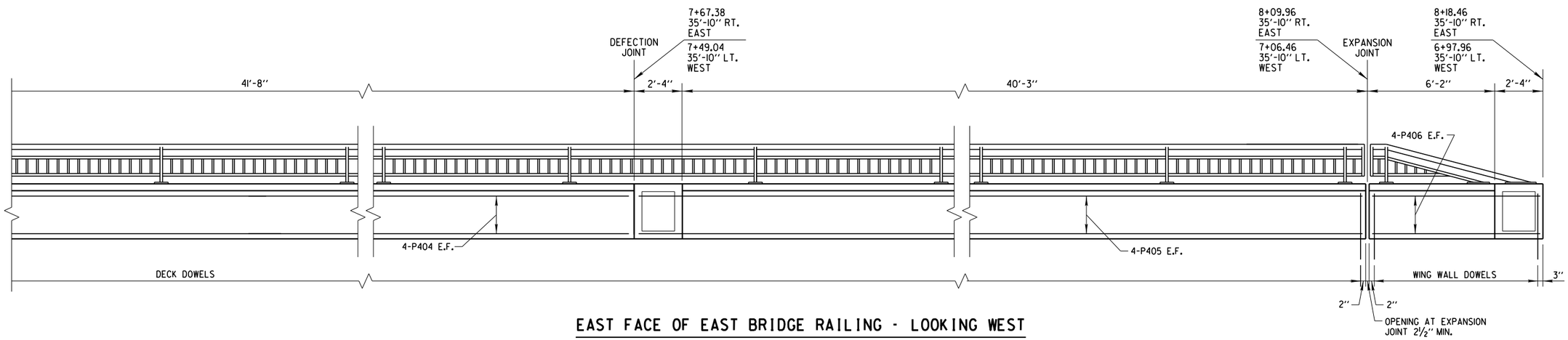

EAST FACE OF EAST BRIDGE RAILING - LOOKING WEST

WEST FACE OF WEST BRIDGE RAILING - LOOKING EAST

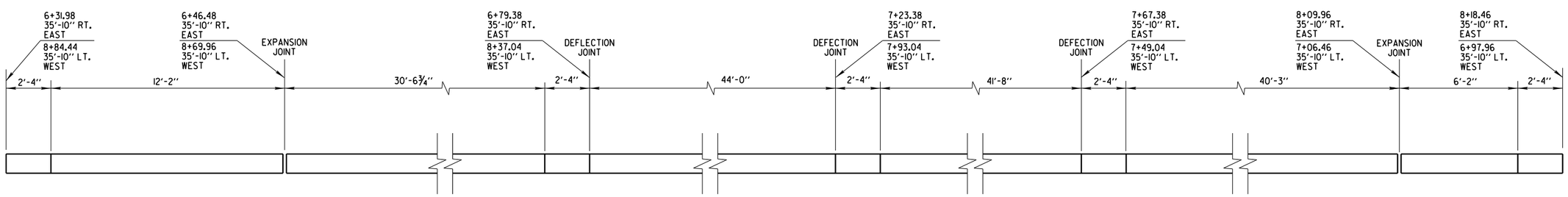

PLAN VIEW OF EAST BRIDGE RAILING

PLAN VIEW OF WEST BRIDGE RAILING (ROTATED 180 DEGREES)

City of Milwaukee

Department of Public Works

Infrastructure Services Division

SOUTH 1ST STREET BRIDGE
OVER THE KINNICKINNIC RIVER
RAILING BAR DETAILS AND RAILING PLAN

REVISIONS

DESIGNED BY J.J.K.

DRAWN BY K.P.S.

CHECKED BY J.D.T.

DATE 01/2014 | SCALE NONE

JOB NUMBER BR100-14-0104

SHEET NUMBER 19 OF 24

OF 36

W:\STR\B0204\PLANS\ 20_RAILINGDET.DGN 01-02-2014

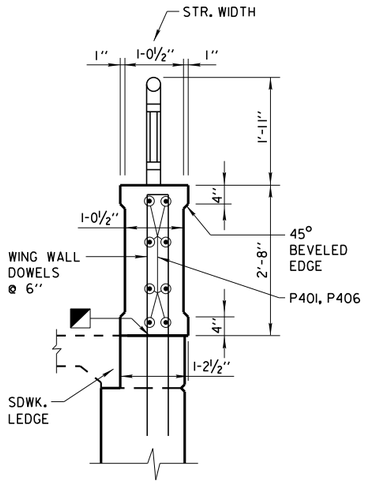

SECTION 1/18

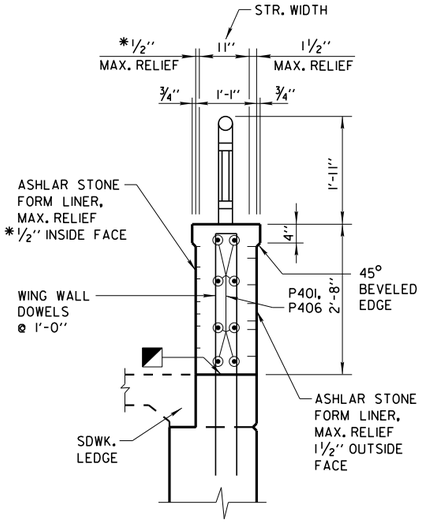

SECTION 2/18

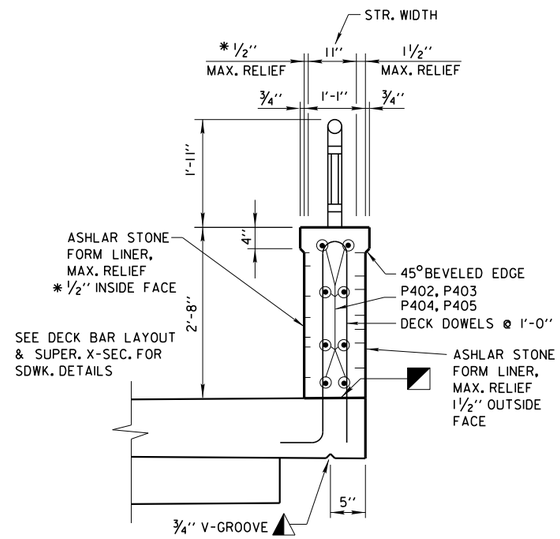

SECTION 3/18

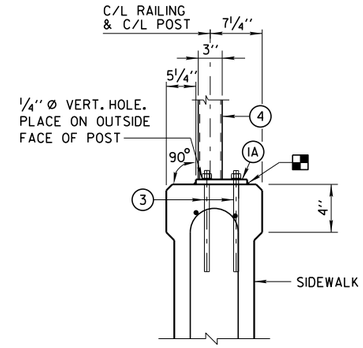

SECTION THRU PARAPET ON BRIDGE

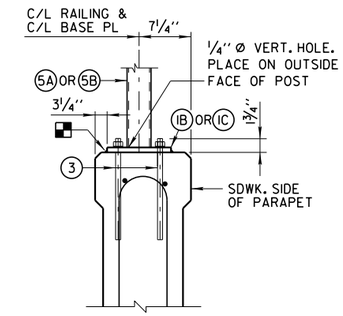

ANCHORAGE FOR END RAIL

NOTE:
SEE LEGEND & RAILING NOTES ON SHEET 21

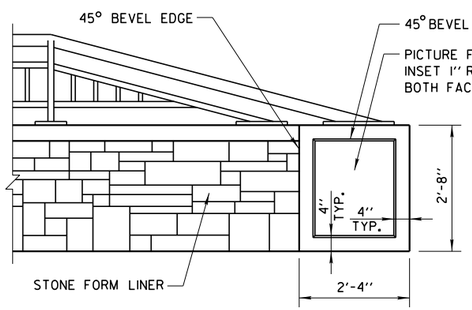

RAILING PICTURE FRAME INSET ELEVATION

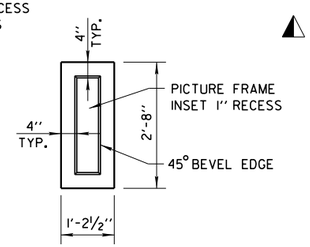

END RAILING PICTURE FRAME INSET ELEVATION

HORIZ. CONST. JOINT-STRIKE OFF AS SHOWN AND LEAVE ROUGH.

END 2'-0" AWAY FROM FACE OF ABUT.

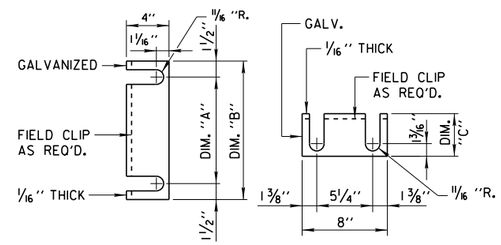

END RAIL SHIM DETAIL

8" X 1'-1" BASE PLATE (1B) DIM. "A" = 10", DIM. "B" = 1'-1", DIM. "C" = 6½"
8" X 1'-6" BASE PLATE (1C) DIM. "A" = 1'-3", DIM. "B" = 1'-6", DIM. "C" = 9"
(2 SETS PER POST)

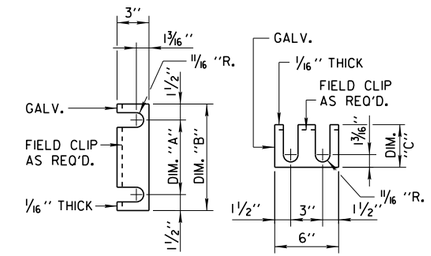

RAIL POST SHIM DETAIL

6" X 8" BASE PL (1A) DIM. "A" = 5", DIM. "B" = 8", DIM. "C" = 4"
(2 SETS PER POST)

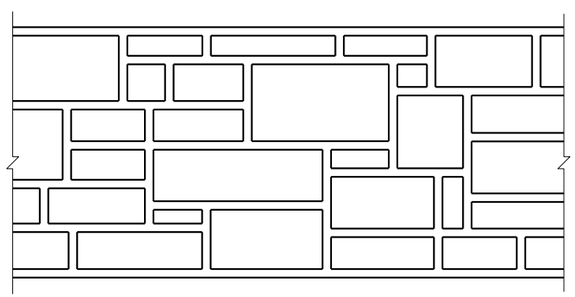

ASHLAR STONE FORM LINER

STONE SIZE = 4-INCH TO 31-INCH, RELIEF = *½-INCH
FOR ROADWAY FACE AND 1½" OUTSIDE FACE OF PARAPET WALL

* NOTE:
MAX. RELIEF OF 1½" ALLOWED FOR JOINTS UP TO ¾" WIDTH ON ROADWAY FACE.

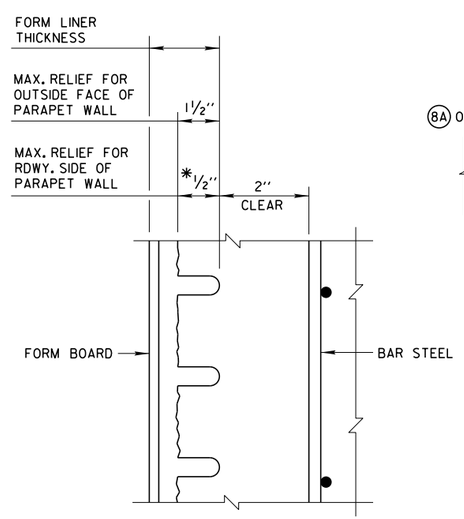

SECTION THRU FORM LINER

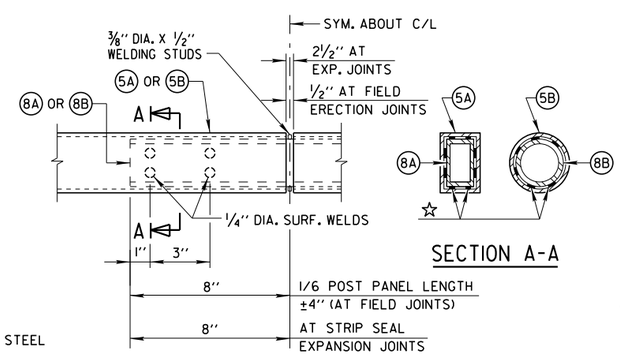

FIELD ERECTION JOINT DETAIL

☆ MIN. ⅝" FLAT SURFACE DIA. PUNCHINGS OR STUDS MAY BE USED AS AN ALTERNATIVE.

SECTION A-A

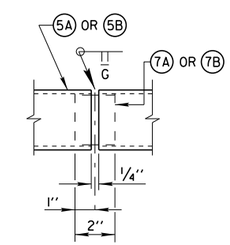

SHOP RAIL SPLICE DETAIL

(LOCATION MUST BE SHOWN ON SHOP DRAWINGS)

BILL OF BARS - VERTICAL PARAPET WALL

BAR MARK	COAT	NO. REQ'D.	LENGTH	BENT	BAR SERIES	LOCATION
P401	X	16	14'-1"			PARAPET WALL - WING WALL - HORIZONTAL
P402	X	16	32'-5"			PARAPET WALL - DECK - HORIZONTAL
P403	X	16	43'-8"			PARAPET WALL - DECK - HORIZONTAL
P404	X	16	43'-8"			PARAPET WALL - DECK - HORIZONTAL
P405	X	16	42'-3"			PARAPET WALL - DECK - HORIZONTAL
P406	X	16	8'-1"			PARAPET WALL - WING WALL - HORIZONTAL

City of Milwaukee
Department of Public Works
Infrastructure Services Division

SOUTH 1ST STREET BRIDGE
OVER THE KINNICKINNIC RIVER
FORM LINER DETAILS AND BILL OF BARS

REVISIONS

DESIGNED BY J.D.T.
DRAWN BY K.P.S.
CHECKED BY J.J.K.
DATE 01/2014
SCALE NONE
JOB NUMBER BR100-14-0104
SHEET NUMBER 20 OF 24
OF 36

W:\STR\B0204\PLANS\ 21.STEELRAILINGDET.DGN 01-02-2014

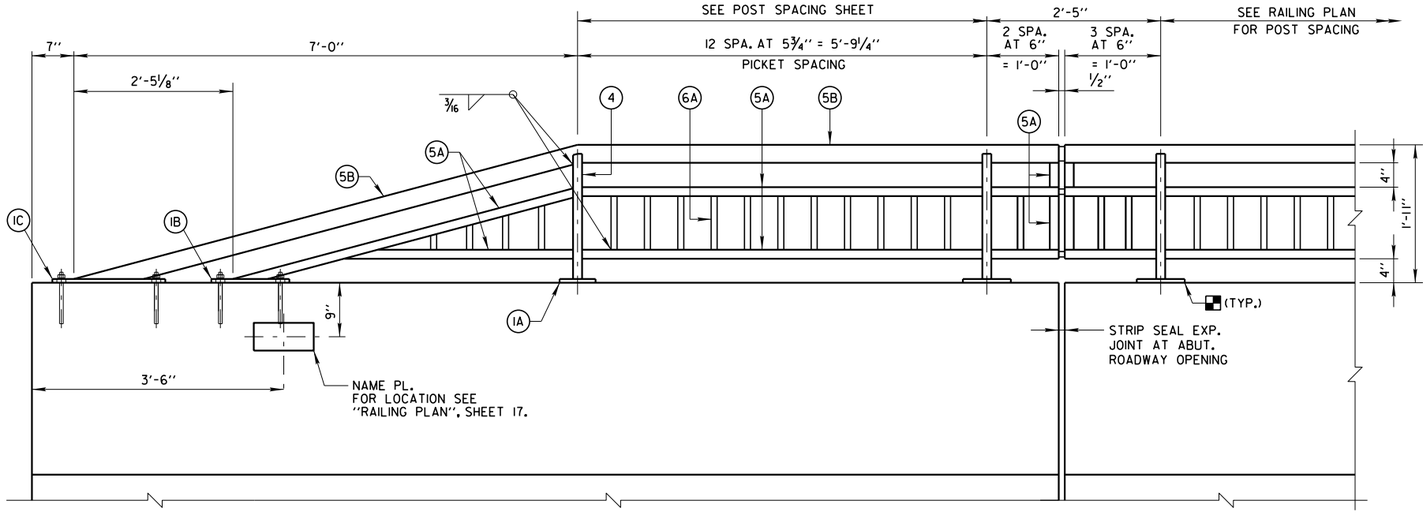

INSIDE ELEVATION OF PARAPET

PICTURE FRAME INSET AND ARCHITECTURAL SURFACE TREATMENT NOT SHOWN

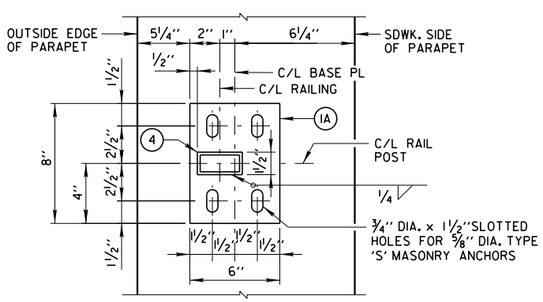

TYPICAL RAIL POST BASE PLATE

FOR 3" X 1½" X 3/16" POSTS (4)

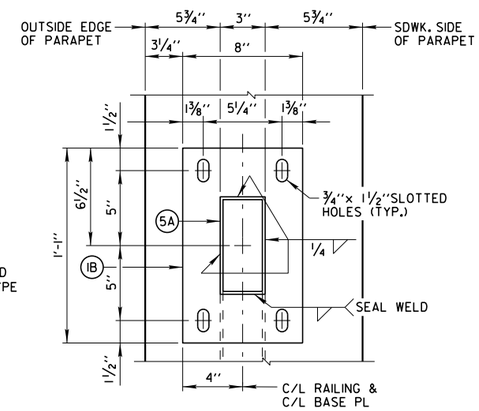

END RAIL BASE PLATE

FOR 3"x1½"x3/16" POSTS (5A)

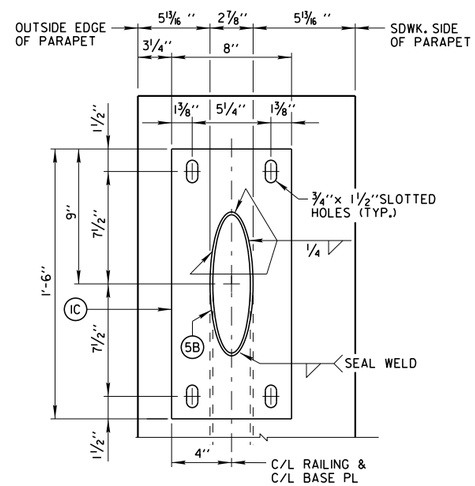

END RAIL BASE PLATE

FOR 2½" DIA. STD. PIPE RAIL (5B)

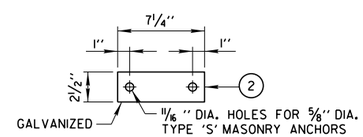

END RAIL ANCHOR PLATE

FOR END RAIL BASE PLATES (IB) (IC)

2 REQ'D PER END RAIL BASE PL

LEGEND

- (IA) PLATE ⅝" x 6" x 8" WITH ¾" x 1½" SLOTTED HOLES.
- (IB) PLATE ⅝" x 8" x 1'-1" WITH ¾" x 1½" SLOTTED HOLES.
- (IC) PLATE ⅝" x 8" x 1'-6" WITH ¾" x 1½" SLOTTED HOLES.
- (2) ¼" x 2½" x 7¼" ANCHOR PLATE WITH 11/16" DIA. HOLES FOR THREADED RODS NO. 3.
- (3) 4 STAINLESS STEEL CONCRETE MASONRY ANCHORS (MIN. TENSILE STRENGTH = 70 KSI) TYPE 'S' (EPOXY), ⅝" DIA. MINIMUM PULLOUT CAPACITY OF 13 KIPS. EMBED A MIN. OF 7" FOR RAIL POSTS AND 5" FOR END RAILS.
- (4) STRUCTURAL TUBING 3" x 1½" x 3/16". PLACE VERTICAL. WELD TO NO. 1 & NO. 5.
- (5A) STRUCTURAL TUBING 3" x 1½" x 3/16" RAILS. WELD TO NO. 1 & NO. 4. INSIDE OF TUBE TO BE PAINTED AT ALL FIELD ERECTION & EXPANSION JOINTS.
- (5B) STRUCTURAL TUBING 2½" DIA. (STANDARD SIZE) (2.875" O.D.). WELD TO NO. 1 & NO. 4. INSIDE OF PIPE TO BE PAINTED AT ALL FIELD ERECTION & EXPANSION JOINTS.
- (6A) BAR 1" x 1" PICKETS. WELD TO NO. 5 (SPACE AT 6" MAX. C/L TO C/L SPACING). PLACE VERTICAL.
- (7A) RECTANGULAR SLEEVE FABRICATED FROM 3/16" PLATES. PROVIDE "SLIDING FIT".
- (7B) CIRCULAR SLEEVE FABRICATED FROM STRUCTURAL TUBING 2" DIA. (STANDARD SIZE) (2.375" O.D.).
- (8A) RECTANGULAR SLEEVE FABRICATED FROM 3/16" PLATES. (1'-4" AT FIELD ERECTION JOINTS) (1'-4" AT STRIP SEAL EXPANSION JOINTS.)
- (8B) CIRCULAR SLEEVE FABRICATED FROM STRUCTURAL TUBING 2" DIA. (STANDARD SIZE) (2.375" O.D.). (1'-4" AT FIELD ERECTION JOINTS) (1'-4" AT STRIP SEAL EXPANSION JOINTS.)

RAILING NOTES

BID ITEM SHALL BE "RAILING STEEL TYPE C2 GALVANIZED P-40-829", WHICH SHALL INCLUDE ALL WORK SHOWN ON SHEETS 20 AND 21.

POST BASE PLATES SHALL BE FLAT WITH ALL SURFACES SMOOTH AND FREE FROM WARP AND ALL EDGES SMOOTH, STRAIGHT AND VERTICAL. ALL PLATE CUTS SHALL BE MACHINE OR MACHINE FLAME CUTS.

NO. 1, 2, 6, 7 AND 8 SHALL CONFORM TO ASTM A709 GRADE 36. STRUCTURAL TUBING SHALL CONFORM TO ASTM A500 GRADE B (NO. 4 & NO. 5).

ANCHORAGES SHALL BE ACCURATELY PLACED TO PROVIDE CORRECT ALIGNMENT OF RAILING. SET NORMAL TO GRADE.

CUT BOTTOM OF POST TO MAKE POST VERTICAL IN BOTH TRANSVERSE AND LONGITUDINAL DIRECTION.

STEEL SHIMS SHALL BE PROVIDED & USED UNDER BASE PLATES WHERE REQUIRED FOR ALIGNMENT, AND SHALL BE GALVANIZED OR STAINLESS STEEL.

CAULK AROUND PERIMETER OF BASE PLATES, NO. 1, AND FILL BOLT SLOT OPENINGS IN SHIMS AND BASE PLATES WITH NON-STAINING GRAY NON-BITUMINOUS JOINT SEALER.

ALL JOINTS AND RECESSES IN CONCRETE PARAPET ARE TO BE VERTICAL.

ALL MATERIAL (EXCEPT NO. 3) SHALL BE GALVANIZED AFTER FABRICATION. PRIOR TO GALVANIZING THE STEEL RAILING SHALL BE GIVEN A NO. 6 BLAST CLEANING PER SSPC SPECIFICATIONS. PAINT OVER GALVANIZING WITH AN APPROVED TIE COAT AND TOP AS SPECIFIED IN THE "BRIDGE SPECIAL PROVISIONS". THE RAILING COLOR IS SPECIFIED IN THE SPECIAL PROVISIONS.

VENT HOLES SHALL BE DRILLED IN POST AND RAIL MEMBERS AS REQUIRED TO FACILITATE GALVANIZING AND DRAINAGE.

RAILING SHALL BE FABRICATED IN LENGTHS THAT INCLUDE 3 OR 4 POSTS.

TOUCH-UP PAINTING TO BE DONE AT COMPLETION OF STEEL RAILING INSTALLATION TO THE SATISFACTION OF THE ENGINEER AT NO EXTRA COST.

City of Milwaukee

Department of Public Works

Infrastructure Services Division

SOUTH 1ST STREET BRIDGE
OVER THE KINNICKINNIC RIVER
STEEL RAILING DETAILS

REVISIONS

DESIGNED BY J.D.T.	
DRAWN BY K.P.S.	
CHECKED BY J.J.K.	
DATE 01/2014	SCALE NONE
JOB NUMBER BR100-14-0104	
SHEET NUMBER 21 OF 24	
OF 36	

W:\STR\B0204\PLANS\ 22_EXPJOINT.DGN 01-02-2014

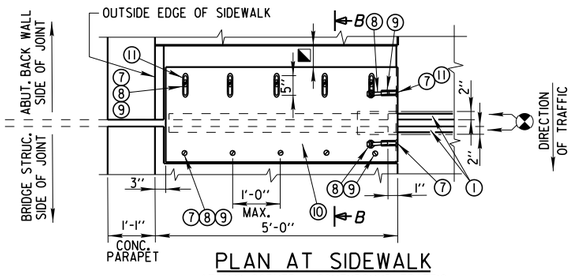

PLAN AT SIDEWALK

AT N.W. CORNER - SOUTHBOUND TRAFFIC AND S.E. CORNER - NORTHBOUND TRAFFIC

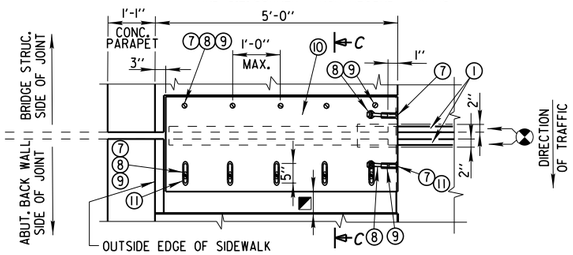

PLAN AT SIDEWALK

AT N.E. CORNER - NORTHBOUND TRAFFIC AND S.W. CORNER - SOUTHBOUND TRAFFIC

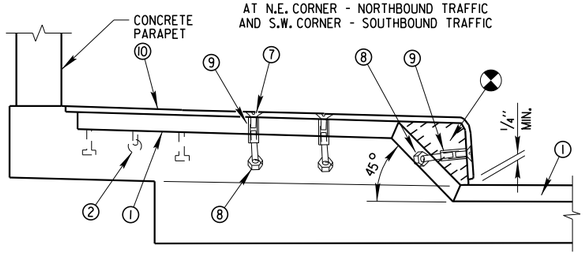

SECTION AT SIDEWALK

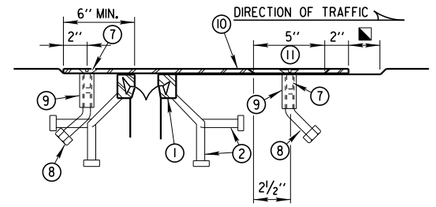

EXPANSION JOINT AT SIDEWALK SECTION B-B

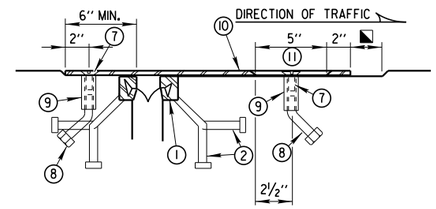

EXPANSION JOINT AT SIDEWALK SECTION C-C

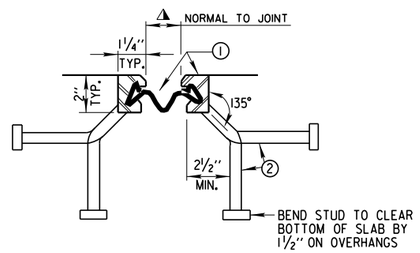

SECTION THRU JOINT

EXTERIOR GIRDER TO EDGE OF SLAB & AT PARAPETS, MEDIUMS & SIDEWALKS

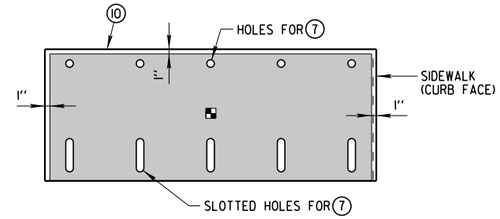

PLAN OF SIDEWALK COVER PLATE WITH SLIP-RESISTANT SURFACE

APPROVED SLIP-RESISTANT APPLIED SURFACES FOR STEEL PLATES		
PRODUCT	MANUFACTURER	CONTACT AT
SLIPNOT GRADE 2, STEEL	W. S. MOLNAR COMPANY	1-800-SLIPNOT
ALGRIP, STEEL	ROSS TECHNOLOGY CORP.	1-800-345-8170

- PLACE SLIP-RESISTANT SURFACE ON TOP WALKING SURFACE IN SHADED AREA ONLY (NOT ON CURB FACE). GALVANIZE PLATE AFTER SLIP-RESISTANT SURFACE IS APPLIED.
- BLOCK OUT CONCRETE 2" EACH SIDE OF JOINT OPENING.
- JOINT OPENING DIMENSION ALONG SKEW PLUS ½".

LEGEND:

1. NEOPRENE STRIP SEAL (4-INCH) & STEEL EXTRUSIONS. SET JOINT OPENING AT 1¾" WHEN EXPANSION LENGTH ≤ 230'-0". JOINT OPENINGS GIVEN NORMAL TO JOINT.
2. STUDS ⅝" Ø x 6⅜" LONG AT 6" ALTERNATE CENTERS. WELD TO EXTRUSIONS & BEND AS SHOWN AFTER WELDING.
2A. ½" THICK ANCHOR PLATE WITH ⅝" Ø ROD (OR ALTERNATE STRIP SEAL ANCHOR). WELD ROD TO ANCHOR PLATE, WELD ANCHOR PLATE TO NO. 1 AT 1'-6" CTRS. BETWEEN GIRDERS.
3. ¾" Ø THREADED ROD WITH 2 NUTS AND WASHERS. FOR STEEL GIRDERS WELD THREADED ROD TO TOP FLANGE OR ATTACH BY BOLTING THRU FLANGE. ON ABUTMENT SIDE GROUT THREADED ROD INTO FIELD DRILLED HOLES IN ABUTMENT BACK WALL AS SHOWN.
4. ¾" Ø THREADED ROD WITH NUT. TACK WELD NUT TO NO. 5.
5. FABRICATE SUPPORT FROM 3" x ½" BAR AS SHOWN OR EQUIVALENT. ONE PER GIRDER PER SIDE. SHOP OR FIELD WELD TO NO. 1. IF FIELD WELDED, COVER WELDED AREAS WITH EPOXY-COATING MATERIAL. PROVIDE 1½" Ø HOLE FOR NO. 3 & 1" Ø HOLE FOR NO. 4.
7. ¾" Ø x 1½" STAINLESS STEEL SOCKET FLAT HEAD SCREWS WITH ANTI-SEIZE LUBRICANT. PLACE IN COUNTERSUNK HOLE. RECESS 1/16" BELOW PLATE SURFACE.
8. ¾" Ø x 4" GALVANIZED HEX HEAD BOLT. BEND 45°.
9. ¾" Ø x 2¼" GALVANIZED THREADED COUPLING.
10. SIDEWALK COVER PLATE ⅜" x (2'-0" WIDE FOR SKEWS TO 45°) x LIMITS SHOWN. BEND DOWN FACE OF SIDEWALK WITH HOLES FOR NO. 7. GALVANIZE PLATE AFTER SLIP-RESISTANT SURFACE IS APPLIED
11. 1" x 5" SLOTTED COUNTERSUNK HOLE FOR NO. 7. SLOT PARALLEL TO DIRECTION OF MOVEMENT.

NOTES:

ONE FIELD SPLICE PERMITTED IN STEEL EXTRUSIONS, UNLESS MORE ARE REQUIRED FOR STAGED CONSTRUCTION, HANDLING OR GALVANIZED REQUIREMENTS. IF USED, DETAILS SHALL BE SUBMITTED FOR APPROVAL. NO SPLICING PERMITTED IN NEOPRENE STRIP SEAL.

AFTER FABRICATION, BUT BEFORE SHIPMENT, STRAIGHTEN STEEL EXTRUSIONS SUCH THAT THEY SHALL BE FREE FROM WARP, TWIST & SWEEP.

FABRICATOR SHALL PROVIDE MEANS OF KEEPING GALVANIZED EXTRUSIONS CLEAN AND SMOOTH DURING SHIPMENT AND PRIOR TO APPLYING LUBRICANT ADHESIVE FOR NEOPRENE GLAND INSTALLATION.

SANDBLAST PLATES, SUPPORTS AND EXTRUSIONS AFTER FABRICATION IN ACCORDANCE WITH SSPC SP. #6 "COMMERCIAL BLAST CLEANING". AFTER BLAST CLEANING, THE PLATES, SUPPORTS AND EXTRUSIONS SHALL BE HOT DIPPED GALVANIZED. SLIP-RESISTANT SURFACE IS APPLIED TO SIDEWALK COVER PLATES BY THE MANUFACTURER AND THEN HOT DIPPED GALVANIZED TO THEIR RECOMMENDATIONS TO MAINTAIN THE INTEGRITY OF THIS SURFACE.

ANCHOR SYSTEM NO. 8 AND NO. 9 SHALL CONFORM TO ASTM A307 AND SHALL BE GALVANIZED IN ACCORDANCE WITH ASTM A153 CLASS C & D.

STRIP SEAL EXPANSION JOINT ASSEMBLY, INCLUDING ANCHOR STUDS AND HARDWARE WILL BE PAID FOR AT THE LUMP SUM PRICE BID FOR "EXPANSION DEVICE (P-40-829)".

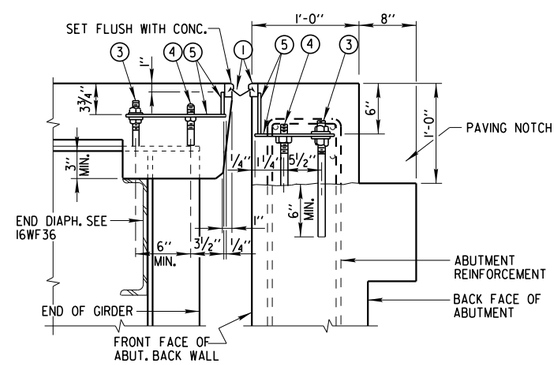

TYPICAL SECTION THRU ROADWAY JOINT AT STEEL GIRDER

NORMAL TO C/L SUBSTRUCTURE

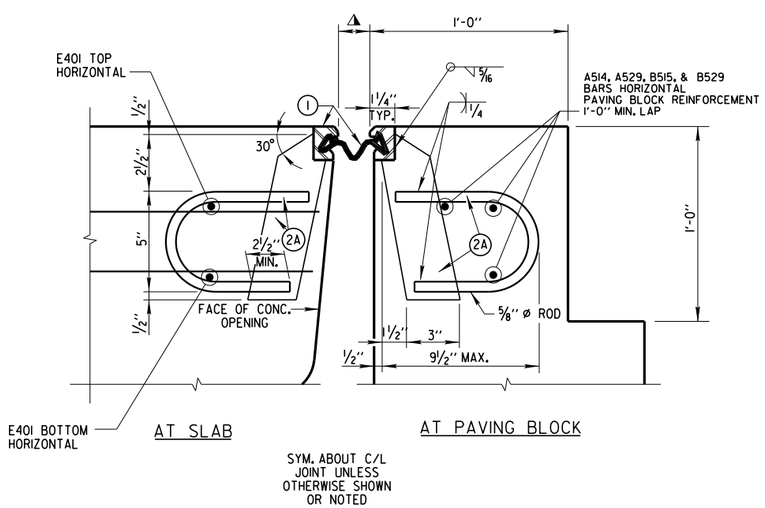

SECTION THRU ROADWAY JOINT

ROADWAY TRAFFIC AREA BETWEEN EXTERIOR GIRDERS

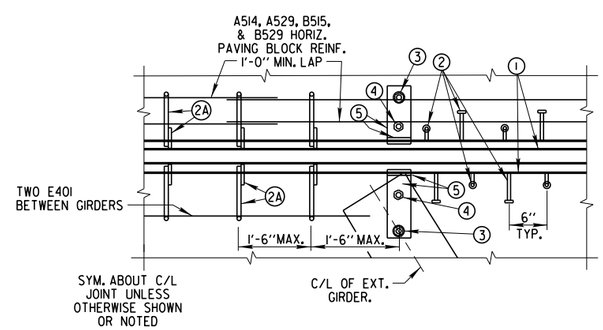

PARTIAL PLAN AT ROADWAY

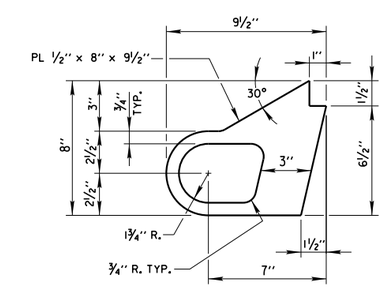

ALTERNATE STRIP SEAL ANCHOR

BILL OF BARS - EXPANSION JOINT

BAR MARK	COAT	NO. REQ'D.	LENGTH	BENT	BAR SERIES	LOCATION
E401	X	40	8'-0"			EXPANSION JOINT - BETWEEN GIRDERS

City of Milwaukee

Department of Public Works

Infrastructure Services Division

SOUTH 1ST STREET BRIDGE OVER THE KINNICKINNIC RIVER STRIP SEAL EXPANSION JOINTS

REVISIONS

DESIGNED BY J.D.T.

DRAWN BY K.P.S.

CHECKED BY J.J.K.

DATE 01/2014 | SCALE NONE

JOB NUMBER BR100-14-0104

SHEET NUMBER 22 OF 24

OF 36

W:\STR\B0204\PLANS\ 23_BEARING.DGN 01-02-2014

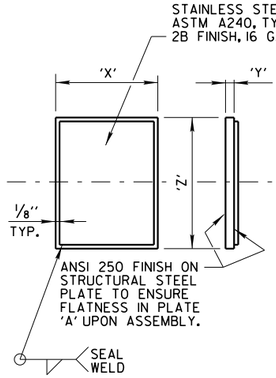

TOP PLATE "A"

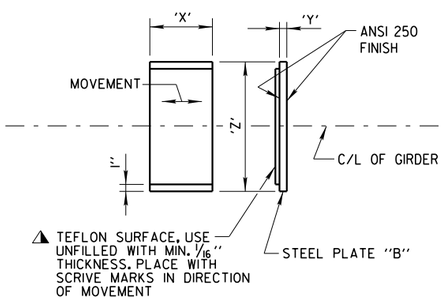

TEFLON SURFACE
ON PLATE "B"

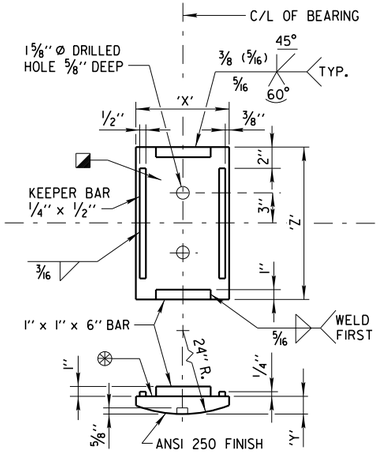

ROCKER PLATE "C"

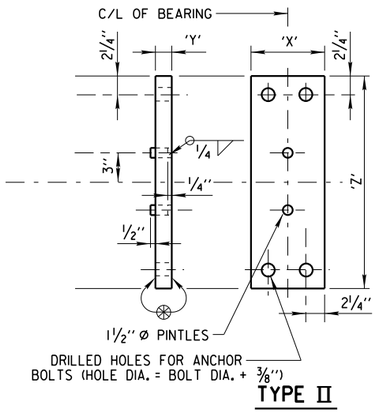

TYPE II

MASONRY PLATE "D"

EXPANSION BEARING

	TOTAL LOAD (KIPS)	PLATE "A"			PLATE "B"			PLATE "C"			PLATE "D"			HEIGHT (IN.)	NO. OF BRG'S REQ'D.	LOCATION
		'X'	'Y'	'Z'	'X'	'Y'	'Z'	'X'	'Y'	'Z'	'X'	'Y'	'Z'			
EXPANSION BEARING	210	11''	5/8''	1'-0''	7''	1/2''	1'-0''	9''	1 15/16 ''	1'-2 1/4''	8''	1 9/16''	1'-10''	4 7/8''	11	NORTH ABUTMENT
	210	11''	5/8''	1'-0''	7''	1/2''	1'-0''	9''	1 15/16 ''	1'-2 1/4''	8''	1 9/16''	1'-10''	4 7/8''	11	SOUTH ABUTMENT

ANCHOR BOLT NOTES

FOR SPAN LENGTHS GREATER THAN 150'-0'', USE A TYPE II MASONRY PLATE "D" WITH (4) - 1 1/2'' Ø x 2'-4'' LONG ANCHOR BOLTS.

DESIGNER NOTES

HEIGHT OF BEARINGS GIVEN IN TABLE INCLUDES 1/8'' BEARING PAD, 16 GAGE STAINLESS STEEL SHEET AND 1/16'' TEFLON SURFACE.

☆ TABLE OF FILLET WELD SIZES

MATERIAL THICKNESS OF THICKER PART JOINED.	‡ MIN. SIZE OF FILLET WELD
TO 1/2'' INCLUSIVE	3/16''
OVER 1/2'' TO 3/4''	1/4''
OVER 3/4'' TO 1 1/2''	△ 5/16''
OVER 1 1/2'' TO 2 1/4''	△ 3/8''

‡ EXCEPT THAT THE WELD SIZE SHALL NOT EXCEED THE THICKNESS OF THE THINNER PART JOINED.

△ MIN. PASS SIZE IS 5/16''

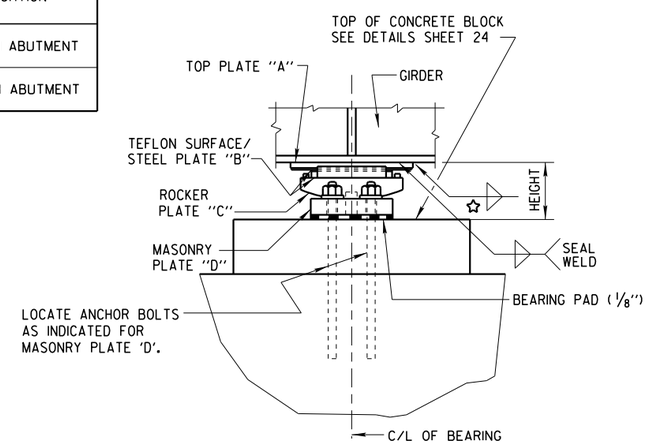

EXPANSION BEARING
ASSEMBLY

BEARING NOTES

ALL BEARINGS ARE SYMMETRICAL ABOUT C/L OF GIRDER AND C/L OF BEARING.

ALL STRUCTURAL STEEL BEARING PLATES SHALL BE FLAT ROLLED STEEL PLATES WITH ALL SURFACES SMOOTH AND FREE FROM WARP AND ALL EDGES SMOOTH, STRAIGHT AND VERTICAL.

ALL PLATE CUTS SHALL BE MACHINE OR MACHINE FLAME CUTS.

ALL FINISHED SURFACES SHALL BE MACHINE FINISHED BY AN AUTOMATIC PROCESS.

CHAMFER ANCHOR BOLTS PRIOR TO THREADING.

ANCHOR BOLTS SHALL BE THREADED 3''. PROVIDE ONE STANDARD WROUGHT WASHER AND ONE HEX NUT PER BOLT. PROJECT ANCHOR BOLTS, MASONRY PLATE "D" THICKNESS + 2 1/4'', ABOVE TOP OF CONCRETE.

CHAMFER TOP OF PINTLES 1/8''. DRILL HOLES FOR ALL PINTLES IN MASONRY PLATE "D" FOR A DRIVING FIT.

ALL MATERIAL IN BEARINGS, INCLUDING SHIM PLATES, BUT EXCLUDING ANCHOR BOLTS, STAINLESS STEEL SHEET, TEFLON SURFACE, PINTLES, NUTS AND WASHERS SHALL CONFORM TO ASTM A709 GRADE 50W.

STEEL PINTLES SHALL CONFORM TO ASTM A449 OR MATERIAL OF EQUIVALENT YIELD STRENGTH AND ELONGATION.

ANCHOR BOLTS, NUTS AND WASHERS SHALL CONFORM TO ASTM A709 GRADE 36, OR MATERIAL OF EQUIVALENT YIELD STRENGTH AND ELONGATION.

PROVIDE 1/8'' THICK BEARING PAD THE SAME SIZE AS MASONRY PLATE "D" FOR EACH BEARING.

ALL MATERIAL IN BEARINGS, INCLUDING SHIM PLATES AND BEARING PADS, SHALL BE PAID FOR AT THE UNIT PRICE BID FOR "BEARING ASSEMBLIES EXPANSION P-40-829", EACH.

ANCHOR BOLTS, NUTS AND WASHERS SHALL BE GALVANIZED IN ACCORDANCE WITH ASTM A153, CLASS C.

ROCKER PLATE "C" AND MASONRY PLATE "D" SHALL BE GALVANIZED. TOP PLATE "A" AND STEEL PLATE "B" SHALL BE SHOP PAINTED. USE A WELDABLE PRIMER ON TOP PLATE "A". DO NOT PAINT STAINLESS STEEL OR TEFLON SURFACES.

IN LIEU OF USING SHIM PLATES, FABRICATOR MAY INCREASE THICKNESS OF TOP PLATE "A" OR MASONRY PLATE "D" BY THE SHIM PLATE THICKNESS.

PLACE SHIM PLATES BETWEEN BEARING PAD AND MASONRY PLATE "D". PLATES SHALL HAVE 'X' AND 'Z' DIMENSIONS THAT MATCH MASONRY PLATE "D".

⊛ FINISH THESE SURFACES TO ANSI 250 IF 'Y' DIMENSION IS GREATER THAN 2''.

◪ PROVIDE A METHOD FOR HANDLING ROCKER PLATE "C" DURING GALVANIZING.

◭ BOND STEEL PLATE "B" AND TEFLON WITH ADHESIVE MATERIAL MEETING FEDERAL SPECIFICATION MMM-A-134, FEP FILM OR EQUAL.

DRILLED HOLES FOR ANCHOR BOLTS IN MASONRY PLATE "D" SHALL HAVE A DIAMETER 3/8'' LARGER THAN ANCHOR BOLT.

AT INSTALLATION, ENSURE STAINLESS STEEL SLIDING FACE OF THE UPPER ELEMENT AND THE TFE SLIDING FACE OF THE LOWER ELEMENT HAVE THE SURFACE FINISH SPECIFIED AND ARE CLEAN AND FREE OF ALL DUST, MOISTURE, OR ANY OTHER FOREIGN MATTER.

City of Milwaukee

Department of Public Works

Infrastructure Services Division

SOUTH 1ST STREET BRIDGE
OVER THE KINNICKINNIC RIVER
BEARING DETAILS

REVISIONS

DESIGNED BY J.J.K.
DRAWN BY K.P.S.
CHECKED BY J.D.T.
DATE 01/2014
SCALE NONE
JOB NUMBER BR100-14-0104
SHEET NUMBER 23 OF 24
OF 36

W:\STR\B0204\PLANS\ 24_BEARINGDET.DGN 01-02-2014

NOTE:

CUT EXISTING ANCHOR BOLTS OFF
2" BELOW TOP OF CONCRETE BLOCK.

CONCRETE BLOCK MATERIAL IS BID UNDER EACH ITEM:
502.0100 - CONCRETE MASONRY BRIDGES.
502.5005 - MASONRY ANCHORS TYPE L NO. 5.
505.0605 - BAR STEEL REINFORCEMENT HS COATED BRIDGES.

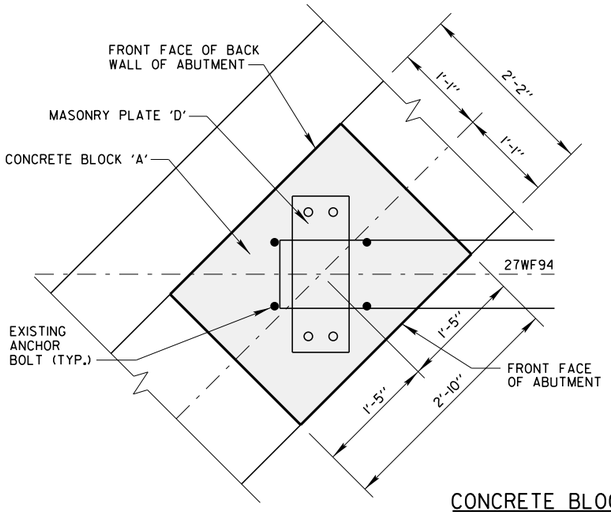

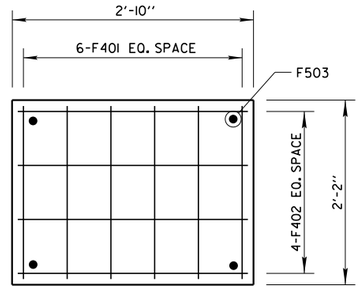

CONCRETE BLOCK 'A' PLAN VIEW

GIRDERS 2 TO 11 - SOUTH ABUTMENT
GIRDERS 1 TO 10 - NORTH ABUTMENT

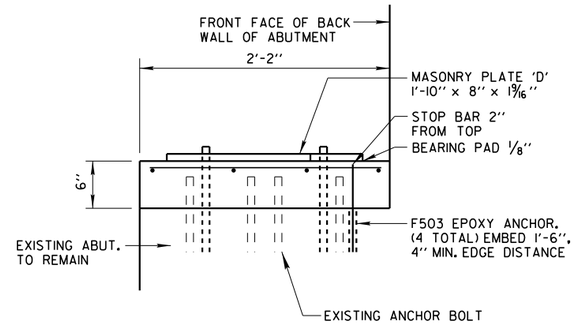

CONCRETE BLOCK 'A' DETAIL

(SIDE VIEW)

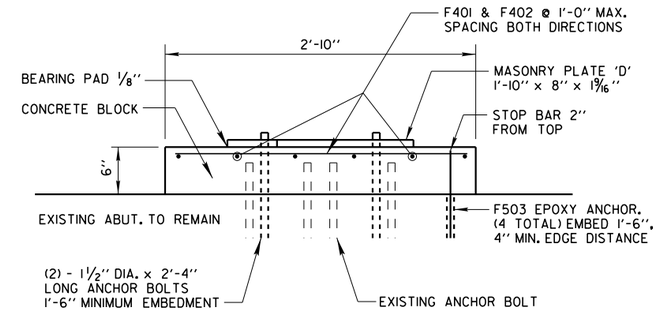

CONCRETE BLOCK 'A' DETAIL

(ELEVATION VIEW AT FRONT FACE)

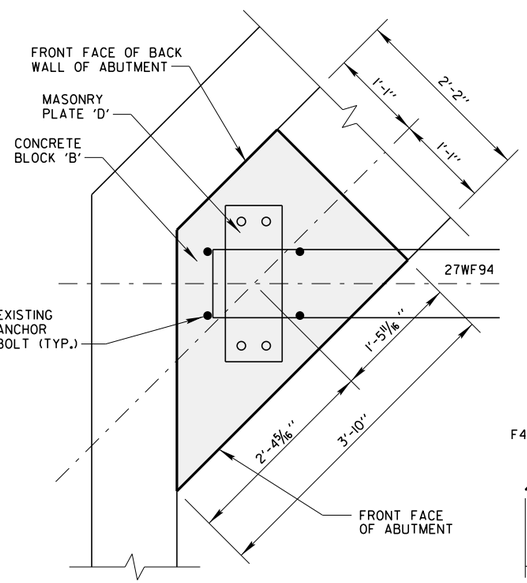

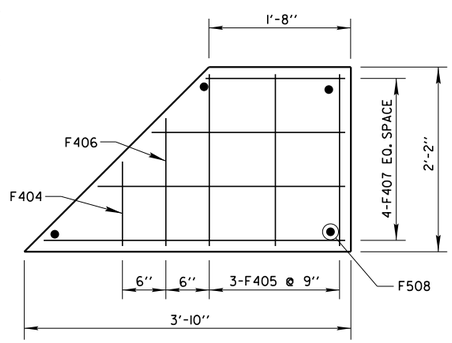

CONCRETE BLOCK 'B' PLAN VIEW

GIRDER 1 - SOUTH ABUTMENT
GIRDER 11 - NORTH ABUTMENT

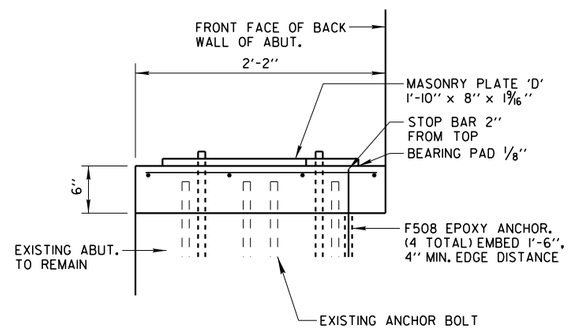

CONCRETE BLOCK 'B' DETAIL

(SIDE VIEW)

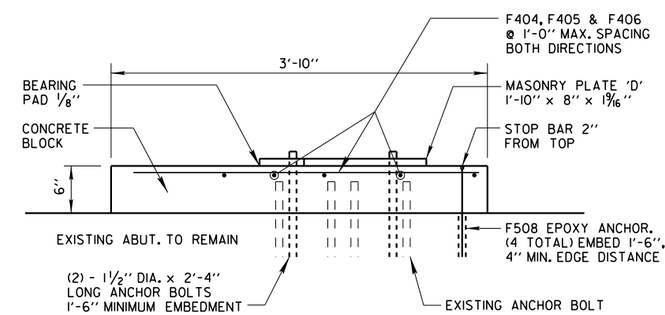

CONCRETE BLOCK 'B' DETAIL

(ELEVATION VIEW AT FRONT FACE)

BILL OF BARS - CONCRETE BLOCK

BAR MARK	COAT	NO. REQ'D.	LENGTH	BENT	BAR SERIES	LOCATION
F401	X	120	1'-10"			TYPE 'A' - TOP LONGITUDINAL
F402	X	80	2'-6"			TYPE 'A' - TOP TRANSVERSE
F503	X	80	1'-11"			TYPE 'A' - ANCHORS
F404	X	2	9"			TYPE 'B' - TOP LONGITUDINAL
F405	X	6	1'-10"			TYPE 'B' - TOP LONGITUDINAL
F406	X	2	1'-3"			TYPE 'B' - TOP LONGITUDINAL
F407	X	8	2'-4"		X	TYPE 'B' - TOP TRANSVERSE
F508	X	8	1'-11"			TYPE 'B' - ANCHORS

BAR SERIES TABLE

BAR MARK	NO. REQ'D.	LENGTH
F407	2 SERIES OF 4	1'-5" TO 3'-3"

BUNDLE AND TAG EACH SERIES SEPARATELY

City of Milwaukee

Department of Public Works

Infrastructure Services Division

SOUTH 1ST STREET BRIDGE
OVER THE KINNICKINNIC RIVER
CONCRETE BLOCK DETAILS

REVISIONS

DESIGNED BY J.D.T.
DRAWN BY K.P.S.
CHECKED BY J.J.K.
DATE 01/2014
SCALE NONE
JOB NUMBER BR100-14-0104
SHEET NUMBER 24 OF 24
OF 36