INDEX OF DRAWINGS

SHEET	DRAWING	DESCRIPTION
--	--	COVER SHEET
1	IND-01	INDEX OF DRAWINGS
2	GEN-01	SITE MAP
3	GEN-02	SYMBOLS AND ABBREVIATIONS
4	CM-01	STREET LIGHTING CONTROL NETWORK DIAGRAM
5	ER-01	REMOTE TELEMETRY UNIT RISER DIAGRAM
6	ES-01	FIRE HOUSE 34 SITE ELECTRICAL LAYOUT DRAWING
7	ES-02	T-26C SITE ELECTRICAL LAYOUT DRAWING
8	ES-03	T-30N SITE ELECTRICAL LAYOUT DRAWING
9	ES-04	T-45N SITE ELECTRICAL LAYOUT DRAWING
10	ES-05	WP SITE ELECTRICAL LAYOUT DRAWING
11	ES-06	NK SITE ELECTRICAL LAYOUT DRAWING
12	ES-07	T-22N SITE ELECTRICAL LAYOUT DRAWING
13	ES-08	T-38N SITE ELECTRICAL LAYOUT DRAWING
14	ES-09	T-42N SITE ELECTRICAL LAYOUT DRAWING
15	ES-10	T-44N SITE ELECTRICAL LAYOUT DRAWING
16	ES-11	T-28N SITE ELECTRICAL LAYOUT DRAWING
17	ES-12	T-32N SITE ELECTRICAL LAYOUT DRAWING
18	ED-01	ANTENNA INSTALLATION DETAIL LIGHT POLE MOUNT
19	ED-02	RTU WALL MOUNT INSTALLATION DETAIL
20	ED-03	RTU TRANSCLOSURE MOUNT INSTALLATION DETAIL
21	ED-04	RTU POLE MOUNT INSTALLATION DETAIL
22	ED-05	RTU VAULT INSTALLATION DETAIL
23	ED-06	CT AND VT INSTALLATION DETAILS
24	ED-07	ELECTRICAL DETAILS INSTALLATION DETAIL
25	ED-08	ANTENNA ROOFTOP INSTALLATION DETAIL
26	ED-09	RTU HUB SITE WALL MOUNT INSTALLATION DETAIL

NO.	BY	DATE	DESCRIPTION

REVISIONS

STREET LIGHTING MASTER CONTROL
SCADA SYSTEM
PHASE 3

INDEX OF DRAWINGS

Westin

WESTIN ENGINEERING, INC.
303 W. MADISON STREET, SUITE 1110
CHICAGO, IL 60606

CITY OF MILWAUKEE

DEPARTMENT OF PUBLIC WORKS

DRAWN BY:	J. JACKSON	SHEET NO.:	1 OF 26
CHECKED BY:	J. MIRABELLA	DRAWING NO.:	IND-01
APPROVED BY:	B. BIEHL		
DATE:	11/02/2012		
SCALE:		SIZE:	11"x17"
CONTRACT NO.:		PROJECT NO.:	7434

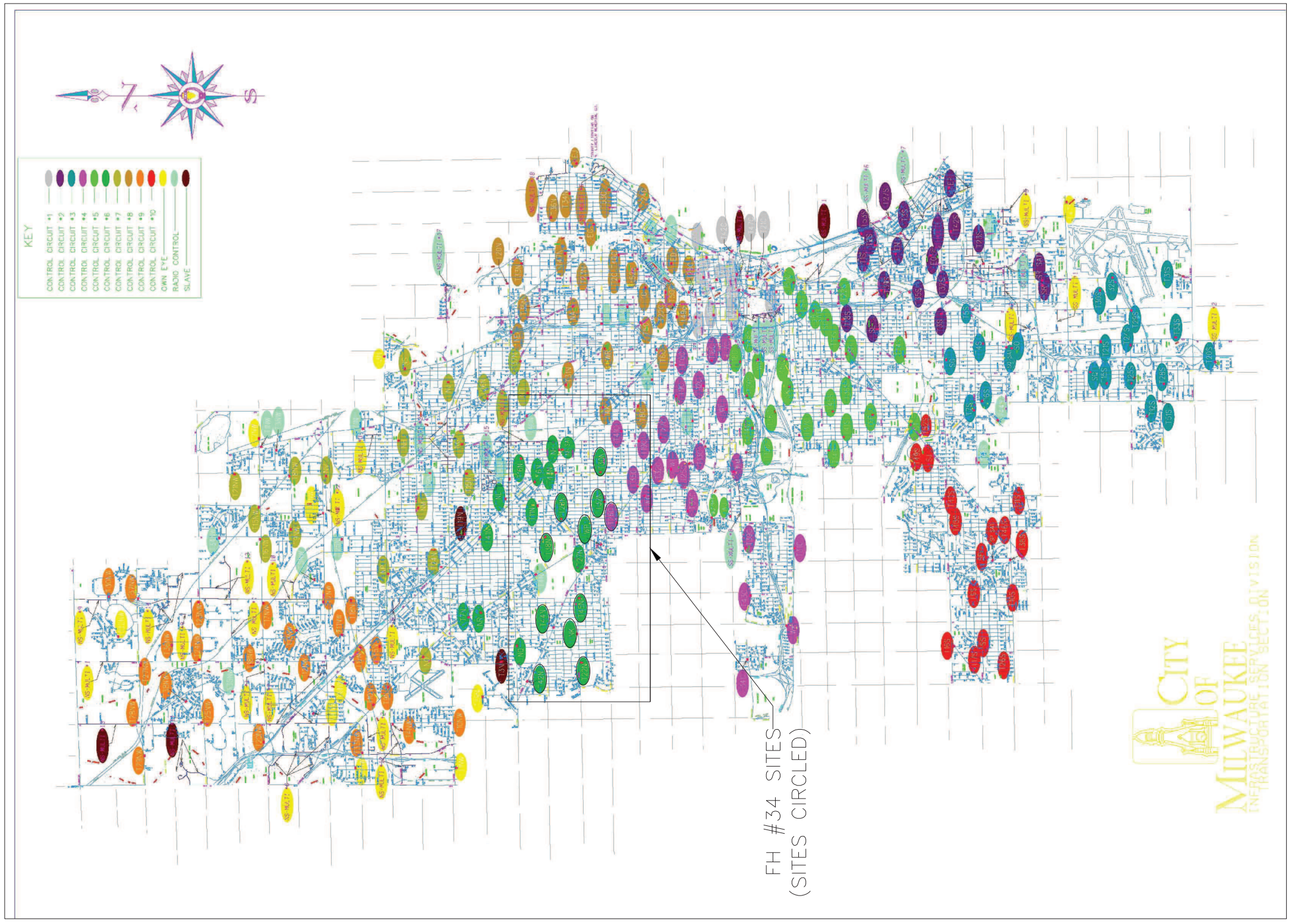

NO.	BY	DATE	DESCRIPTION

REVISIONS

STREET LIGHTING MASTER CONTROL
SCADA SYSTEM
PHASE 3

SITE MAP

Westin

WESTIN ENGINEERING, INC.
303 W. MADISON STREET, SUITE 1110
CHICAGO, IL 60606

CITY OF MILWAUKEE

DEPARTMENT OF PUBLIC WORKS

DRAWN BY:	J. JACKSON	SHEET NO.:	2 OF 26
CHECKED BY:	J. MIRABELLA	DRAWING NO.:	GEN-01
APPROVED BY:	B. BIEHL		
DATE:	11/02/2012		
SCALE:		SIZE:	11"x17"
CONTRACT NO.:		PROJECT NO.:	7434

ELECTRICAL SYMBOLS

ANTENNA

OMNI-DIRECTIONAL ANTENNA

YAGI ANTENNA

REMOTE SITE PLC (MICROLOGIX)

MASTER PLC (SLC 500)

E-NET SWITCH 10/100 MBPS

VOLTAGE TRANSDUCERS

CURRENT TRANSDUCERS

INTRUSION SWITCH

HIGH LEVEL SWITCH

EXISTING OIL SWITCH

FLEXIBLE METAL LIQUID-TIGHT CONDUIT, $\frac{3}{4}$" MIN. OR LARGER, SIZE TO MATCH CONDUIT, UNO

REMOVAL AND REPLACEMENT OF PAVEMENTS, SIDEWALK, AND/OR GRASS AREAS TO MATCH EXISTING AS SHOWN ON PICTURES

ABBREVIATIONS

AIO	ANALOG INPUT/OUTPUT
AMP	AMPERES
ANT	ANTENNA
CA.	CABLE
CB	CIRCUIT BREAKER
COMB	SEWER AND STORM COMBINATION
C.	CONDUIT
CT	CURRENT TRANSDUCER
DIO	DIGITAL INPUT/OUTPUT
FD	FIRE DEPARTMENT
FMC	FLEXIBLE METAL LIQUID TIGHT CONDUIT
GRD	EARTH GROUND
GRS	GALVANIZED RIGID STEEL CONDUIT
LCP	LOCAL CONTROL PANEL
LS	LIMIT SWITCH
LTC	LIQUID TIGHT CONDUIT
LTG	LIGHTING
NC	NORMALLY CLOSED CONTACTS
PDB	POWER DISTRIBUTION BLOCK
PWR	INCOMING POWER
RGD	RIGID
RTU	REMOTE TELEMETRY UNIT
SCH	SCHEDULE
SGNL	SIGNAL
SS	STAINLESS STEEL
TRANS	TRANSFORMER
UNO	UNLESS NOTED OTHERWISE
VAC	AC VOLTAGE
VDC	DC VOLTAGE
VT	VOLTAGE TRANSDUCER
WM	WATER MAIN

MISCELLANEOUS

1 / ES-46 — DETAIL IDENTIFICATION; DETAIL NOMENCLATURE; SHEET NUMBER ON WHICH DETAIL IS SHOWN

1 / ES-46 — SECTION OR ELEVATION

SEWER

MANHOLE

GENERAL NOTES:

1. GRS CONDUIT SHALL BE PROVIDED TO NEW INTRUSION LIMIT SWITCHES AND THE EXISTING OIL SWITCH LOCATED INSIDE OF TRANSCLOSURES
2. GRS CONDUIT SHALL BE PROVIDED INSIDE THE EXISTING POLE MOUNTED LIGHTING CONTROLLERS
3. NEW CT/VT CABINETS SHALL BE PAINTED TO MATCH THE EXISTING LIGHTING CONTROL ENCLOSURE IT IS BEING MOUNTED ON.
4. NEW RTU ENCLOSURES SHALL BE PAINTED TO MATCH THE EXISTING LIGHTING CONTROL ENCLOSURE IT IS BEING MOUNTED ON.
5. GRS CONDUIT SHALL BE ATTACHED TO POLE OR TRANSCLOSURE USING SS HARDWARE. PROVIDE GRS TO PVC ADAPTER AT EACH GRS CONDUIT TO PVC CONDUIT TRANSITION.
6. CONTRACTOR SHALL RESTORE AREAS TO ITS ORIGINAL CONDITION. THE CONTRACTOR SHALL REPLACE CONCRETE SIDEWALKS AND GRASS TO MATCH EXISTING IN DISTURBED AREAS.
7. REMOVE EXISTING LCP AFTER THE INSTALLATION, 14 DAY TEST PERIOD AND APPROVAL OF THE NEW RTU. LCP REMOVAL SHALL INCLUDE, BUT NOT LIMITED TO; LCP, CONTROL CONDUIT AND CABLE TO OIL SWITCH, 24 VDC PULSE WIRE BACK TO SOURCE, AND 120 VAC POWER CONDUIT AND CABLE.
8. CONTRACTOR SHALL DIRECTIONAL BORE THE NEW PVC CONDUIT ROUTED UNDER ROADWAY. CONTRACTOR SHALL COORDINATE ALL UNDERGROUND UTILITIES AND LOCATE CONDUIT RUNS TO AVOID INTERFERENCES.
9. THE LOCATIONS OF THE CT'S AND VT'S SHALL BE DETERMINED IN THE FIELD AT THE TIME OF THE INSTALLATION. THE EXACT LOCATION SHALL BE APPROVED BY THE CITY AND COORDINATED WITH THE CITY STREET LIGHTING ELECTRICIANS.
10. CONDUIT RUNS SHALL BE ROUTED AS FAR AWAY FROM HIGH VOLTAGE BUSSES AS POSSIBLE. CONTRACTOR SHALL NOTIFY CITY PERSONNEL 14 DAYS PRIOR TO WORK FOR THE CITY TO DE-ENERGIZE BUSSES. CONTRACTOR SHALL BE RESPONSIBLE FOR SCHEDULING WORK SO THAT THE BUSS IS RE-ENERGIZED BEFORE NIGHT TIME ACTIVATION.
11. WIRE ALL INTRUSION LIMIT SWITCHES IN SERIES. SWITCHES SHALL BE NC. THE ALARM TRIPS WHEN THE LIMIT SWITCH CONTACT OPENS IF ANY DOOR OPENS.
12. CONTRACTOR SHALL COORDINATE THE NEW LOCATION OF THE PHOTO-CELL WITH CITY PERSONNEL. THE CONTRACTOR SHALL BE RESPONSIBLE FOR MOVING THE PHOTO-CELL AND ASSOCIATED EQUIPMENT TO THE COORDINATED LOCATION.
13. CONTRACTOR SHALL COORDINATE THE NEW LOCATION OF THE RADIO EQUIPMENT WITH CITY PERSONNEL. THE CONTRACTOR SHALL BE RESPONSIBLE FOR MOVING THE RADIO AND ASSOCIATED EQUIPMENT TO THE COORDINATED LOCATION.
14. CONTRACTOR SHALL SPLIT-SLIT (HOG) UNDERGROUND CONDUIT THROUGH GRASSY AREAS WHERE POSSIBLE.
15. ALL UNDERGROUND CONDUITS ROUTED PARALLEL TO ROADWAY SHALL BE SET BACK AT LEAST 4 FEET FROM FACE OF CURB.

GENERAL NOTES CONTINUED:

16. ALL CIRCUIT BREAKERS AND CIRCUIT BREAKER PANELS OUTSIDE OF THE RTU ENCLOSURES SHALL BE FURNISHED BY THE OWNER.
17. TRANCLOSURE HOA SWITCHES SHALL BE INSTALLED INSIDE THE TRANSCLOSURE. VAULT HOA SWITCHES SHALL BE INSTALLED ON THE RTU INSIDE THE VAULT.
18. CONTRACTOR SHALL REQUEST A WRITTEN APPROVAL TO USE LIQUID-TIGHT TYPE CONDUIT ON THIS PROJECT. REQUEST TO INCLUDE SIZE, LENGTH, AND LOCATION OF EACH LOCATION.
19. CONTRACTOR SHALL REPLACE EXISTING SLC 5/05 CPU'S AT FH#10 & FH#28 WITH A SLC 5/05 64KB CPU.

NO.	BY	DATE	DESCRIPTION

REVISIONS

STREET LIGHTING MASTER CONTROL
SCADA SYSTEM
PHASE 3

LEGEND AND SYMBOLS

Westin

WESTIN ENGINEERING, INC.
303 W. MADISON STREET, SUITE 1110
CHICAGO, IL 60606

CITY OF MILWAUKEE

DEPARTMENT OF PUBLIC WORKS

DRAWN BY:	J. JACKSON	SHEET NO.:	3 OF 26
CHECKED BY:	J. MIRABELLA	DRAWING NO.:	GEN-02
APPROVED BY:	B. BIEHL		
DATE:	11/02/2012		
SCALE:		SIZE:	11"x17"
CONTRACT NO.:		PROJECT NO.:	7434

SCADA CONTROL CENTER – FIELD OPERATIONS CENTER – 1540 CANAL STREET

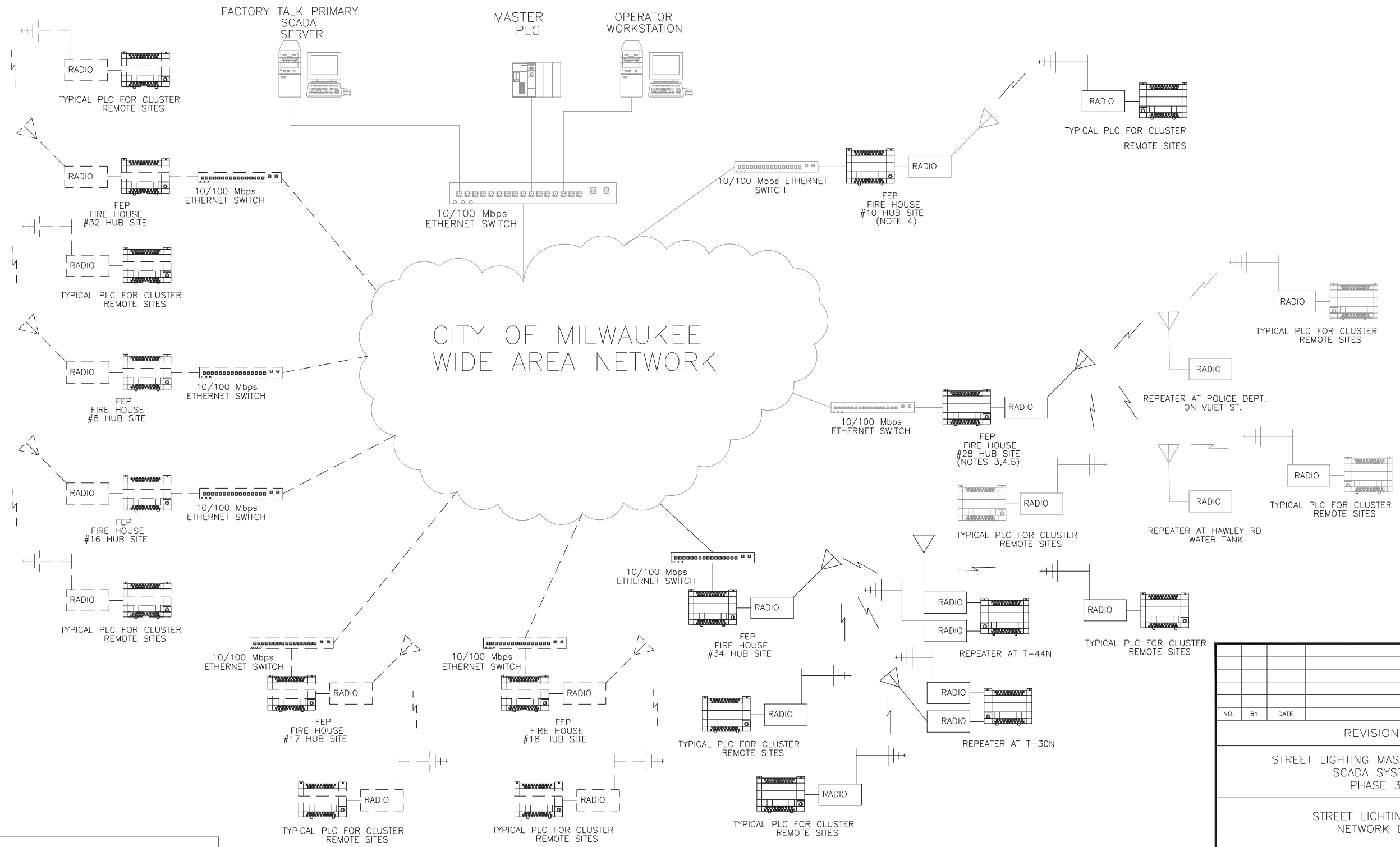

GENERAL NOTES:

1. ALL ETHERNET SWITCHES ARE PROVIDED BY THE CITY.
2. ALL EQUIPMENT IN BOLD SHALL BE PROVIDED UNDER THIS CONTRACT.
3. EQUIPMENT SHOWN HALF-TONE, EQUIPMENT AT FIREHOUSE #28, IS EXISTING. ALL OTHER EQUIPMENT THAT IS SHOWN DASHED ON THIS DRAWING IS FUTURE.
4. REPLACE EXISTING SLC 5/05 CPU WITH SLC 5/05 64KB CPU. PROVIDE SOFTWARE PROGRAMMING OF CPU.
5. REPLACE EXISTING ANTENNA WITH A HIGHER GAIN ANTENNA, ANDREW MODEL NO. DB589Y.

LEGEND

————	EXISTING EQUIPMENT
— — — —	FUTURE EQUIPMENT
————	NEW EQUIPMENT

NO.	BY	DATE	DESCRIPTION

REVISIONS

STREET LIGHTING MASTER CONTROL SCADA SYSTEM PHASE 3

STREET LIGHTING CONTROL NETWORK DIAGRAM

Westin

WESTIN ENGINEERING, INC.
303 W. MADISON STREET, SUITE 1110
CHICAGO, IL 60606

CITY OF MILWAUKEE

DEPARTMENT OF PUBLIC WORKS

DRAWN BY:	J. JACKSON	SHEET NO.: 4 OF 26	
CHECKED BY:	J. MIRABELLA	DRAWING NO.: CM-01	
APPROVED BY:	B. BIEHL		
DATE:	11/02/2012		
SCALE:		SIZE:	11"x17"
CONTRACT NO.:		PROJECT NO.:	7434

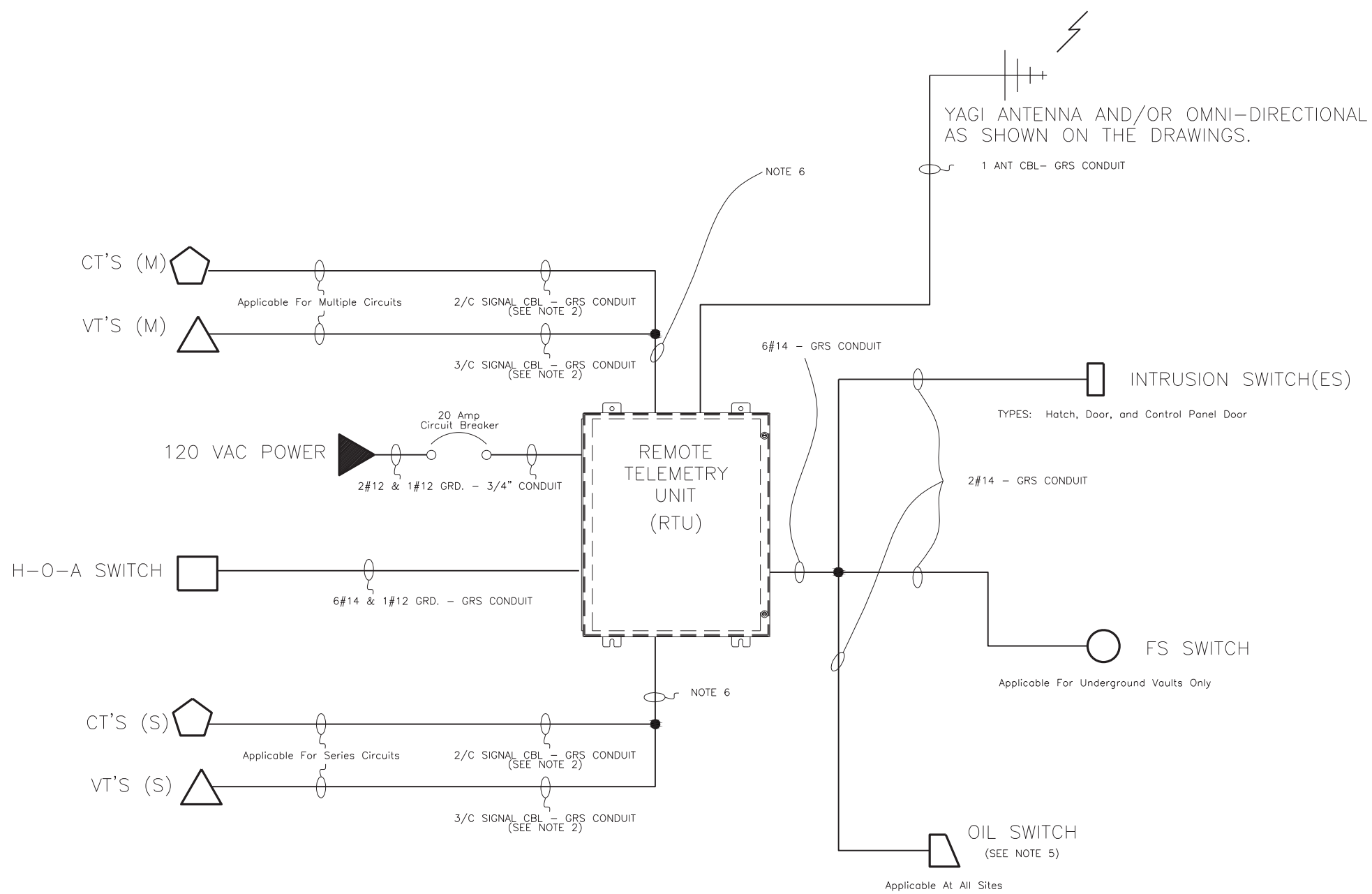

REMOTE TELEMETRY UNIT (RTU) - RISER DIAGRAM

DEVICE TYPE	DESCRIPTION	SIGNAL TYPE	TYPICAL SITE TYPE
CT'S (M)	MULTI-CIRCUIT CURRENT TRANSDUCERS	ANALOG INPUT: 0-60 AMP, 4-20 mA	N/A
VT'S (M)	MULTI-CIRCUIT VOLTAGE TRANSDUCERS	ANALOG INPUT: 0-480 VAC, 4-20 mA	N/A
CT'S (S)	SERIES-CIRCUIT CURRENT TRANSDUCERS	ANALOG INPUT: 0-6.6 AMP, 4-20 mA	N/A
VT'S (S)	SERIES-CIRCUIT VOLTAGE TRANSDUCERS	ANALOG INPUT: 0-2300 VAC, 4-20 mA	N/A
120 VAC POWER	INPUT POWER TO CONTROL PANEL	120 VAC FROM MAIN BREAKER	ALL
LCP	LOCAL CONTROL PANEL	DIGITAL OUTPUT: 24 VDC	ALL
FS SWITCH	HIGH LEVEL FLOAT SWITCH	DIGITAL INPUT: 24 VDC	UNDERGROUND VAULTS
INTRUSION SWITCH(S)	INTRUSION SWITCH(ES)	DIGITAL INPUT: 24 VDC	ALL
ANTENNA	RADIO ANTENNA	N/A	ALL

NOTES:

1. THE DIAGRAM ON THIS SHEET DEPICTS THE TYPICAL CONFIGURATION OF THE REMOTE TELEMETRY (RTU) AND ASSOCIATED DEVICES. SPECIFIC REQUIREMENTS VARY PER SITE. REFER TO INDIVIDUAL ELECTRICAL SHEETS FOR EACH SITE SPECIFIC REQUIREMENTS.
2. QUANTITY OF CABLE SHALL BE PROVIDED PER INDIVIDUAL SITE REQUIREMENTS.
3. INSTALL NEW CIRCUIT BREAKER IN EXISTING OR NEW CIRCUIT BREAKER BOX SEE ACTUAL REQUIREMENTS AS INDICATED AT EACH INDIVIDUAL SITE DRAWINGS.
4. THE CABLE AND CONDUIT ITEMS AND QUANTITIES SHOWN FOR EACH SITE INDICATE THE APPROXIMATE LENGTHS REQUIRED FROM THE PANEL TO ASSOCIATED DEVICES. THE CONTRACTOR SHALL BE RESPONSIBLE FOR ALL WIRING AND TERMINATIONS WITHIN PANELS AND AT DEVICES. PROVIDE PANEL RACEWAY AND CABLE SYSTEMS AS REQUIRED BY NATIONAL ELECTRICAL CODE AND LOCAL CODES.
5. OIL SWITCH - EXISTING AT ALL SITES
   CONTRACTOR SHALL PROVIDE NEW CONTROL CONDUIT AND WIRING FROM THE NEW RTU TO THE EXISTING OIL SWITCH. THE WIRES FROM THE RTU ORIGINATE AT DRY CONTACTS IN THE RTU PANEL. ONE SIDE OF THE CONTACTS SHALL BE CONNECTED TO 120 VAC (BLACK WIRE), THE OTHER SIDE SHALL BE CONNECTED TO THE OIL SWITCH (RED WIRE).
6. SIZE CONDUIT AS REQUIRED FOR QUANTITY OF CABLES PROVIDED TO DEVICES.

NO.	BY	DATE	DESCRIPTION

REVISIONS

STREET LIGHTING MASTER CONTROL
SCADA SYSTEM
PHASE 3

REMOTE TELEMETRY UNIT
RISER DIAGRAM

Westin

WESTIN ENGINEERING, INC.
303 W. MADISON STREET, SUITE 1110
CHICAGO, IL 60606

CITY OF MILWAUKEE

DEPARTMENT OF PUBLIC WORKS

DRAWN BY:	J. JACKSON	SHEET NO.:	5 OF 26
CHECKED BY:	J. MIRABELLA	DRAWING NO.:	ER-01
APPROVED BY:	B. BIEHL		
DATE:	11/02/2012		
SCALE:		SIZE:	11"x17"
CONTRACT NO.:		PROJECT NO.:	7434

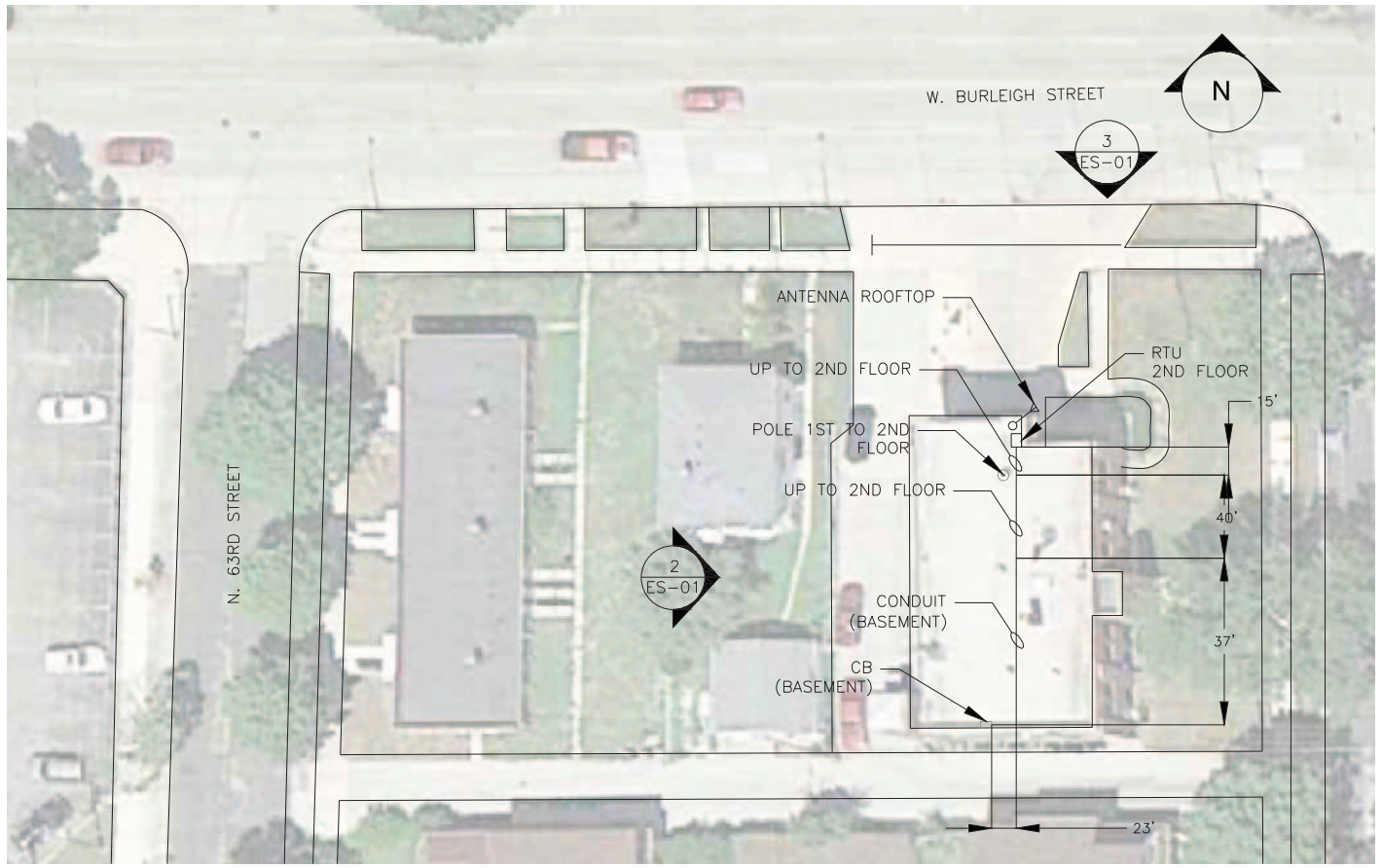

1 ES-01 FH34 SITE PLAN
NTS

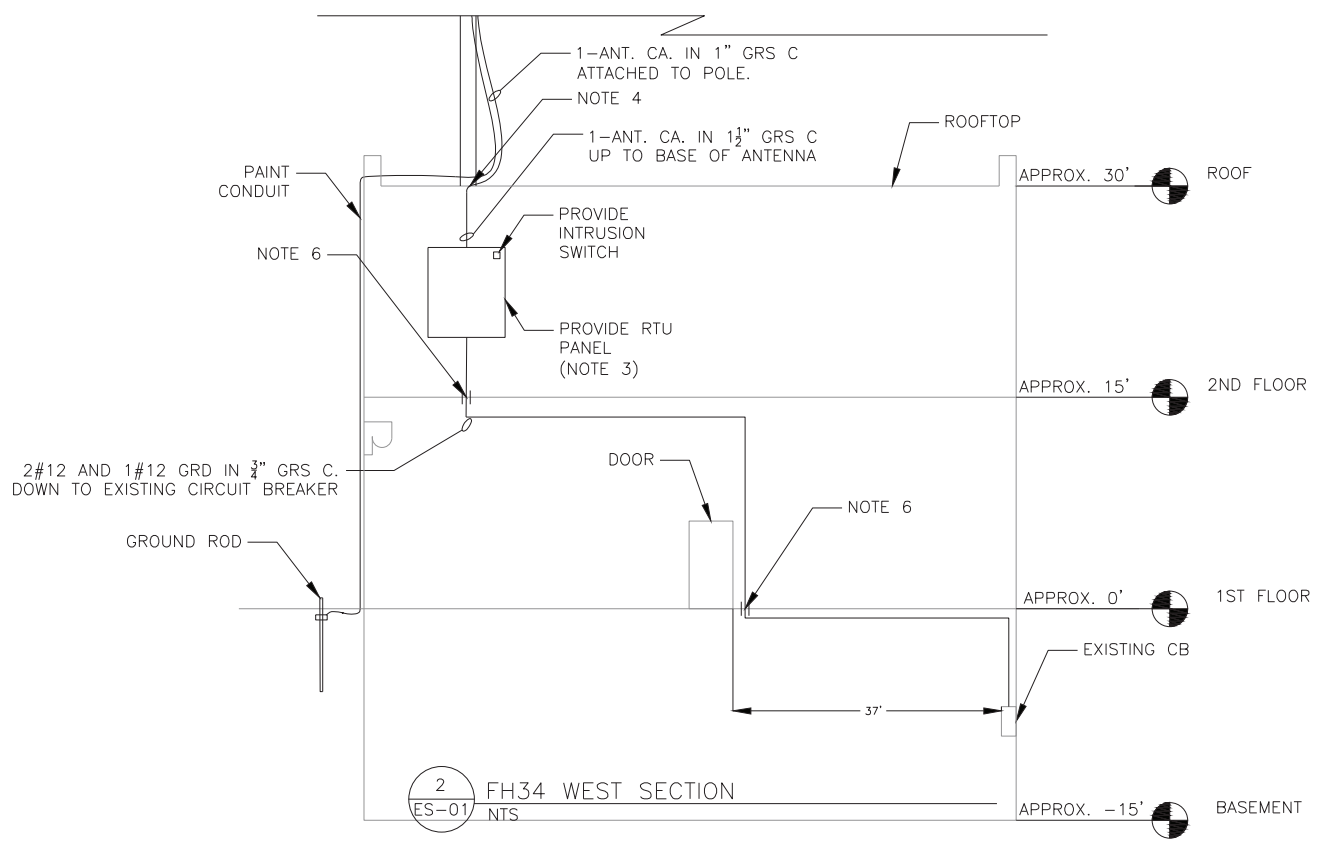

2 ES-01 FH34 WEST SECTION
NTS

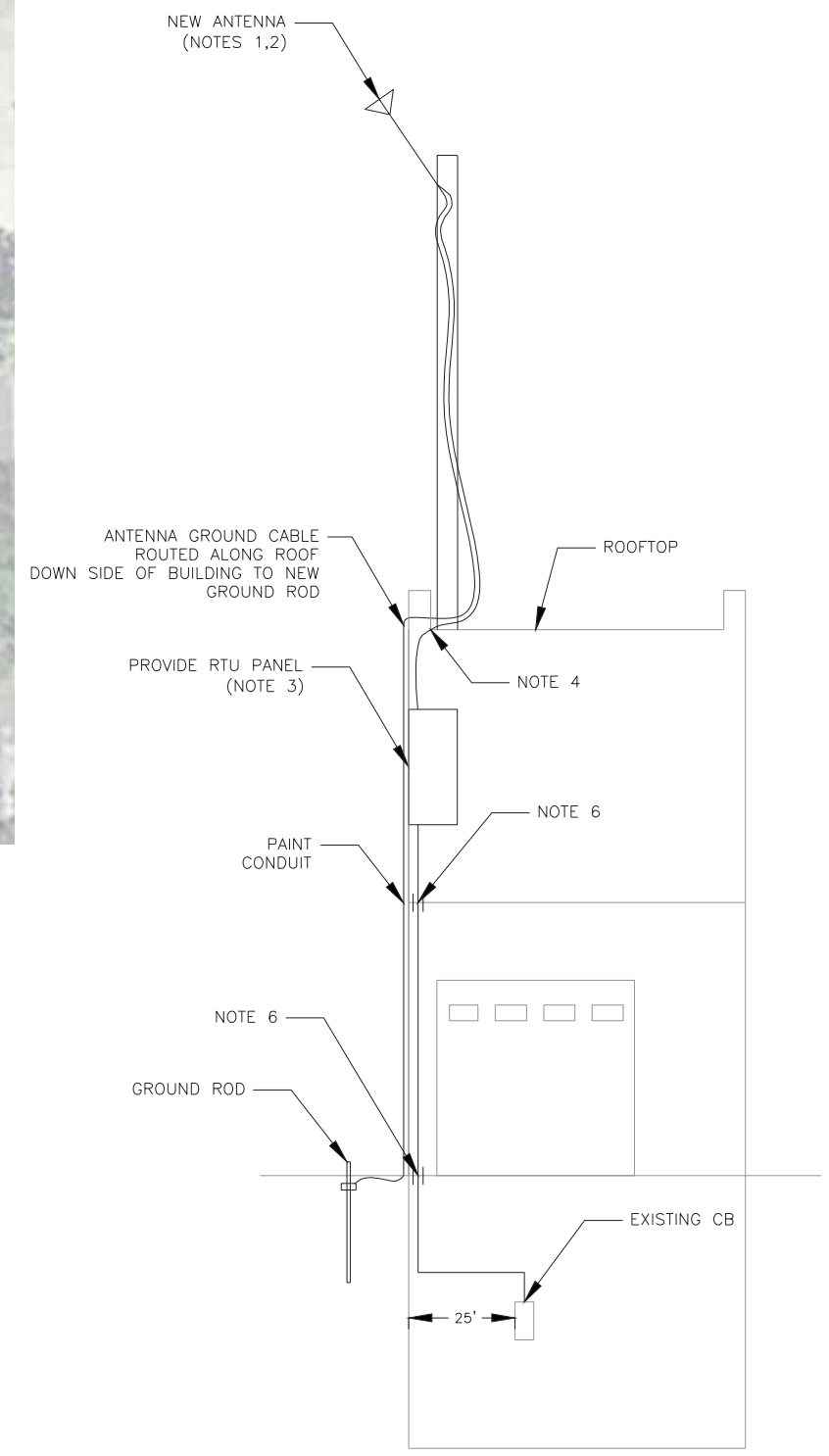

3 ES-01 FH34 SECTION NORTH ELEVATION
NTS

NOTES:

1. MOUNT NEW ANTENNA ON ROOF OF FIREHOUSE 34. ANTENNA SHOULD BE MOUNTED AT A MINIMUM OF 8' ABOVE THE BASE OF POLE.
2. REFER TO DRAWING ED-08 FOR ANTENNA MOUNTING DETAIL.
3. REFER TO DRAWING ED-09 FOR WALL MOUNT INSTALLATION DETAIL.
4. PROVIDE WATER-TIGHT ROOF PENETRATION.
5. PROVIDE 20A-1P CIRCUIT BREAKER TO MATCH EXISTING IN EXISTING PANEL SPACE.
6. CORE FOR GROUND PENETRATION FIRE SEAL OPENING.

NO.	BY	DATE	DESCRIPTION

REVISIONS

STREET LIGHTING MASTER CONTROL
SCADA SYSTEM
PHASE 3

FIRE HOUSE 34
ELECTRICAL LAYOUT DRAWING

Westin

WESTIN ENGINEERING, INC.
303 W. MADISON STREET, SUITE 1110
CHICAGO, IL 60606

CITY OF MILWAUKEE

DEPARTMENT OF PUBLIC WORKS

DRAWN BY:	J. JACKSON	SHEET NO.:	06 OF 26
CHECKED BY:	J. MIRABELLA	DRAWING NO.:	ES-01
APPROVED BY:	B. BIEHL		
DATE:	11/02/2012		
SCALE:		SIZE:	11"x17"
CONTRACT NO.:		PROJECT NO.:	7434

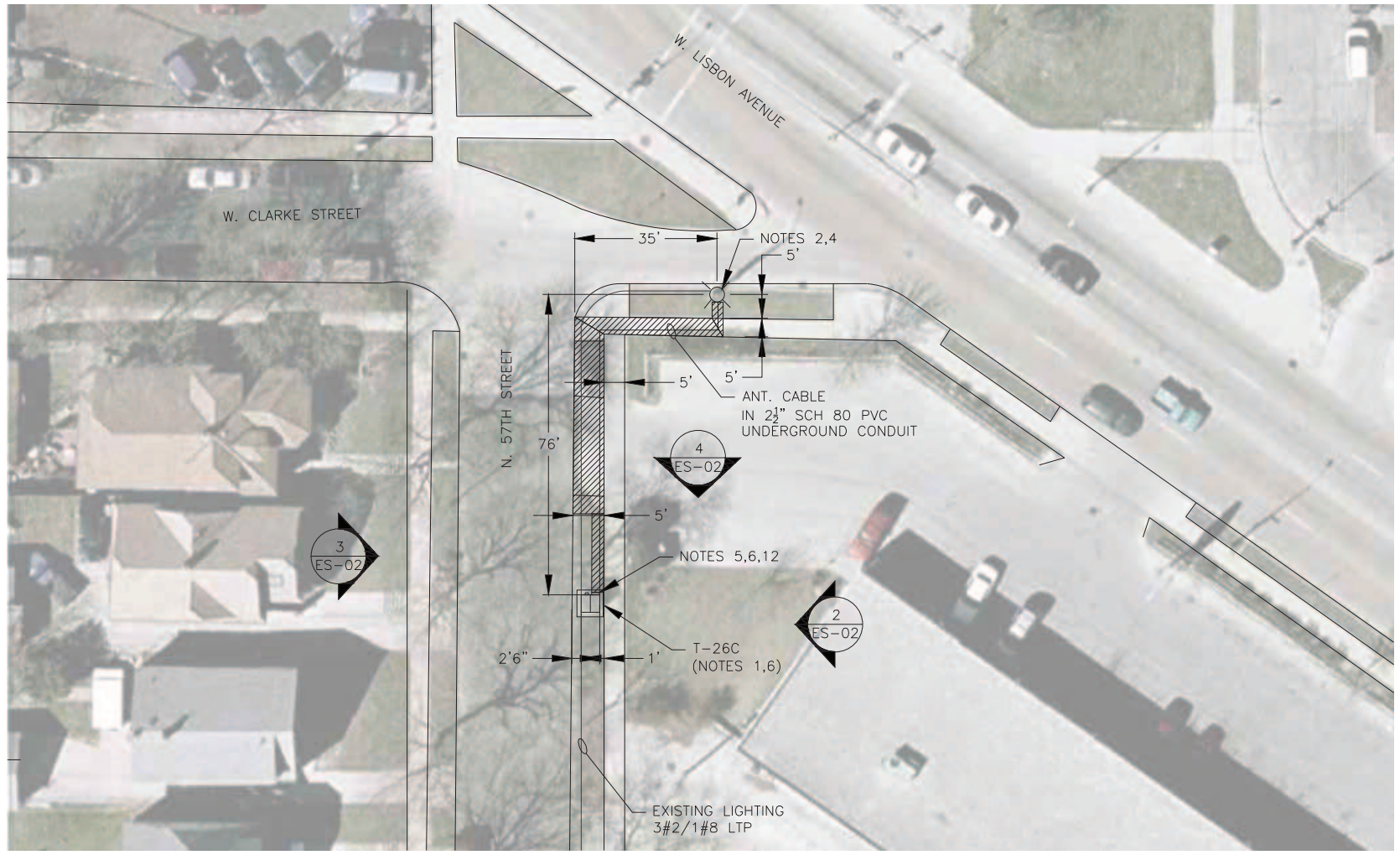

1 ES-02 T-26C SITE PLAN
NTS

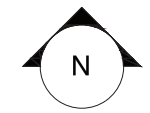

NOTES:

1. EXISTING DOUBLE-SIDED DUAL DOOR TRANSCLOSURE MOUNTED ON CONCRETE PAD.
2. MOUNT NEW ANTENNA ON EXISTING 26' CONCRETE LIGHT POLE.
3. REFER TO DRAWING ED-03 FOR INSTALLATION DETAILS.
4. REFER TO DRAWING ED-01 FOR ANTENNA MOUNTING DETAIL.
5. REFER TO DRAWING ED-07 FOR CONDUIT DETAIL.
6. HATCH AREA INDICATE AREAS TO REMOVE AND REPLACE PAVEMENT, SIDEWALK, AND/OR GRASS AREAS BACK TO ORIGINAL CONDITION.
7. T-26C HAS TEN MULTIPLE CIRCUITS IN SERVICE AND ONE MAIN FEED. PROVIDE ONE CT FOR EACH CIRCUIT AND ONE VT FOR THE MAIN FEED.
8. REFER TO DRAWING ED-06 FOR CT/VT MOUNTING DETAILS.
9. PROVIDE CORE THROUGH EXISTING CONCRETE PAD AS CLOSE AS POSSIBLE TO ENCLOSURE FACE. ROUTE RACEWAY ADJACENT TO ENCLOSURE STRAIGHT THRU CORED HOLE. PROVIDE CAULK SEAL IN CONCRETE GAP.
10. REMOVE EXISTING CABLE(S) FROM TRANSFORMER TO DISCONNECTS AND REPLACE WITH NEW 3/0 AWG CABLE FROM TRANSFORMER TO PDB WITH NEW 6 AWG CABLES FROM DISCONNECTS TO PDB LOCATED IN NEW CT/VT PANEL.
11. PROVIDE 2-#12 AWG TAPPED TO PDB IN NEW CT/VT PANEL AND CONNECT TO VT MOUNTED IN NEW CT/VT PANEL.
12. EXISTING LIGHTING CIRCUITS LOCATED UNDERGROUND IN CROSS HATCH.
13. REFERENCE LATEST AVAILABLE UNDERGROUND DRAWINGS. CONTRACTOR TO IDENTIFY ALL UNDERGROUND UTILITIES PRIOR TO WORK ON THIS DRAWING.

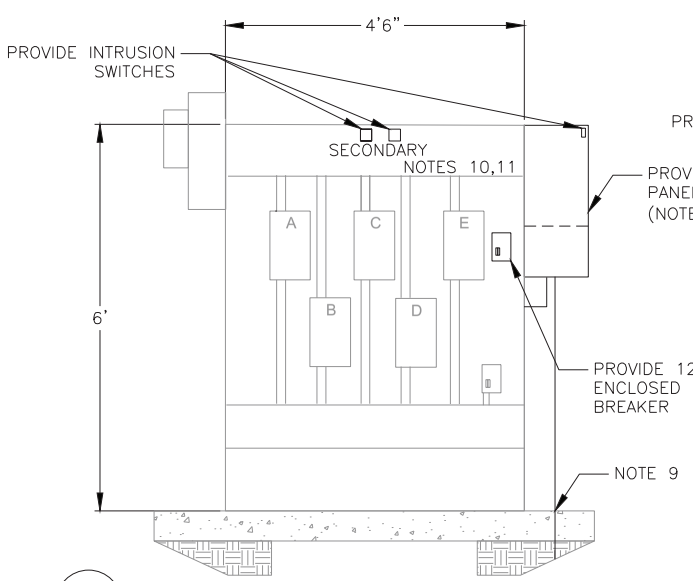

2 ES-02 EXISTING TRANSCLOSURE EAST ELEVATION
NTS

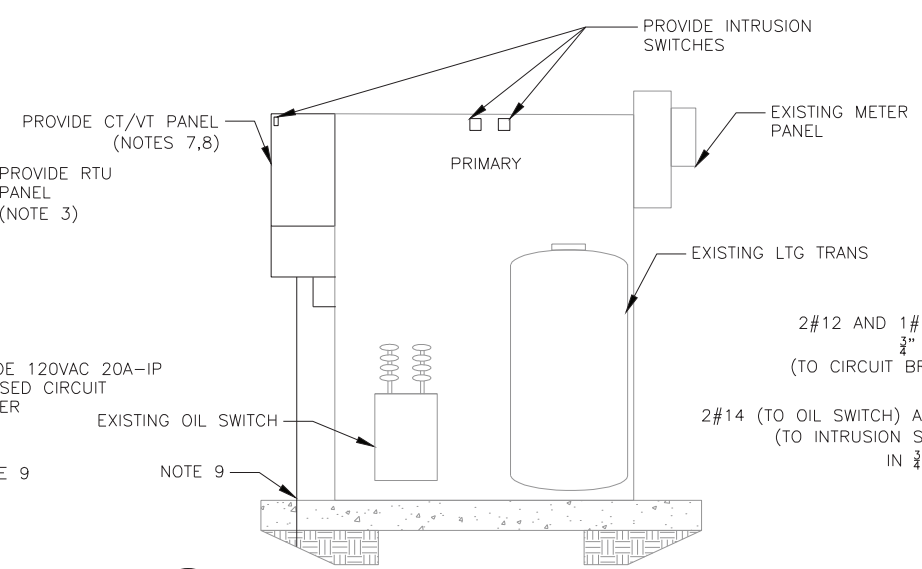

3 ES-02 EXISTING TRANSCLOSURE WEST ELEVATION
NTS

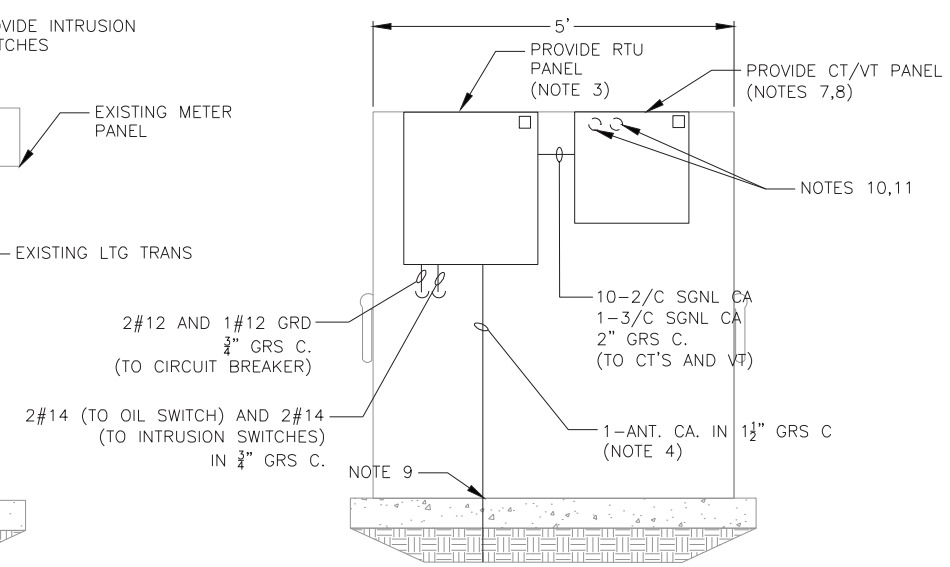

4 ES-02 EXISTING TRANSCLOSURE NORTH ELEVATION
NTS

NO.	BY	DATE	DESCRIPTION

REVISIONS

STREET LIGHTING MASTER CONTROL
SCADA SYSTEM
PHASE 3

T-26C SITE
ELECTRICAL LAYOUT DRAWING

Westin
WESTIN ENGINEERING, INC.
303 W. MADISON STREET, SUITE 1110
CHICAGO, IL 60606

CITY OF MILWAUKEE

DEPARTMENT OF PUBLIC WORKS

DRAWN BY:	J. JACKSON	SHEET NO.:	07 OF 26
CHECKED BY:	J. MIRABELLA	DRAWING NO.:	ES-02
APPROVED BY:	B. BIEHL		
DATE:	11/02/2012		
SCALE:		SIZE:	11"x17"
CONTRACT NO.:		PROJECT NO.:	7434

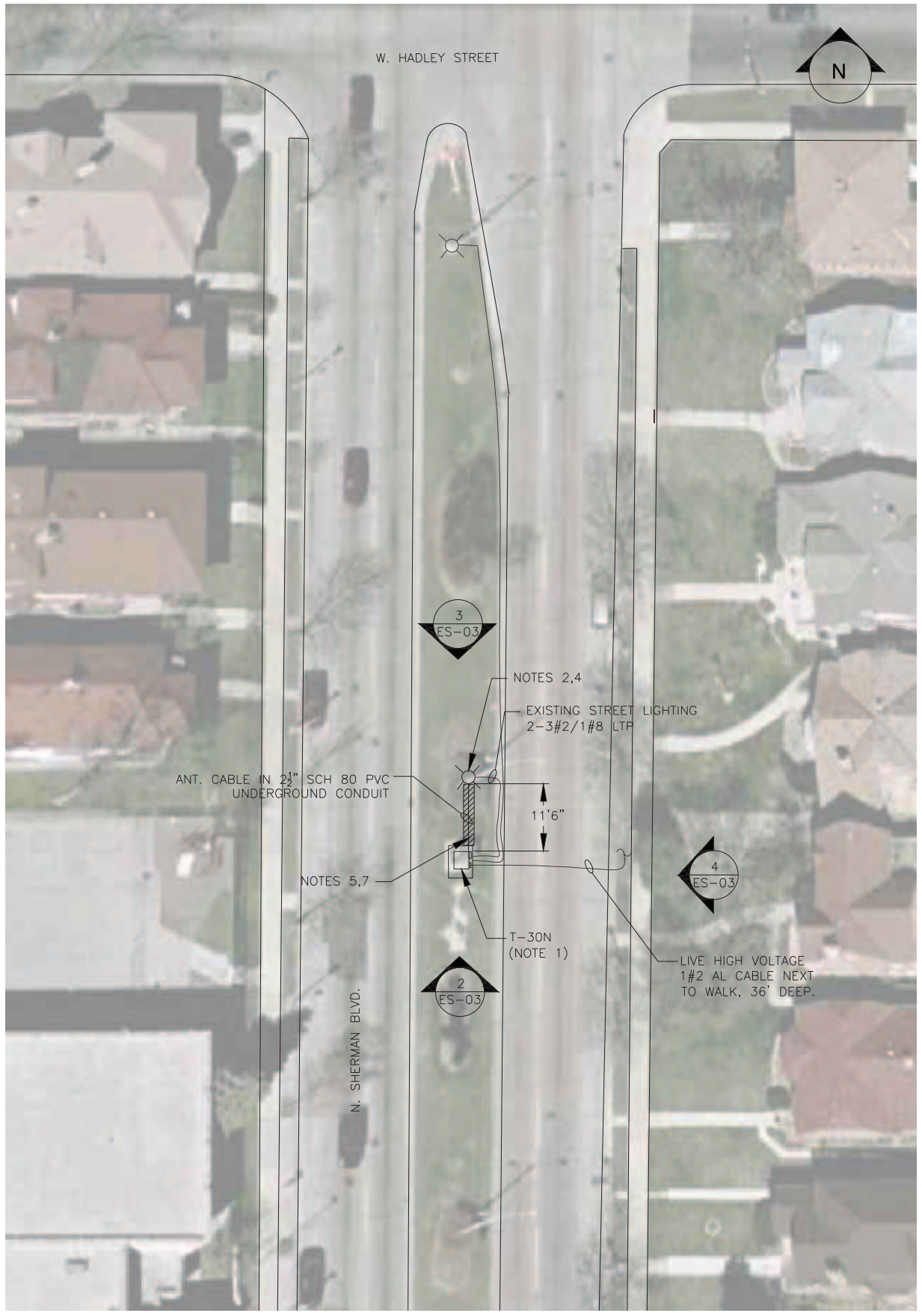

1 ES-03 T-30N SITE PLAN
NTS

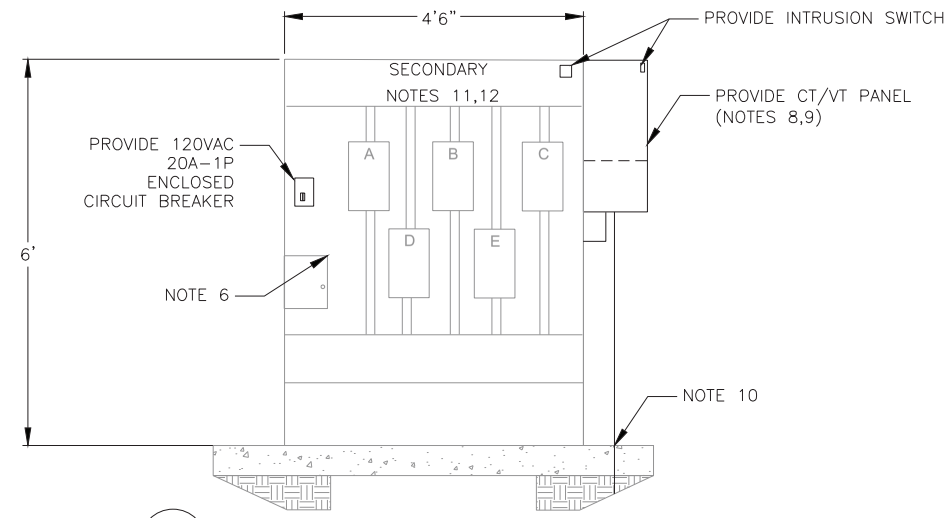

2 ES-03 EXISTING TRANSCLOSURE SOUTH ELEVATION
NTS

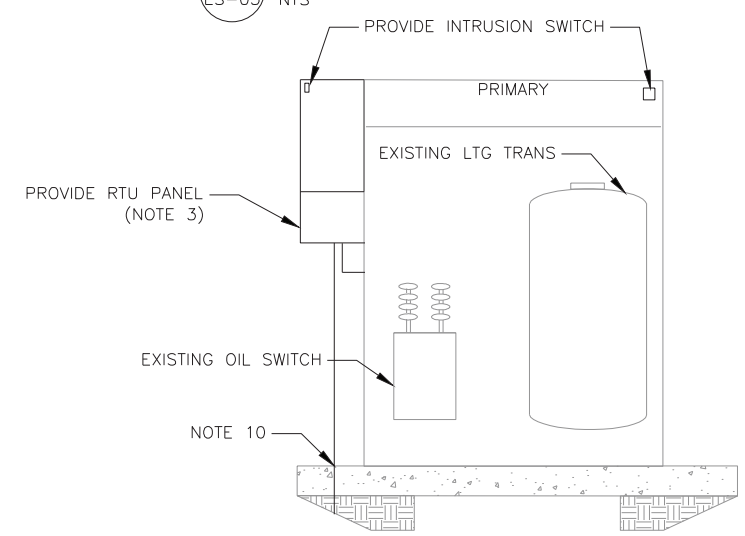

3 ES-03 EXISTING TRANSCLOSURE NORTH ELEVATION
NTS

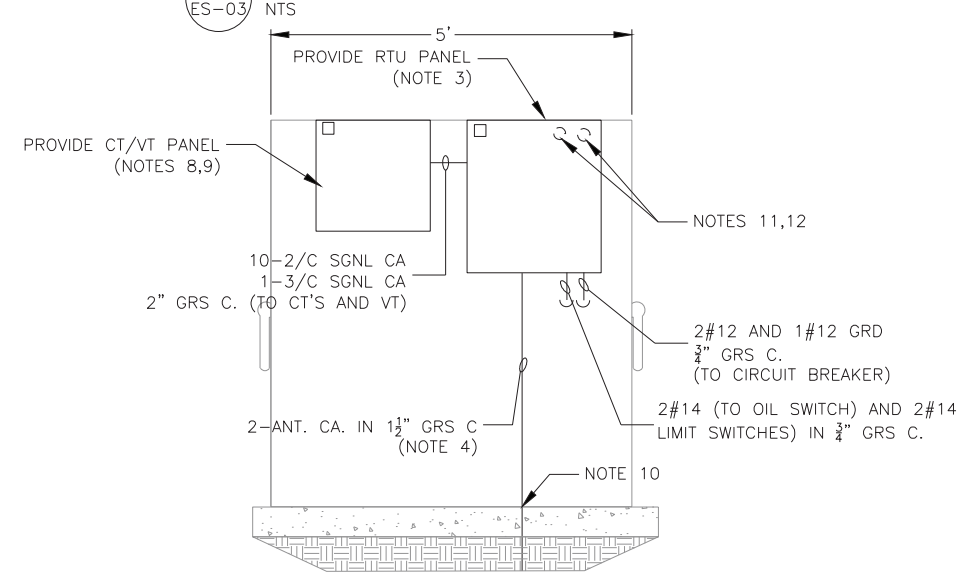

4 ES-03 EXISTING TRANSCLOSURE EAST ELEVATION
NTS

NOTES:

1. EXISTING DOUBLE-SIDED TRANSCLOSURE MOUNTED ON CONCRETE PAD.
2. MOUNT (2) NEW ANTENNAS ON EXISTING 31' CONCRETE LIGHT POLE. ONE ANTENNA IS USED FOR REPEATER APPLICATION AND ONE IS USED FOR DIRECT COMMUNICATION TO FH34.
3. REFER TO DRAWING ED-03 FOR INSTALLATION DETAILS.
4. REFER TO DRAWING ED-01 FOR ANTENNA MOUNTING DETAIL.
5. REFER TO DRAWING ED-07 FOR CONDUIT DETAIL.
6. REMOVE LOCAL CONTROL PANEL.
7. HATCH AREA INDICATE AREAS TO REMOVE AND REPLACE PAVEMENT, SIDEWALK, AND/OR GRASS AREAS BACK TO ORIGINAL CONDITION.
8. T-30N HAS TEN MULTIPLE CIRCUITS IN SERVICE AND ONE MAIN FEED. PROVIDE ONE CT FOR EACH CIRCUIT AND ONE VT FOR THE MAIN FEED.
9. REFER TO DRAWING ED-06 FOR CT/VT MOUNTING DETAILS.
10. PROVIDE CORE THROUGH EXISTING CONCRETE PAD AS CLOSE AS POSSIBLE TO ENCLOSURE FACE. ROUTE RACEWAY ADJACENT TO ENCLOSURE STRAIGHT THRU CORED HOLE. PROVIDE CAULK SEAL IN CONCRETE GAP.
11. REMOVE EXISTING CABLE(S) FROM TRANSFORMER TO DISCONNECTS AND REPLACE WITH NEW 3/O AWG CABLE FROM TRANSFORMER TO PDB WITH NEW 6 AWG CABLES FROM DISCONNECTS TO PDB LOCATED IN NEW CT/VT PANEL.
12. PROVIDE 2-#12 AWG TAPPED TO PDB IN NEW CT/VT PANEL AND CONNECT TO VT MOUNTED IN NEW CT/VT PANEL.
13. REFERENCE LATEST AVAILABLE UNDERGROUND DRAWINGS. CONTRACTOR TO IDENTIFY ALL UNDERGROUND UTILITIES PRIOR TO WORK ON THIS DRAWING.

NO.	BY	DATE	DESCRIPTION

REVISIONS

STREET LIGHTING MASTER CONTROL
SCADA SYSTEM
PHASE 3

T-30N SITE
ELECTRICAL LAYOUT DRAWING

Westin
WESTIN ENGINEERING, INC.
303 W. MADISON STREET, SUITE 1110
CHICAGO, IL 60606

CITY OF MILWAUKEE

DEPARTMENT OF PUBLIC WORKS

DRAWN BY:	J. JACKSON	SHEET NO.:	08 OF 26
CHECKED BY:	J. MIRABELLA	DRAWING NO.:	ES-03
APPROVED BY:	B. BIEHL		
DATE:	11/02/2012		
SCALE:		SIZE:	11"x17"
CONTRACT NO.:		PROJECT NO.:	7434

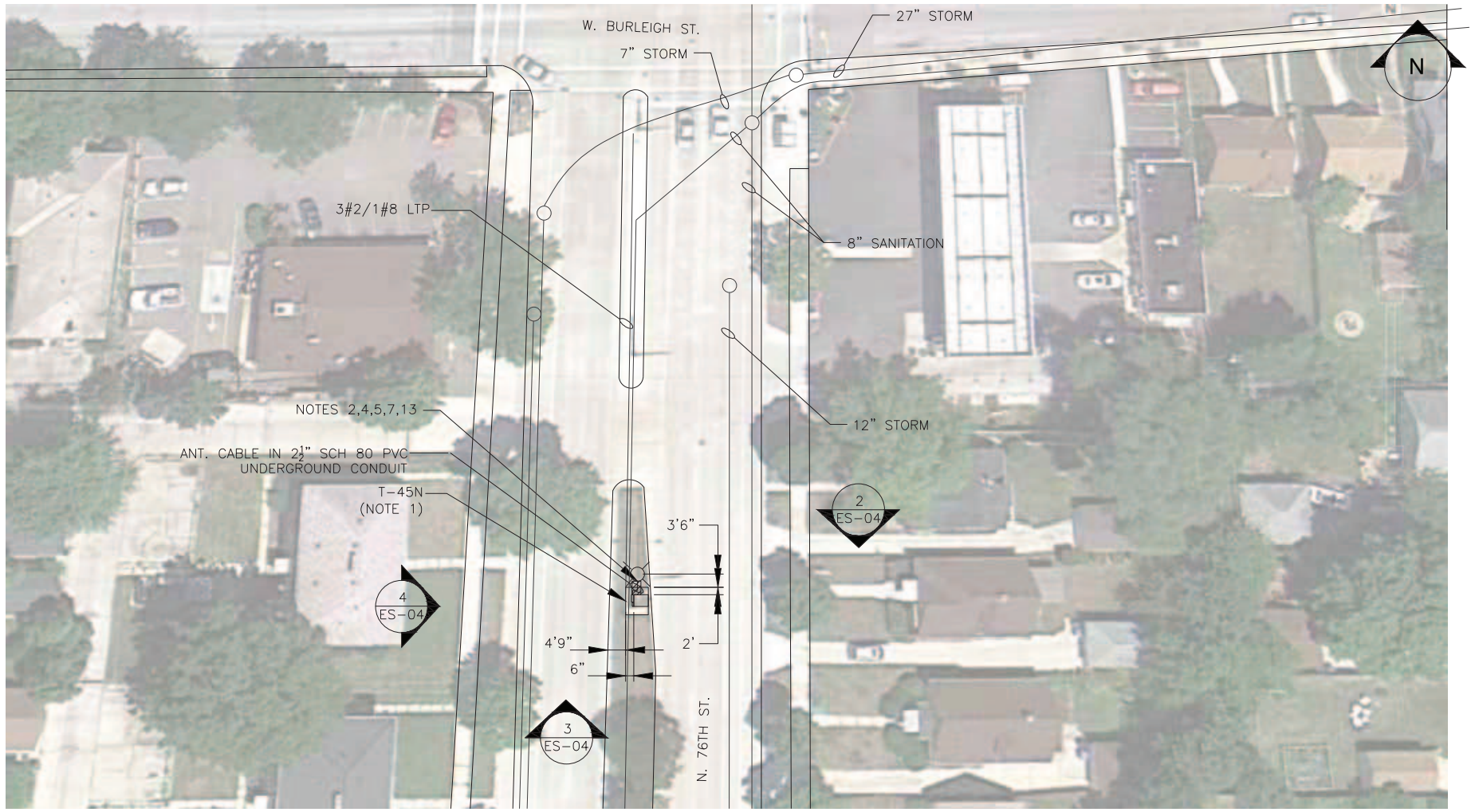

1 ES-04 T-45N SITE PLAN
NTS

NOTES:

1. EXISTING DOUBLE-SIDE DUAL DOOR TRANSCLOSURE MOUNTED ON CONCRETE PAD.
2. MOUNT NEW ANTENNA ON EXISTING 26' WOODEN POLE .
3. REFER TO DRAWING ED-03 FOR INSTALLATION DETAILS.
4. REFER TO DRAWING ED-01 FOR ANTENNA MOUNTING DETAIL.
5. REFER TO DRAWING ED-07 FOR CONDUIT DETAIL.
6. REMOVE LOCAL CONTROL PANEL.
7. HATCH AREA INDICATE AREAS TO REMOVE AND REPLACE PAVEMENT, SIDEWALK, AND/OR GRASS AREAS BACK TO ORIGINAL CONDITION.
8. T-45N HAS SIX MULTIPLE CIRCUITS IN SERVICE AND ONE MAIN FEED. PROVIDE ONE CT FOR EACH CIRCUIT AND ONE VT FOR THE MAIN FEED.
9. REFER TO DRAWING ED-06 FOR CT/VT MOUNTING DETAILS.
10. PROVIDE CORE THROUGH EXISTING CONCRETE PAD AS CLOSE AS POSSIBLE TO ENCLOSURE FACE. ROUTE RACEWAY ADJACENT TO ENCLOSURE STRAIGHT THRU CORED HOLE. PROVIDE CAULK SEAL IN CONCRETE GAP.
11. REMOVE EXISTING CABLE(S) FROM TRANSFORMER TO DISCONNECTS AND REPLACE WITH NEW 3/0 AWG CABLE FROM TRANSFORMER TO PDB WITH NEW 6 AWG CABLES FROM DISCONNECTS TO PDB LOCATED IN NEW CT/VT PANEL.
12. PROVIDE 2-#12 AWG TAPPED TO PDB IN NEW CT/VT PANEL AND CONNECT TO VT MOUNTED IN NEW CT/VT PANEL.
13. EXISTING LIGHTING CIRCUITS LOCATED UNDERGROUND IN CROSS HATCH.
14. REFERENCE LATEST AVAILABLE UNDERGROUND DRAWINGS. CONTRACTOR TO IDENTIFY ALL UNDERGROUND UTILITIES PRIOR TO WORK ON THIS DRAWING.

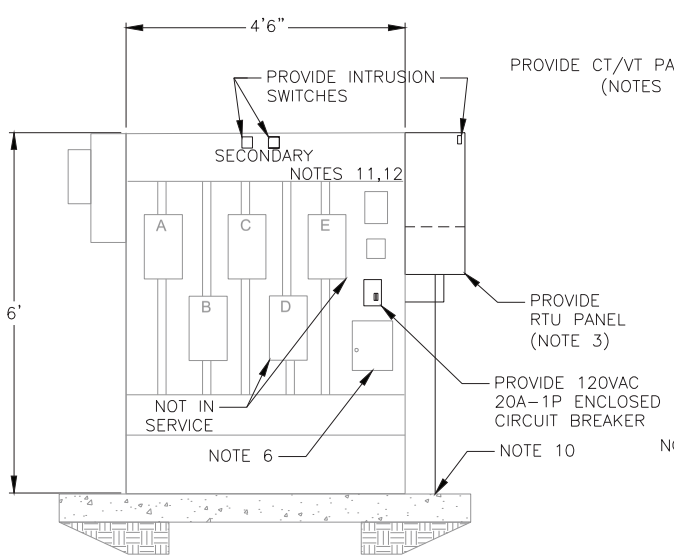

2 ES-04 EXISTING TRANSCLOSURE NORTH ELEVATION

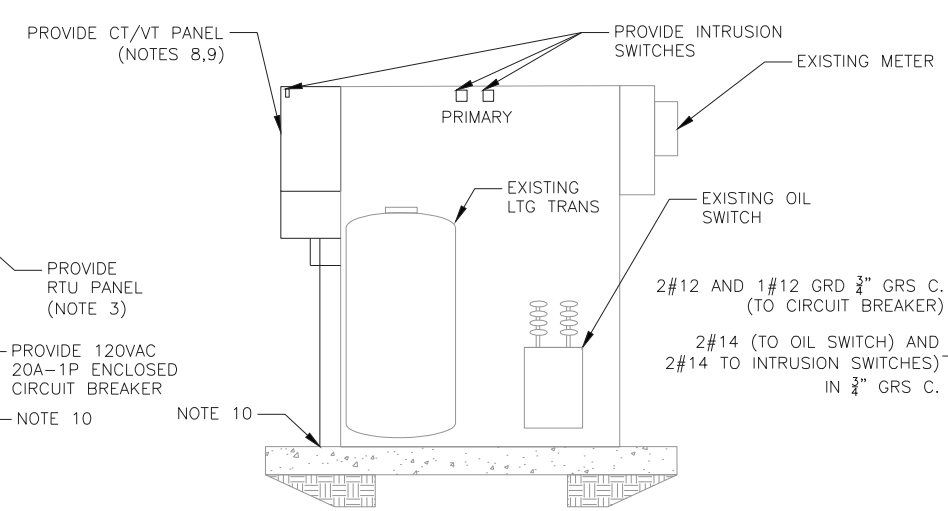

3 ES-04 EXISTING TRANSCLOSURE SOUTH ELEVATION
NTS

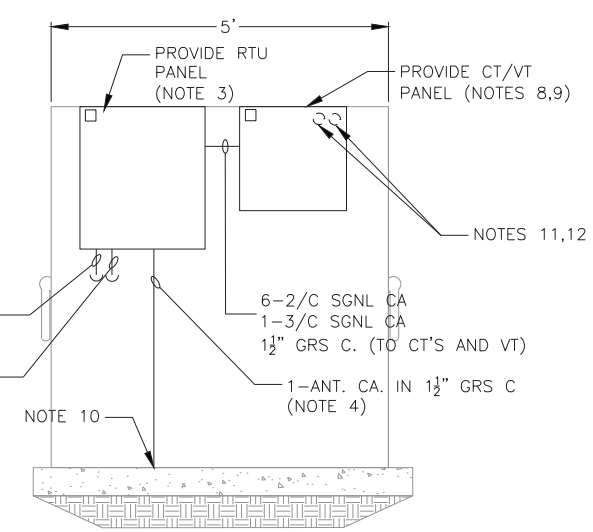

4 ES-04 EXISTING TRANSCLOSURE WEST ELEVATION

NO.	BY	DATE	DESCRIPTION

REVISIONS

STREET LIGHTING MASTER CONTROL
SCADA SYSTEM
PHASE 3

T-45N SITE
ELECTRICAL LAYOUT DRAWING

Westin
WESTIN ENGINEERING, INC.
303 W. MADISON STREET, SUITE 1110
CHICAGO, IL 60606

CITY OF MILWAUKEE

DEPARTMENT OF PUBLIC WORKS

DRAWN BY:	J. JACKSON	SHEET NO.: 09	OF 26
CHECKED BY:	J. MIRABELLA	DRAWING NO.: ES-04	
APPROVED BY:	B. BIEHL		
DATE:	11/02/2012		
SCALE:		SIZE:	11"x17"
CONTRACT NO.:		PROJECT NO.:	7434

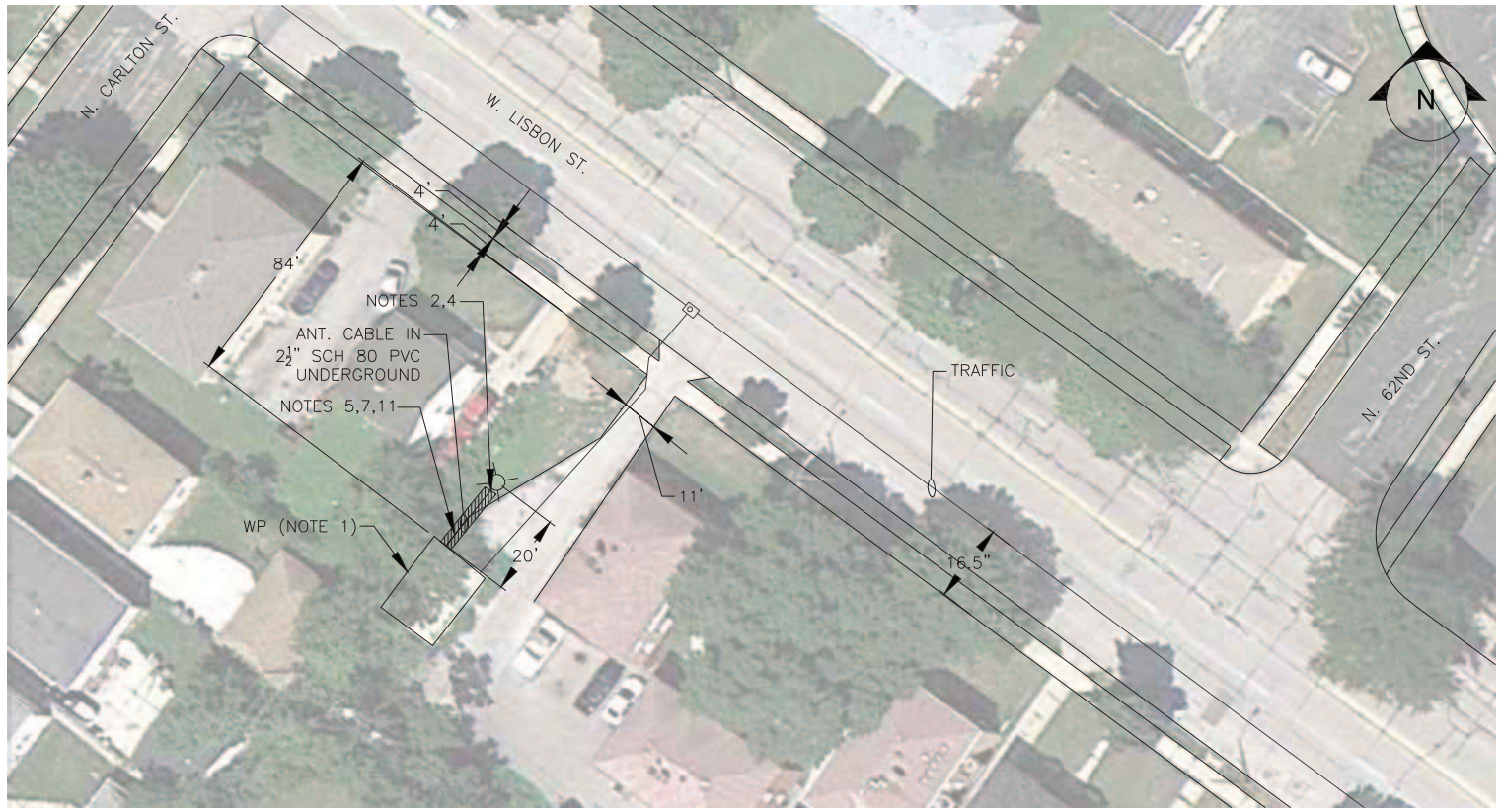

1 ES-05 WP SITE PLAN
NTS

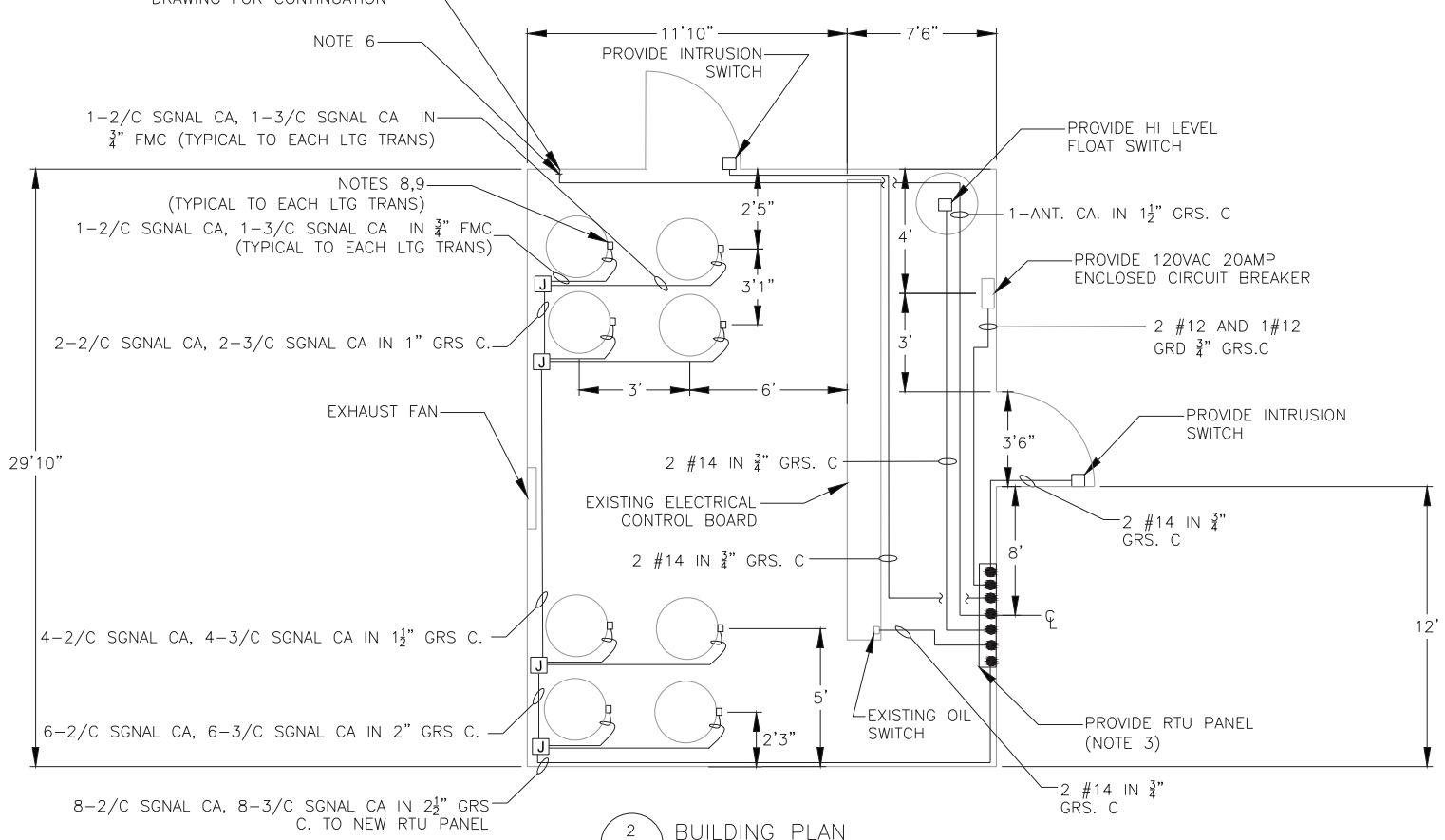

2 ES-05 BUILDING PLAN
NTS

NOTES:

1. EXISTING ABOVE GROUND SUBSTATION. SEE BUILDING PLAN.
2. MOUNT NEW ANTENNA ON NEW LIGHT POLE. MPW TO INSTALL NEW POLE.
3. REFER TO DRAWING ED-05 FOR BUILDING INSTALLATION DETAILS.
4. REFER TO DRAWING ED-01 FOR ANTENNA MOUNTING DETAIL.
5. REFER TO DRAWING ED-07 FOR CONDUIT DETAIL
6. PROVIDE GRS TO PVC ADAPTOR.
7. HATCH AREA INDICATE AREAS TO REMOVE AND REPLACE PAVEMENT, SIDEWALK, AND/OR GRASS AREAS BACK TO ORIGINAL CONDITION.
8. WP HAS EIGHT SERIES CIRCUITS IN SERVICE. PROVIDE ONE CT AND ONE VT FOR EACH CIRCUIT.
9. REFER TO DETAIL 1 ON DRAWING ED-06 FOR CT AND VT MOUNTING DETAILS.
10. EXISTING LIGHTING CIRCUITS LOCATED UNDERGROUND IN CROSS HATCH.
11. REFERENCE LATEST AVAILABLE UNDERGROUND DRAWINGS. CONTRACTOR TO IDENTIFY ALL UNDERGROUND UTILITIES PRIOR TO WORK ON THIS DRAWINGS.

NO.	BY	DATE	DESCRIPTION

REVISIONS

STREET LIGHTING MASTER CONTROL
SCADA SYSTEM
PHASE 3

WP SITE
ELECTRICAL LAYOUT DRAWING

Westin

WESTIN ENGINEERING, INC.
303 W. MADISON STREET, SUITE 1110
CHICAGO, IL 60606

CITY OF MILWAUKEE

DEPARTMENT OF PUBLIC WORKS

DRAWN BY:	J. JACKSON	SHEET NO.:	10 OF 26
CHECKED BY:	J. MIRABELLA	DRAWING NO.:	ES-05
APPROVED BY:	B. BIEHL		
DATE:	11/02/2012		
SCALE:		SIZE:	11"x17"
CONTRACT NO.:		PROJECT NO.:	7434

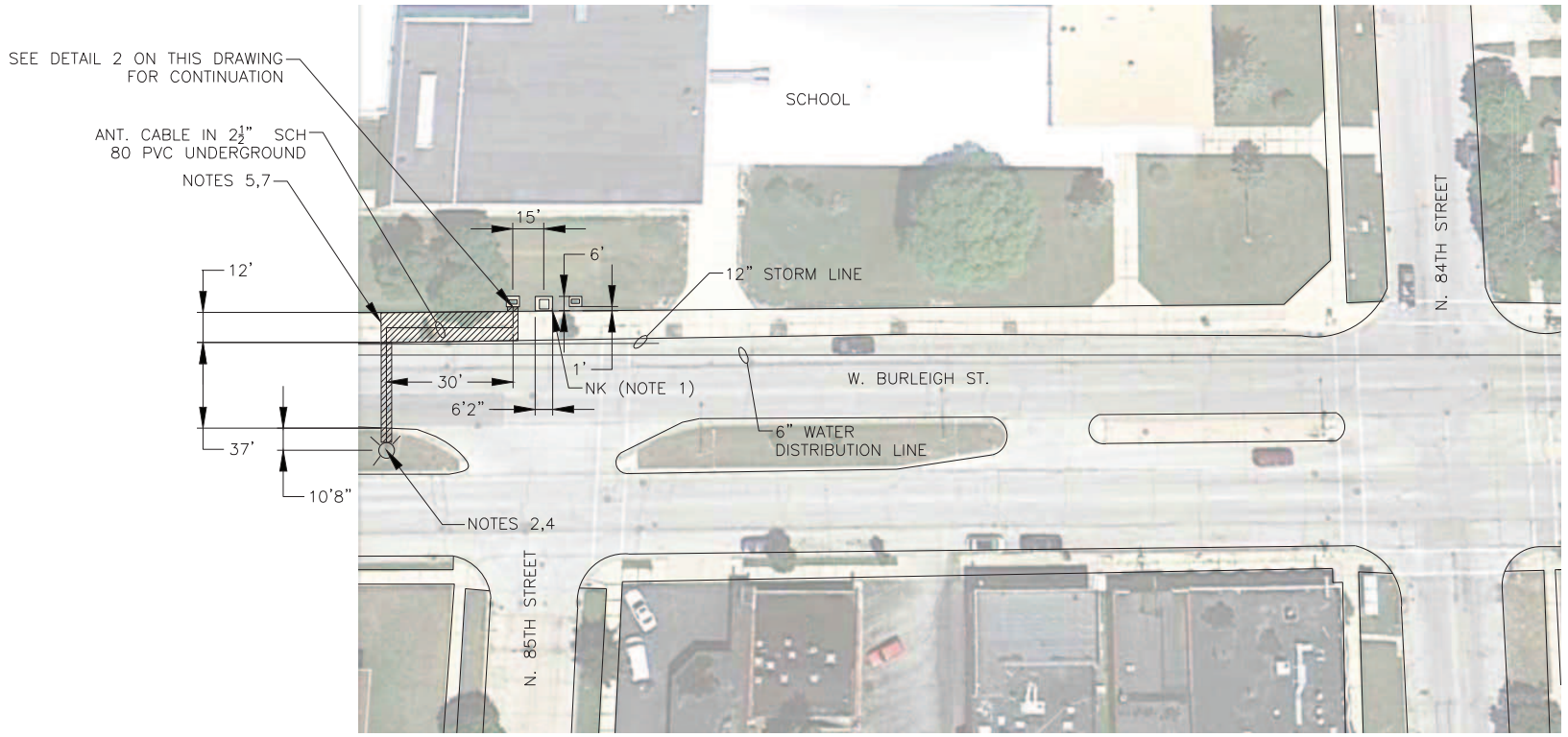

1 ES-06 NK SITE PLAN
NTS

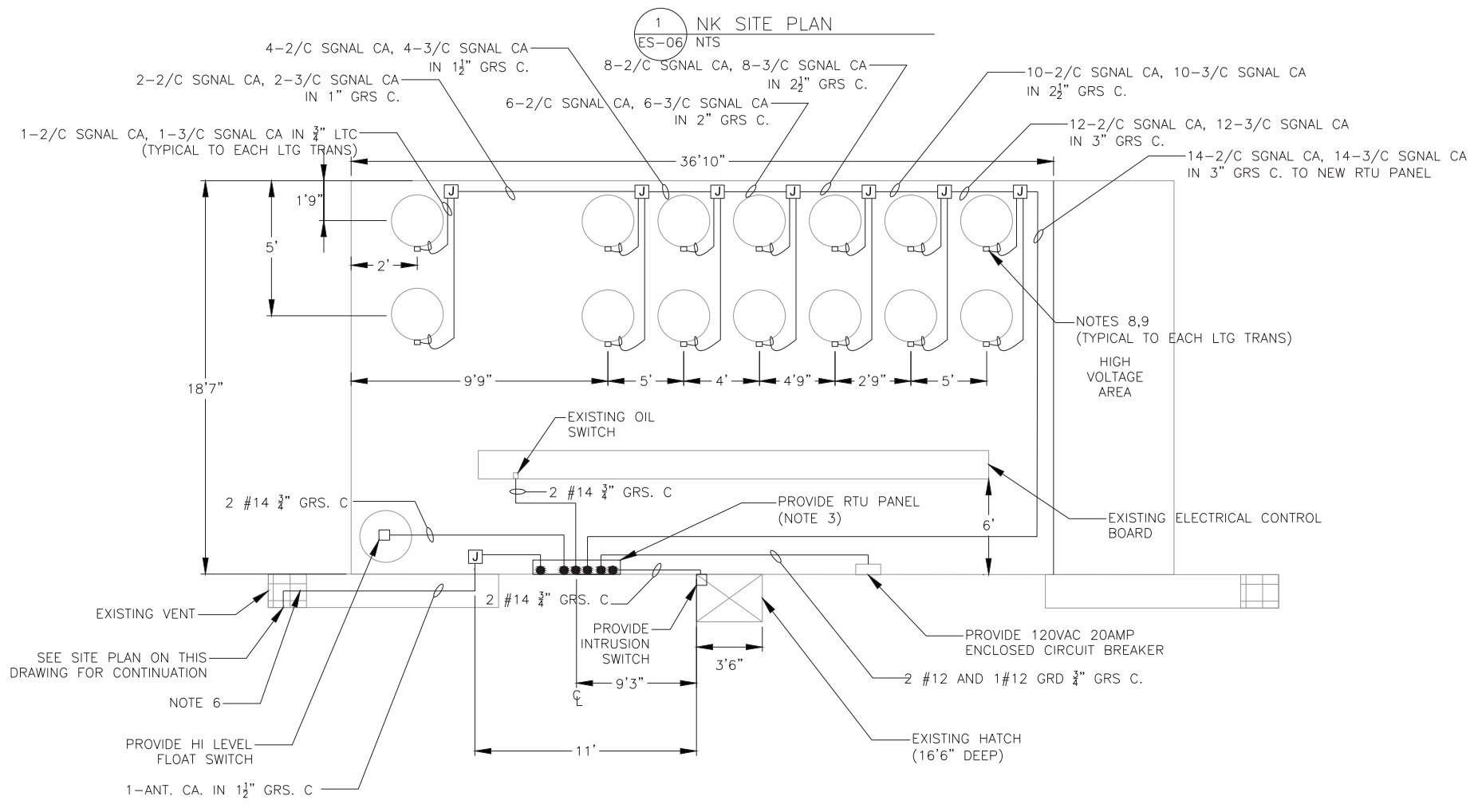

2 ES-06 VAULT PLAN
NTS

NOTES:

1. EXISTING UNDERGROUND SUBSTATION. SEE VAULT PLAN ON THIS DRAWING FOR ADDITIONAL WORK.
2. MOUNT NEW ANTENNA ON EXISTING 26' CONCRETE LIGHT POLE .
3. REFER TO DRAWING ED-05 FOR VAULT INSTALLATION DETAILS.
4. REFER TO DRAWING ED-01 FOR ANTENNA MOUNTING DETAIL.
5. REFER TO DRAWING ED-07 FOR CONDUIT DETAIL
6. PROVIDE GRS TO PVC ADAPTOR IN VENT AREA.
7. HATCH AREA INDICATE AREAS TO REMOVE AND REPLACE PAVEMENT, SIDEWALK, AND/OR GRASS AREAS BACK TO ORIGINAL CONDITION.
8. NK HAS FOURTEEN SERIES CIRCUITS IN SERVICE. PROVIDE ONE CT AND ONE VT FOR EACH CIRCUIT.
9. REFER TO DETAIL 1 ON DRAWING ED-06 FOR CT AND VT MOUNTING DETAILS.
10. REFERENCE LATEST AVAILABLE UNDERGROUND DRAWINGS. CONTRACTOR TO IDENTIFY ALL UNDEGROUND UTILITIES PRIOR TO WORK ON THIS DRAWING.

NO.	BY	DATE	DESCRIPTION

REVISIONS

STREET LIGHTING MASTER CONTROL
SCADA SYSTEM
PHASE 3

NK SITE
ELECTRICAL LAYOUT DRAWING

Westin
WESTIN ENGINEERING, INC.
303 W. MADISON STREET, SUITE 1110
CHICAGO, IL 60606

CITY OF MILWAUKEE

DEPARTMENT OF PUBLIC WORKS

DRAWN BY:	J. JACKSON	SHEET NO.:	11 OF 26
CHECKED BY:	J. MIRABELLA	DRAWING NO.:	ES-06
APPROVED BY:	B. BIEHL		
DATE:	11/02/2012		
SCALE:		SIZE:	11"x17"
CONTRACT NO.:		PROJECT NO.:	7434

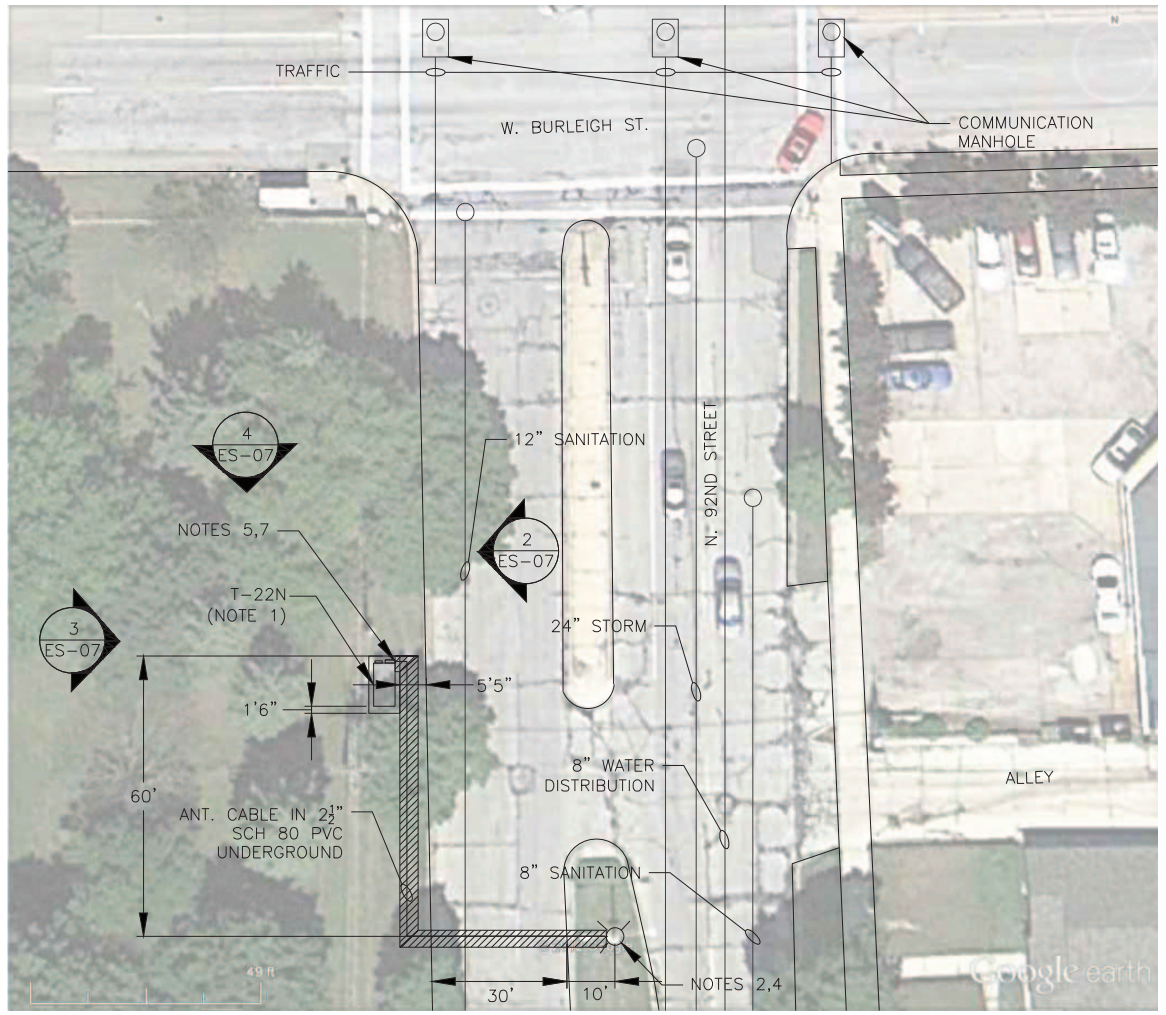

1 ES-07 T-22N SITE PLAN
NTS

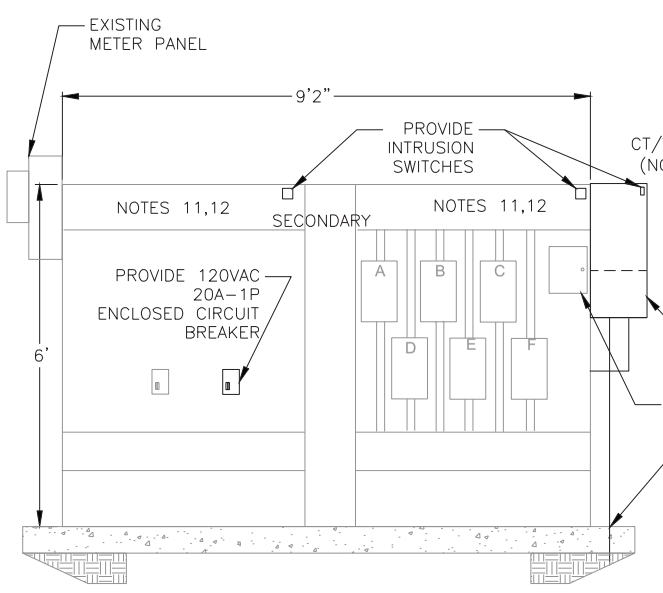

2 ES-07 EXISTING TRANSCLOSURE EAST ELEVATION
NTS

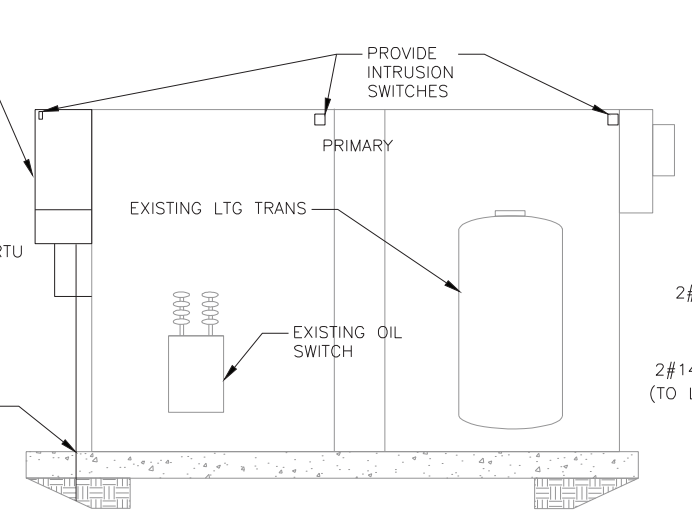

3 ES-07 EXISTING TRANSCLOSURE WEST ELEVATION
NTS

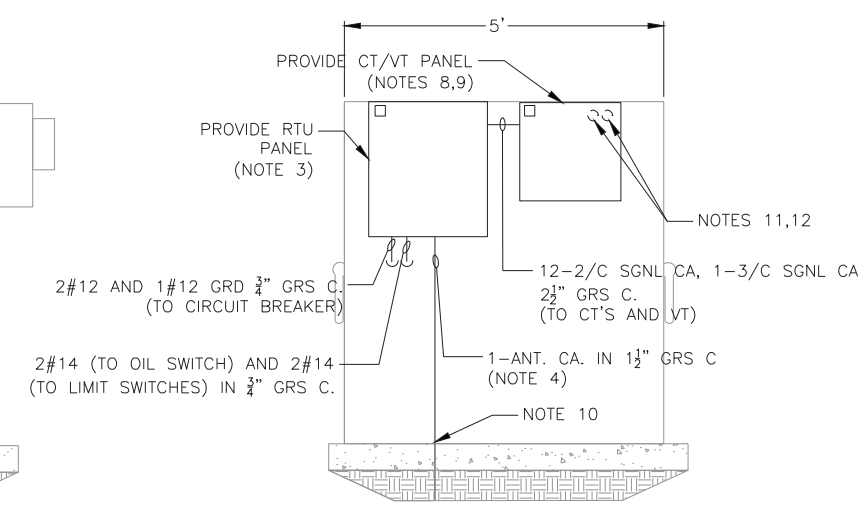

4 ES-07 EXISTING TRANSCLOSURE NORTH ELEVATION
NTS

N

NOTES:

1. EXISTING DOUBLE-SIDED TRANSCLOSURES MOUNTED ON CONCRETE PAD.
2. MOUNT NEW ANTENNA ON EXISTING 31' CONCRETE LIGHT POLE.
3. REFER TO DRAWING ED-03 FOR INSTALLATION DETAILS.
4. REFER TO DRAWING ED-01 FOR ANTENNA MOUNTING DETAIL.
5. REFER TO DRAWING ED-07 FOR CONDUIT DETAIL.
6. REMOVE LOCAL CONTROL PANEL.
7. HATCH AREA INDICATE AREAS TO REMOVE AND REPLACE PAVEMENT, SIDEWALK, AND/OR GRASS AREAS BACK TO ORIGINAL CONDITION.
8. T-22N HAS 12 MULTIPLE CIRCUITS IN SERVICE AND ONE MAIN FEED. PROVIDE ONE CT FOR EACH CIRCUIT AND ONE VT FOR THE MAIN FEED.
9. REFER TO DRAWING ED-06 FOR CT/VT MOUNTING DETAILS.
10. PROVIDE CORE THROUGH EXISTING CONCRETE PAD AS CLOSE AS POSSIBLE TO ENCLOSURE FACE. ROUTE RACEWAY ADJACENT TO ENCLOSURE STRAIGHT THRU CORED HOLE. PROVIDE CAULK SEAL IN CONCRETE GAP.
11. REMOVE EXISTING CABLE(S) FROM TRANSFORMER TO DISCONNECTS AND REPLACE WITH NEW 3/0 AWG CABLE FROM TRANSFORMER TO PDB WITH NEW 6 AWG CABLES FROM DISCONNECTS TO PDB LOCATED IN NEW CT/VT PANEL.
12. PROVIDE 2-#12 AWG TAPPED TO PDB IN NEW CT/VT PANEL AND CONNECT TO VT MOUNTED IN NEW CT/VT PANEL.
13. CONTRACTOR TO IDENTIFY ALL UNDERGROUND UTILITIES PRIOR TO WORK ON THIS DRAWING.

NO.	BY	DATE	DESCRIPTION

REVISIONS

STREET LIGHTING MASTER CONTROL
SCADA SYSTEM
PHASE 3

T-22N SITE
ELECTRICAL LAYOUT DRAWING

Westin
WESTIN ENGINEERING, INC.
303 W. MADISON STREET, SUITE 1110
CHICAGO, IL 60606

CITY OF MILWAUKEE

DEPARTMENT OF PUBLIC WORKS

DRAWN BY:	J. JACKSON	SHEET NO.: 12	OF 26
CHECKED BY:	J. MIRABELLA	DRAWING NO.: ES-07	
APPROVED BY:	B. BIEHL		
DATE:	11/02/2012		
SCALE:		SIZE:	11"x17"
CONTRACT NO.:		PROJECT NO.:	7434

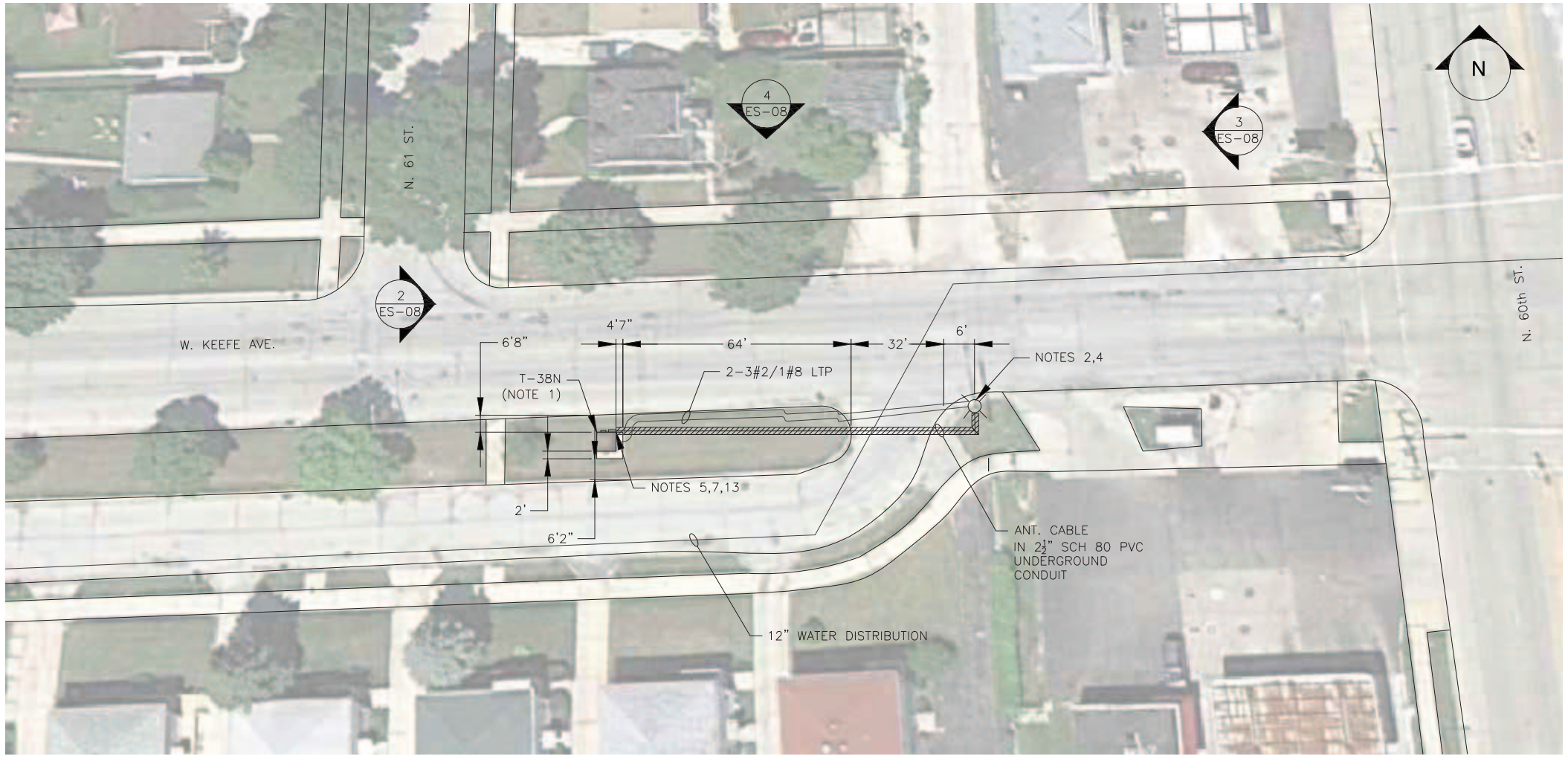

1 ES-08 T-38N SITE PLAN
NTS

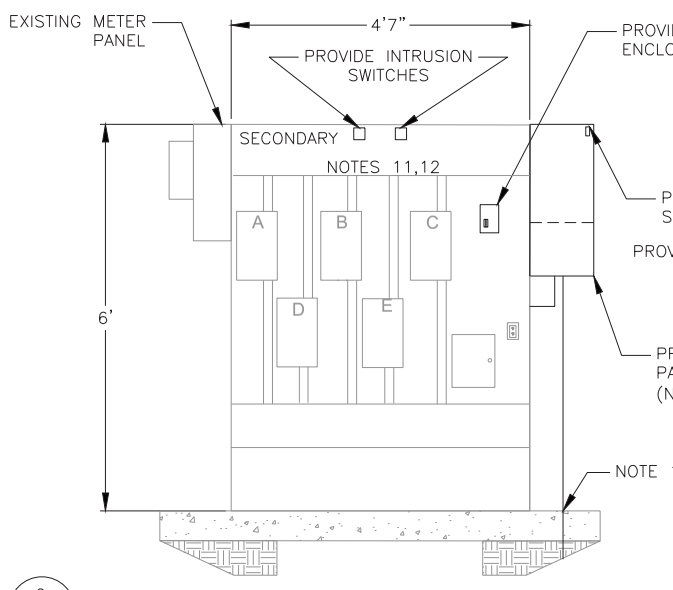

2 ES-08 EXISTING TRANSCLOSURE EAST ELEVATION
NTS

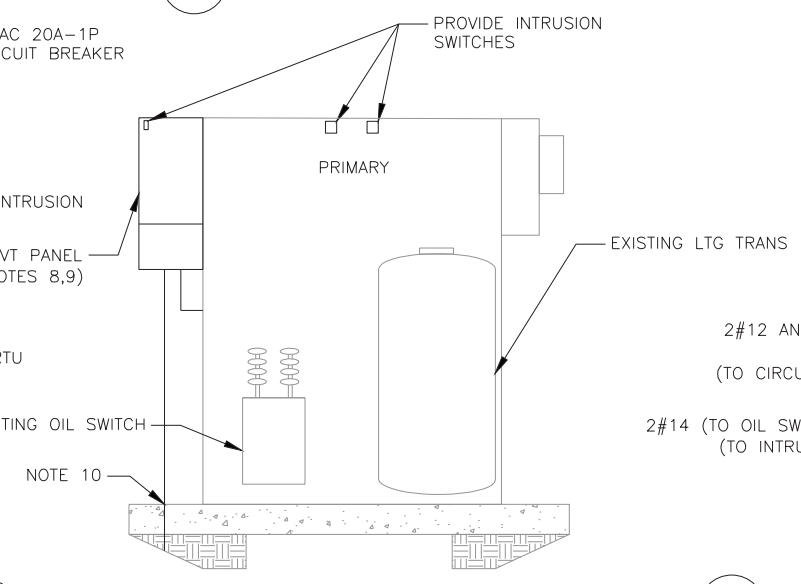

3 ES-08 EXISTING TRANSCLOSURE WEST ELEVATION
NTS

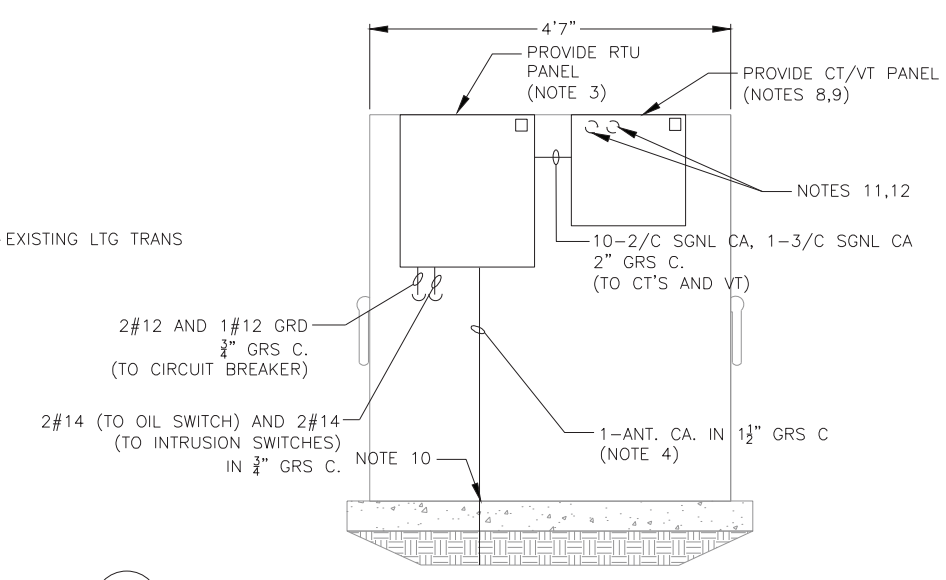

4 ES-08 EXISTING TRANSCLOSURE NORTH ELEVATION
NTS

NOTES:

1. EXISTING DOUBLE-SIDED DOUBLE DOOR TRANSCLOSURE MOUNTED ON CONCRETE PAD.
2. MOUNT NEW ANTENNA ON EXISTING 26' CONCRETE LIGHT POLE.
3. REFER TO DRAWING ED-03 FOR INSTALLATION DETAILS.
4. REFER TO DRAWING ED-01 FOR ANTENNA MOUNTING DETAIL.
5. REFER TO DRAWING ED-07 FOR CONDUIT DETAIL.
6. REMOVE LOCAL CONTROL PANEL.
7. HATCH AREAS INDICATE GRASS AREAS TO BE REPAIRED BACK TO ORIGINAL CONDITION.
8. T-38N HAS TEN MULTIPLE CIRCUITS IN SERVICE AND ONE MAIN FEED. PROVIDE ONE CT FOR EACH CIRCUIT AND ONE VT FOR THE MAIN FEED.
9. REFER TO DRAWING ED-06 FOR CT/VT MOUNTING DETAILS.
10. PROVIDE CORE THROUGH EXISTING CONCRETE PAD AS CLOSE AS POSSIBLE TO ENCLOSURE FACE. ROUTE RACEWAY ADJACENT TO ENCLOSURE STRAIGHT THRU CORED HOLE. PROVIDE CAULK SEAL IN CONCRETE GAP.
11. REMOVE EXISTING CABLE(S) FROM TRANSFORMER TO DISCONNECTS AND REPLACE WITH NEW 3/0 AWG CABLE FROM TRANSFORMER TO PDB WITH NEW 6 AWG CABLES FROM DISCONNECTS TO PDB LOCATED IN NEW CT/VT PANEL.
12. PROVIDE 2-#12 AWG TAPPED TO PDB IN NEW CT/VT PANEL AND CONNECT TO VT MOUNTED IN NEW CT/VT PANEL.
13. EXISTING LIGHTING CIRCUITS LOCATED UNDERGROUND IN CROSS HATCH.
14. CONTRACTOR TO IDENTIFY ALL UNDERGROUND UTILITIES PRIOR TO WORK ON THIS DRAWING.

NO.	BY	DATE	DESCRIPTION

REVISIONS

STREET LIGHTING MASTER CONTROL
SCADA SYSTEM
PHASE 3

T-38N SITE
ELECTRICAL LAYOUT DRAWING

Westin
WESTIN ENGINEERING, INC.
303 W. MADISON STREET, SUITE 1110
CHICAGO, IL 60606

CITY OF MILWAUKEE

DEPARTMENT OF PUBLIC WORKS

DRAWN BY:	J. JACKSON	SHEET NO.: 13 OF 26	
CHECKED BY:	J. MIRABELLA	DRAWING NO.: ES-08	
APPROVED BY:	B. BIEHL		
DATE:	11/02/2012		
SCALE:		SIZE:	11"x17"
CONTRACT NO.:		PROJECT NO.:	7434

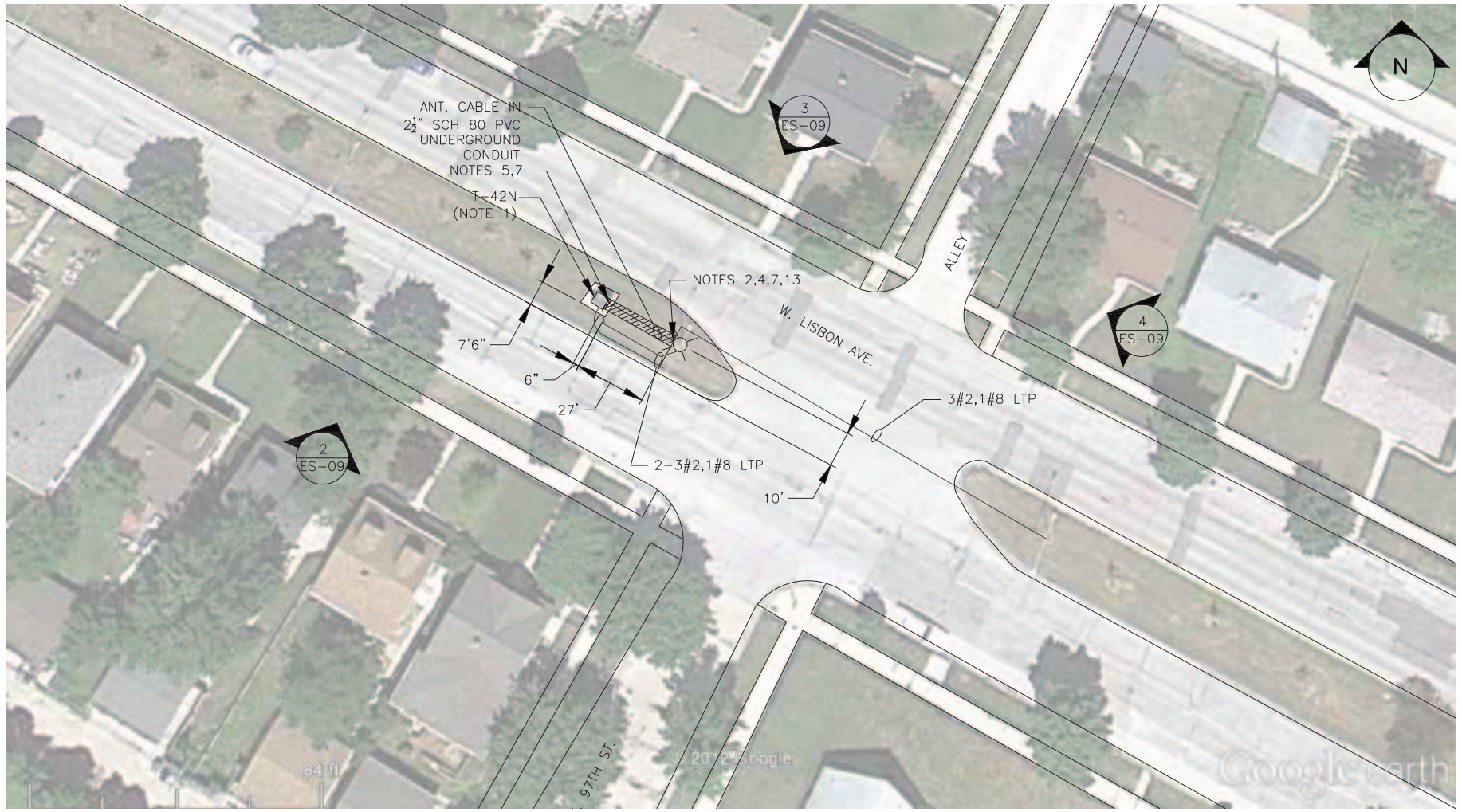

1 ES-09 T-42N SITE PLAN
NTS

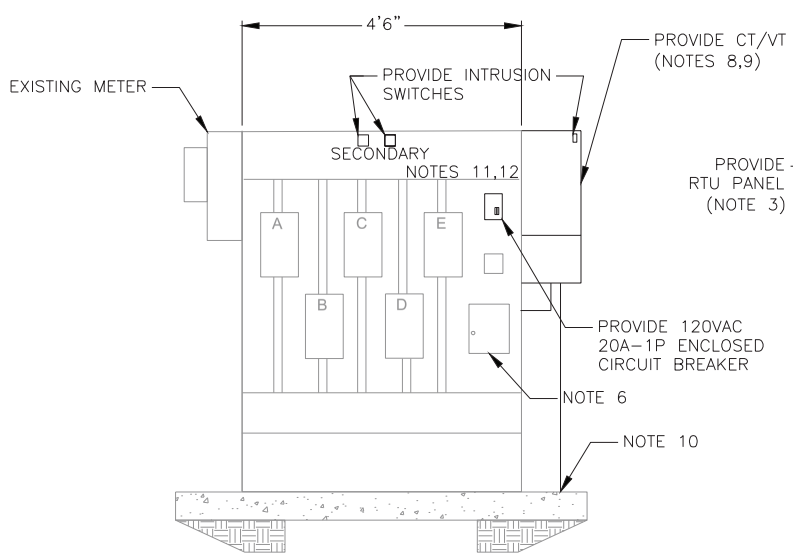

2 ES-09 EXISTING TRANSCLOSURE SOUTHWEST ELEVATION

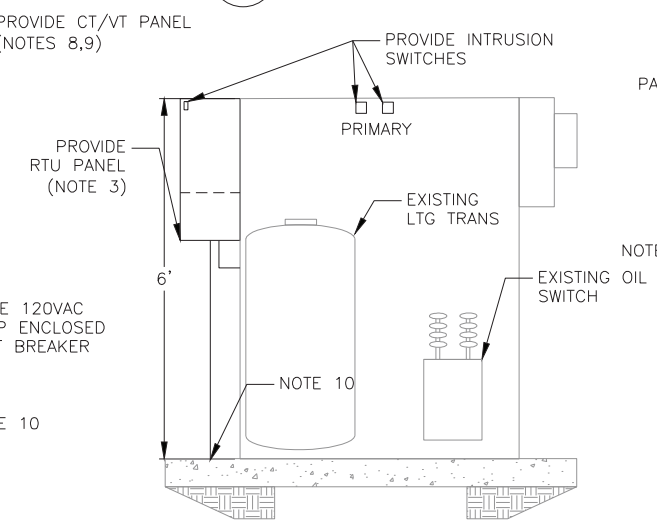

3 ES-09 EXISTING TRANSCLOSURE NORTHEAST ELEVATION
NTS

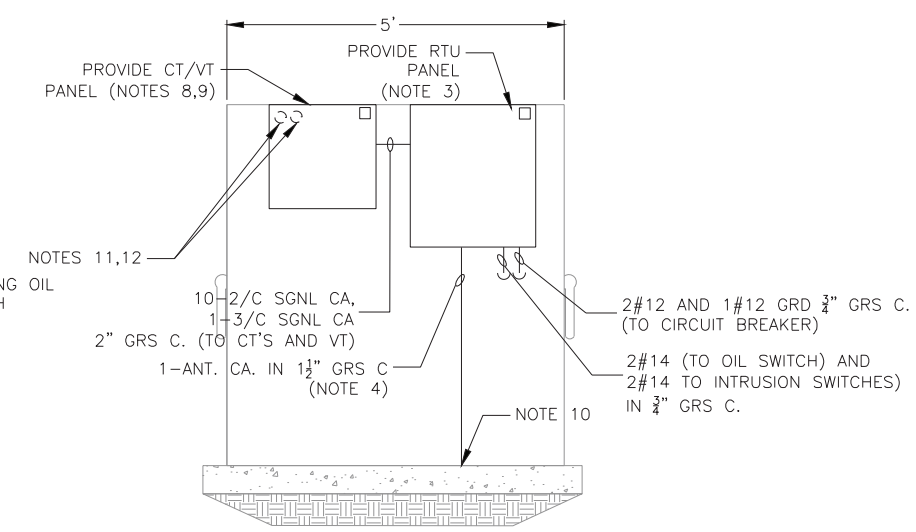

4 ES-09 EXISTING TRANSCLOSURE SOUTHEAST ELEVATION
NTS

NOTES:

1. EXISTING DOUBLE-SIDE DUAL DOOR TRANSCLOSURE MOUNTED ON CONCRETE PAD.
2. MOUNT NEW ANTENNA ON EXISTING 26' CONCRETE LIGHT POLE.
3. REFER TO DRAWING ED-03 FOR INSTALLATION DETAILS.
4. REFER TO DRAWING ED-01 FOR ANTENNA MOUNTING DETAIL.
5. REFER TO DRAWING ED-07 FOR CONDUIT DETAIL.
6. REMOVE LOCAL CONTROL PANEL.
7. HATCH AREA INDICATE AREAS TO REMOVE AND REPLACE PAVEMENT, SIDEWALK, AND/OR GRASS AREAS BACK TO ORIGINAL CONDITION.
8. T-42N HAS TEN MULTIPLE CIRCUITS IN SERVICE AND ONE MAIN FEED. PROVIDE ONE CT FOR EACH CIRCUIT AND ONE VT FOR THE MAIN FEED.
9. REFER TO DRAWING ED-06 FOR CT/VT MOUNTING DETAILS.
10. PROVIDE CORE THROUGH EXISTING CONCRETE PAD AS CLOSE AS POSSIBLE TO ENCLOSURE FACE. ROUTE RACEWAY ADJACENT TO ENCLOSURE STRAIGHT THRU CORED HOLE. PROVIDE CAULK SEAL IN CONCRETE GAP.
11. REMOVE EXISTING CABLE(S) FROM TRANSFORMER TO DISCONNECTS AND REPLACE WITH NEW 3/O AWG CABLE FROM TRANSFORMER TO PDB WITH NEW 6 AWG CABLES FROM DISCONNECTS TO PDB LOCATED IN NEW CT/VT PANEL.
12. PROVIDE 2-#12 AWG TAPPED TO PDB IN NEW CT/VT PANEL AND CONNECT TO VT MOUNTED IN NEW CT/VT PANEL.
13. EXISTING LIGHTING CIRCUITS LOCATED UNDERGROUND IN CROSS HATCH.
14. REFERENCE LATEST AVAILABLE UNDERGROUND DRAWINGS. CONTRACTOR TO IDENTIFY ALL UNDERGROUND UTILITIES PRIOR TO WORK ON THIS DRAWING.

NO.	BY	DATE	DESCRIPTION

REVISIONS

STREET LIGHTING MASTER CONTROL
SCADA SYSTEM
PHASE 3

T-42N SITE
ELECTRICAL LAYOUT DRAWING

Westin

WESTIN ENGINEERING, INC.
303 W. MADISON STREET, SUITE 1110
CHICAGO, IL 60606

CITY OF MILWAUKEE

DEPARTMENT OF PUBLIC WORKS

DRAWN BY:	J. JACKSON	SHEET NO.: 14	OF 26
CHECKED BY:	J. MIRABELLA	DRAWING NO.: ES-09	
APPROVED BY:	B. BIEHL		
DATE:	11/02/2012		
SCALE:		SIZE:	11"x17"
CONTRACT NO.:		PROJECT NO.:	7434

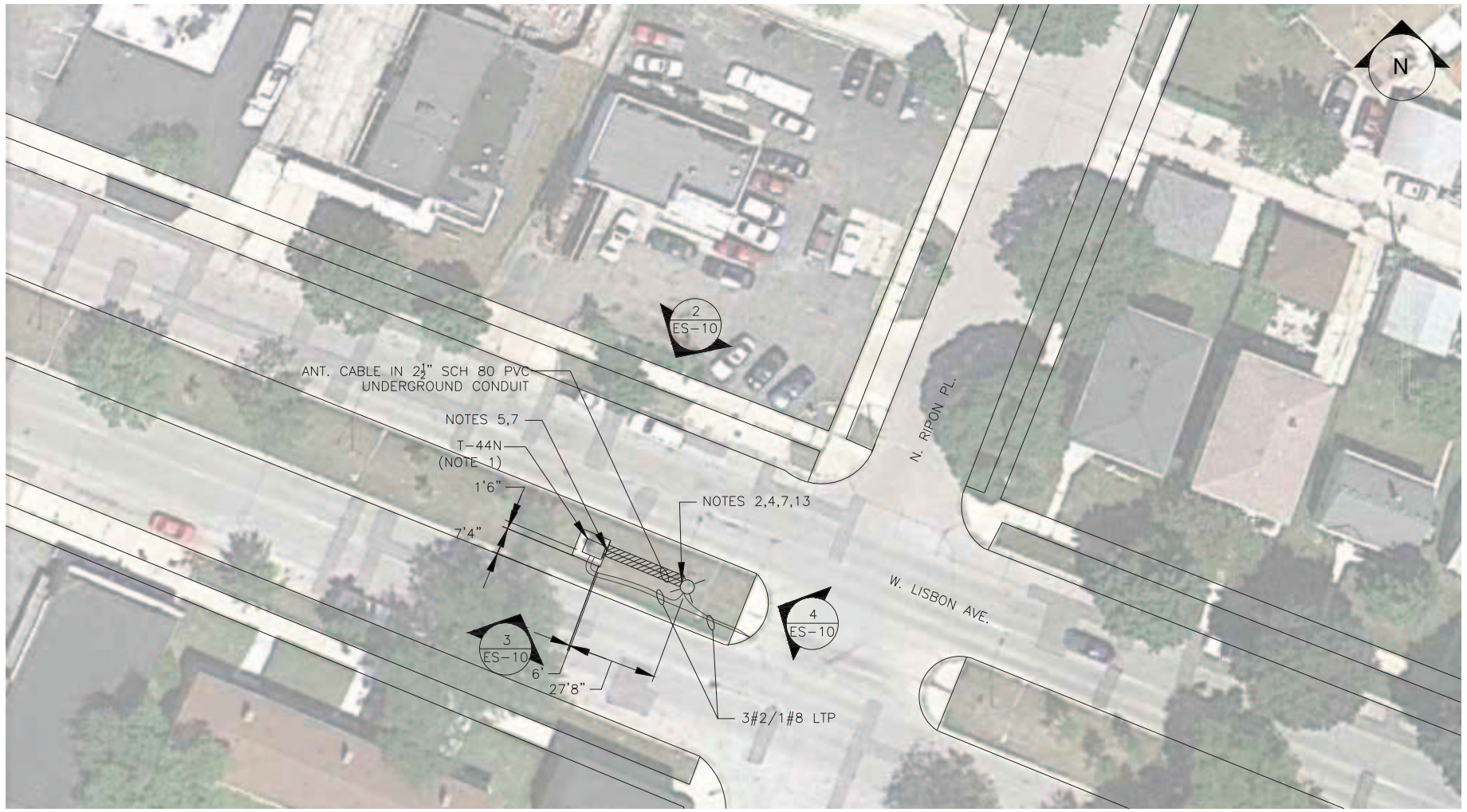

1 ES-10 T-44N SITE PLAN
NTS

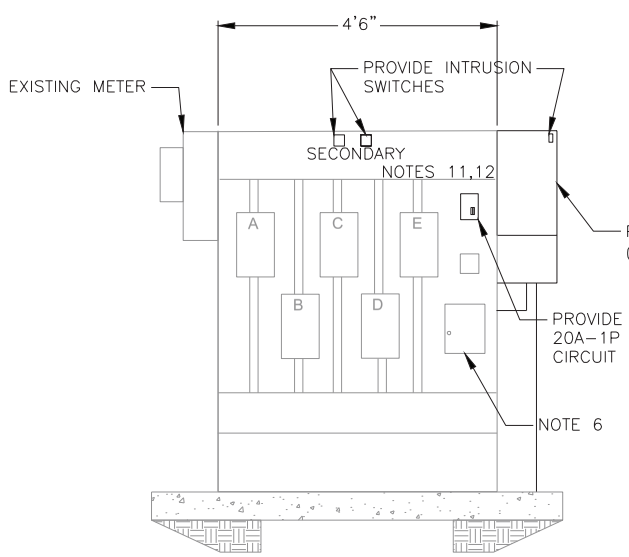

2 ES-10 EXISTING TRANSCLOSURE SOUTHWEST ELEVATION

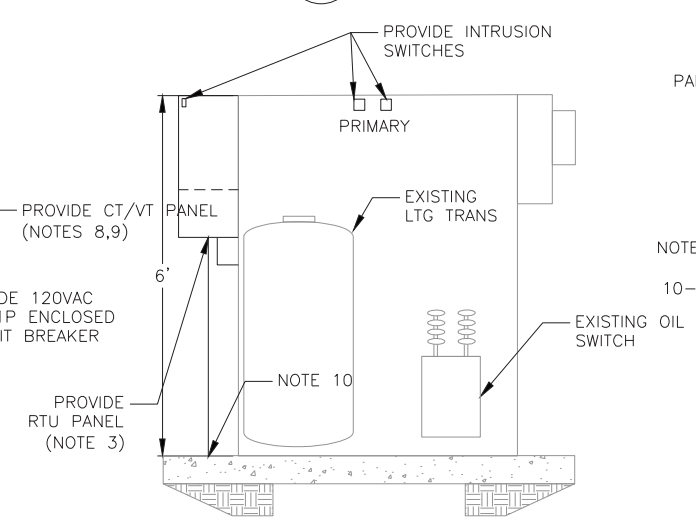

3 ES-10 EXISTING TRANSCLOSURE NORTHEAST ELEVATION
NTS

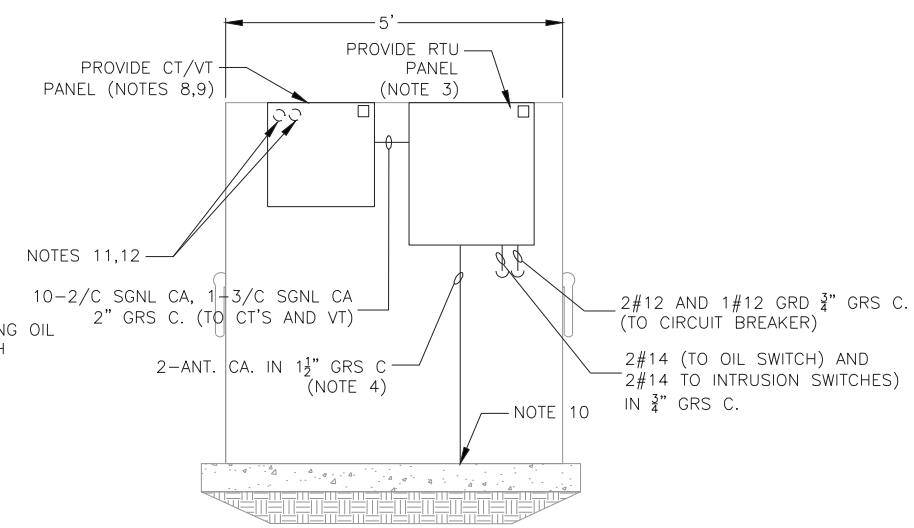

4 ES-10 EXISTING TRANSCLOSURE SOUTHEAST ELEVATION

NOTES:

1. EXISTING DOUBLE-SIDE DUAL DOOR TRANSCLOSURE MOUNTED ON CONCRETE PAD.
2. MOUNT (2) NEW ANTENNAS ON EXISTING 26' CONCRETE LIGHT POLE. ONE ANTENNA IS USED FOR REPEATER APPLICATION AND ONE ANTENNA IS USED FOR DIRECT COMMUNICATION TO FH34.
3. REFER TO DRAWING ED-03 FOR INSTALLATION DETAILS.
4. REFER TO DRAWING ED-01 FOR ANTENNA MOUNTING DETAIL.
5. REFER TO DRAWING ED-07 FOR CONDUIT DETAIL.
6. REMOVE LOCAL CONTROL PANEL.
7. HATCH AREA INDICATE AREAS TO REMOVE AND REPLACE PAVEMENT, SIDEWALK, AND/OR GRASS AREAS BACK TO ORIGINAL CONDITION.
8. T-44N HAS TEN MULTIPLE CIRCUITS IN SERVICE AND ONE MAIN FEED. PROVIDE ONE CT FOR EACH CIRCUIT AND ONE VT FOR THE MAIN FEED.
9. REFER TO DRAWING ED-06 FOR CT/VT MOUNTING DETAILS.
10. PROVIDE CORE THROUGH EXISTING CONCRETE PAD AS CLOSE AS POSSIBLE TO ENCLOSURE FACE. ROUTE RACEWAY ADJACENT TO ENCLOSURE STRAIGHT THRU CORED HOLE. PROVIDE CAULK SEAL IN CONCRETE GAP.
11. REMOVE EXISTING CABLE(S) FROM TRANSFORMER TO DISCONNECTS AND REPLACE WITH NEW 3/O AWG CABLE FROM TRANSFORMER TO PDB WITH NEW 6 AWG CABLES FROM DISCONNECTS TO PDB LOCATED IN NEW CT/VT PANEL.
12. PROVIDE 2-#12 AWG TAPPED TO PDB IN NEW CT/VT PANEL AND CONNECT TO VT MOUNTED IN NEW CT/VT PANEL.
13. EXISTING LIGHTING CIRCUITS LOCATED UNDERGROUND IN CROSS HATCH.
14. REFERENCE LATEST AVAILABLE UNDERGROUND DRAWINGS. CONTRACTOR TO IDENTIFY ALL UNDERGROUND UTILITIES PRIOR TO WORK ON THIS DRAWING.

NO.	BY	DATE	DESCRIPTION

REVISIONS

STREET LIGHTING MASTER CONTROL
SCADA SYSTEM
PHASE 3

T-44N SITE
ELECTRICAL LAYOUT DRAWING

Westin
WESTIN ENGINEERING, INC.
303 W. MADISON STREET, SUITE 1110
CHICAGO, IL 60606

CITY OF MILWAUKEE

DEPARTMENT OF PUBLIC WORKS

DRAWN BY:	J. JACKSON	SHEET NO.:	15 OF 26
CHECKED BY:	J. MIRABELLA	DRAWING NO.:	ES-10
APPROVED BY:	B. BIEHL		
DATE:	11/02/2012		
SCALE:		SIZE:	11"x17"
CONTRACT NO.:		PROJECT NO.:	7434

1 ES-11 T-28N SITE PLAN
NTS

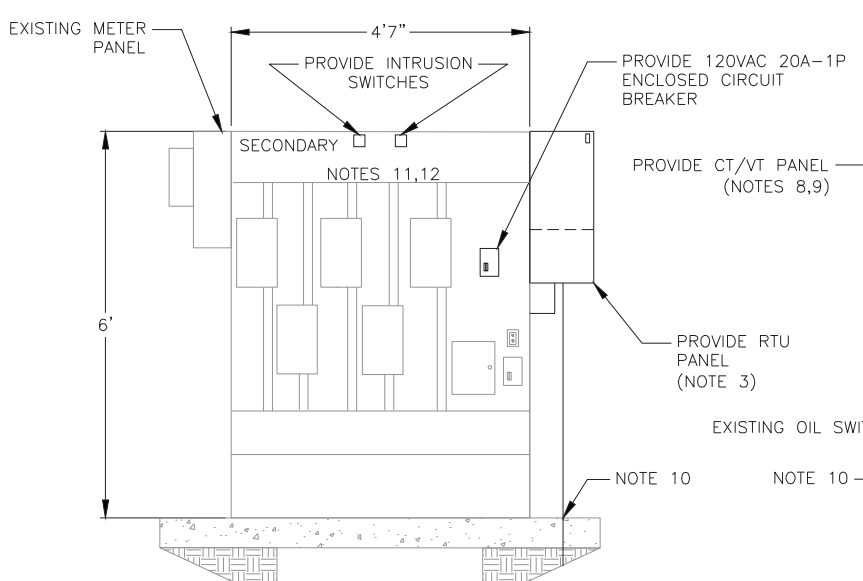

2 ES-11 EXISTING TRANSCLOSURE SOUTHWEST ELEVATION
NTS

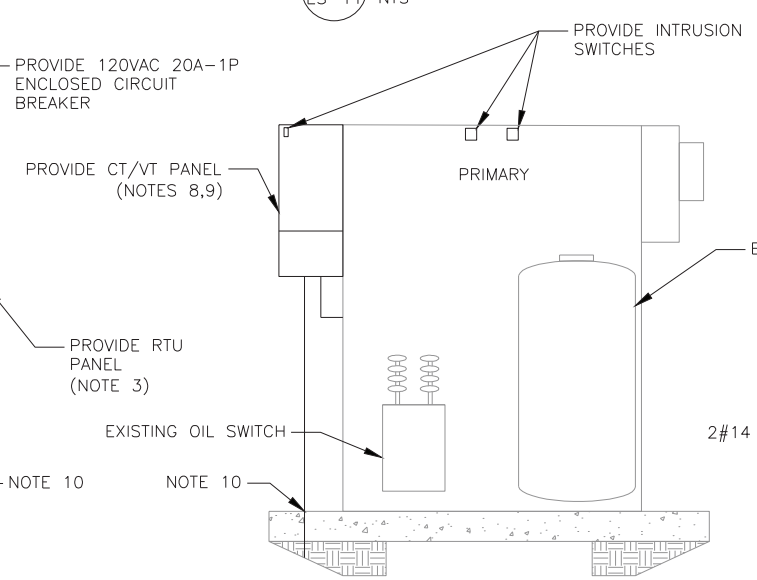

3 ES-11 EXISTING TRANSCLOSURE NORTHEAST ELEVATION
NTS

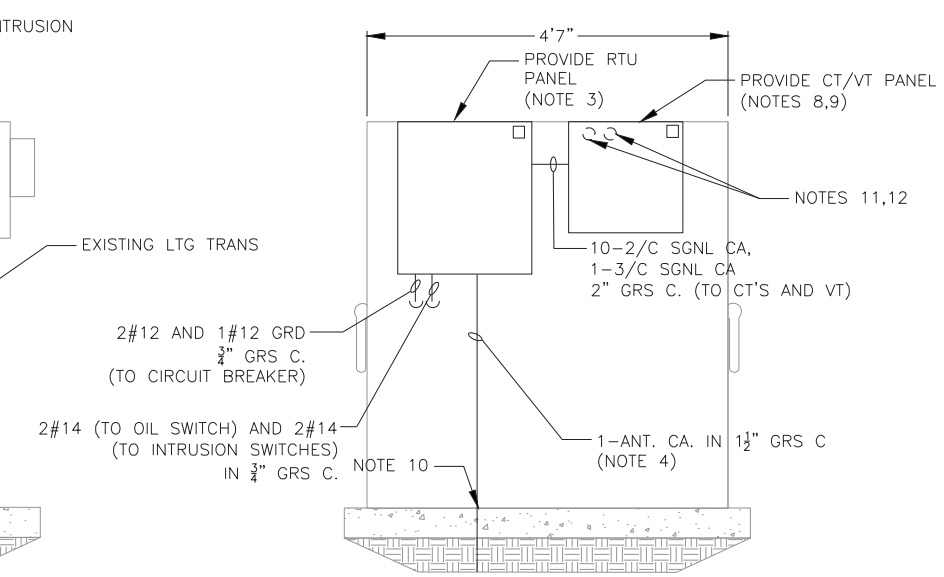

4 ES-11 EXISTING TRANSCLOSURE SOUTHEAST ELEVATION
NTS

NOTES:

1. EXISTING DOUBLE-SIDED SINGLE DOOR TRANSCLOSURE MOUNTED ON CONCRETE PAD.
2. MOUNT NEW ANTENNA ON EXISTING 31' CONCRETE LIGHT POLE.
3. REFER TO DRAWING ED-03 FOR INSTALLATION DETAILS.
4. REFER TO DRAWING ED-01 FOR ANTENNA MOUNTING DETAIL.
5. REFER TO DRAWING ED-07 FOR CONDUIT DETAIL.
6. REMOVE LOCAL CONTROL PANEL.
7. HATCH AREAS INDICATE GRASS AREAS TO BE REPAIRED BACK TO ORIGINAL CONDITION.
8. T-28N HAS TEN MULTIPLE CIRCUITS IN SERVICE AND ONE MAIN FEED. PROVIDE ONE CT FOR EACH CIRCUIT AND ONE VT FOR THE MAIN FEED.
9. REFER TO DRAWING ED-06 FOR CT/VT MOUNTING DETAILS.
10. PROVIDE CORE THROUGH EXISTING CONCRETE PAD AS CLOSE AS POSSIBLE TO ENCLOSURE FACE. ROUTE RACEWAY ADJACENT TO ENCLOSURE STRAIGHT THRU CORED HOLE. PROVIDE CAULK SEAL IN CONCRETE GAP.
11. REMOVE EXISTING CABLE(S) FROM TRANSFORMER TO DISCONNECTS AND REPLACE WITH NEW 3/0 AWG CABLE FROM TRANSFORMER TO PDB WITH NEW 6 AWG CABLES FROM DISCONNECTS TO PDB LOCATED IN NEW CT/VT PANEL.
12. PROVIDE 2-#12 AWG TAPPED TO PDB IN NEW CT/VT PANEL AND CONNECT TO VT MOUNTED IN NEW CT/VT PANEL.
13. CONTRACTOR TO IDENTIFY ALL UNDERGROUND UTILITIES PRIOR TO WORK ON THIS DRAWING.

NO.	BY	DATE	DESCRIPTION

REVISIONS

STREET LIGHTING MASTER CONTROL
SCADA SYSTEM
PHASE 3

T-28N SITE
ELECTRICAL LAYOUT DRAWING

Westin
WESTIN ENGINEERING, INC.
303 W. MADISON STREET, SUITE 1110
CHICAGO, IL 60606

CITY OF MILWAUKEE

DEPARTMENT OF PUBLIC WORKS

DRAWN BY:	J. JACKSON	SHEET NO.: 16 OF 26	
CHECKED BY:	J. MIRABELLA	DRAWING NO.: ES-11	
APPROVED BY:	B. BIEHL		
DATE:	11/02/2012		
SCALE:		SIZE:	11"x17"
CONTRACT NO.:		PROJECT NO.:	7434

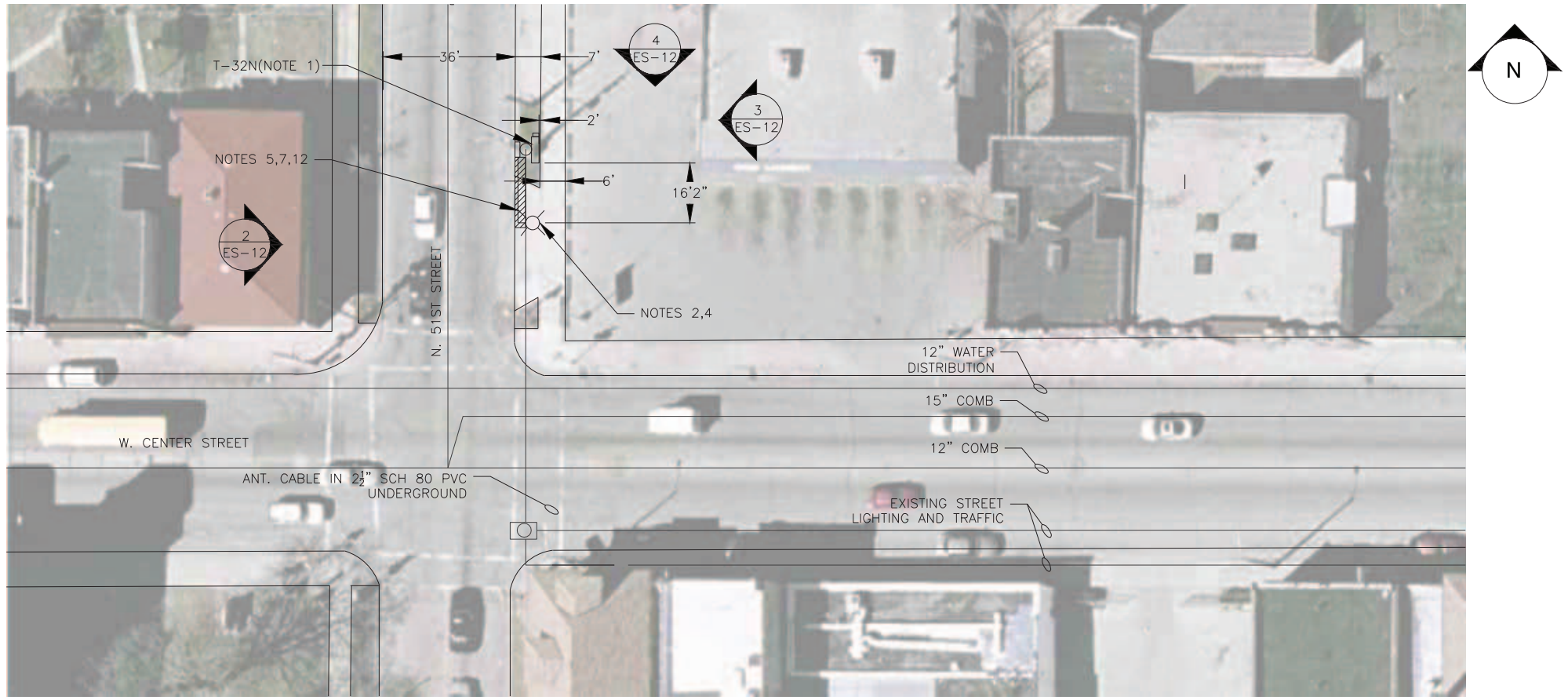

1 ES-12 T-32N SITE PLAN
NTS

NOTES:

1. EXISTING LIGHTING CONTROLLER MOUNTED TO WOOD LIGHT POLE.
2. MOUNT NEW ANTENNA ON NEW LIGHT POLE. MPW TO INSTALL NEW POLE.
3. REFER TO DETAIL 2 ON DRAWING ED-04 FOR INSTALLATION DETAILS.
4. REFER TO DRAWING ED-01 FOR ANTENNA MOUNTING DETAIL.
5. REFER TO DRAWING ED-07 FOR CONDUIT DETAIL.
6. REMOVE LOCAL CONTROL PANEL.
7. HATCH AREA INDICATE AREAS TO REMOVE AND REPLACE PAVEMENT, SIDEWALK, AND/OR GRASS AREAS BACK TO ORIGINAL CONDITION.
8. T-32N HAS EIGHT MULTIPLE CIRCUITS IN SERVICE AND ONE MAIN FEED. PROVIDE ONE CT FOR EACH CIRCUIT AND ONE VT FOR THE MAIN FEED.
9. REFER TO DRAWING ED-06 FOR CT/VT MOUNTING DETAILS.
10. REMOVE EXISTING CABLE(S) FROM TRANSFORMER TO DISCONNECTS AND REPLACE WITH NEW 3/O AWG CABLE FROM TRANSFORMER TO PDB WITH NEW 6 AWG CABLES FROM DISCONNECTS TO PDB LOCATED IN NEW CT/VT PANEL.
11. PROVIDE 2-#12 AWG TAPPED TO PDB IN NEW CT/VT PANEL AND CONNECT TO VT MOUNTED IN NEW CT/VT PANEL.
12. EXISTING LIGHTING AND TRAFFIC CIRCUITS LOCATED UNDERGROUND IN CROSS HATCH.
13. CONTRACTOR TO IDENTIFY ALL UNDERGROUND UTILITIES PRIOR TO WORK ON THIS DRAWING.

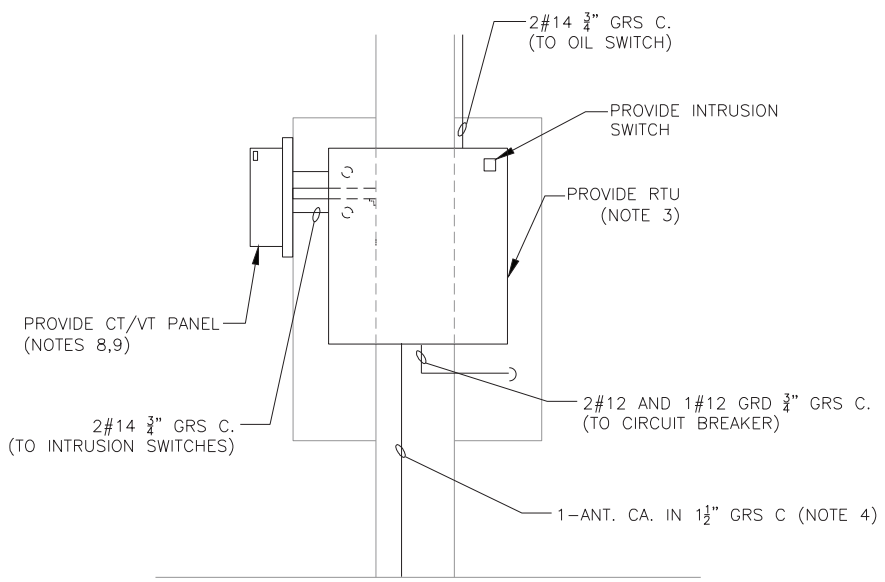

2 ES-12 EXISTING POLE MOUNT TRANSCLOSURE WEST ELEVATION
NTS

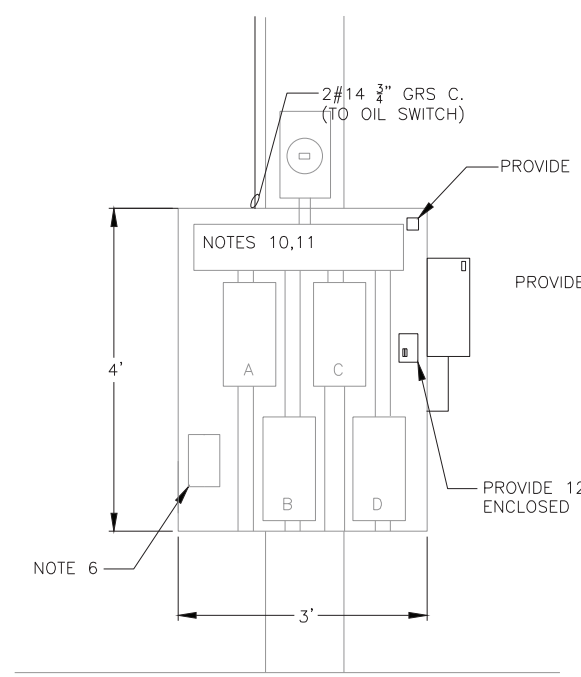

3 ES-12 EXISTING POLE MOUNT TRANSCLOSURE EAST ELEVATION
NTS

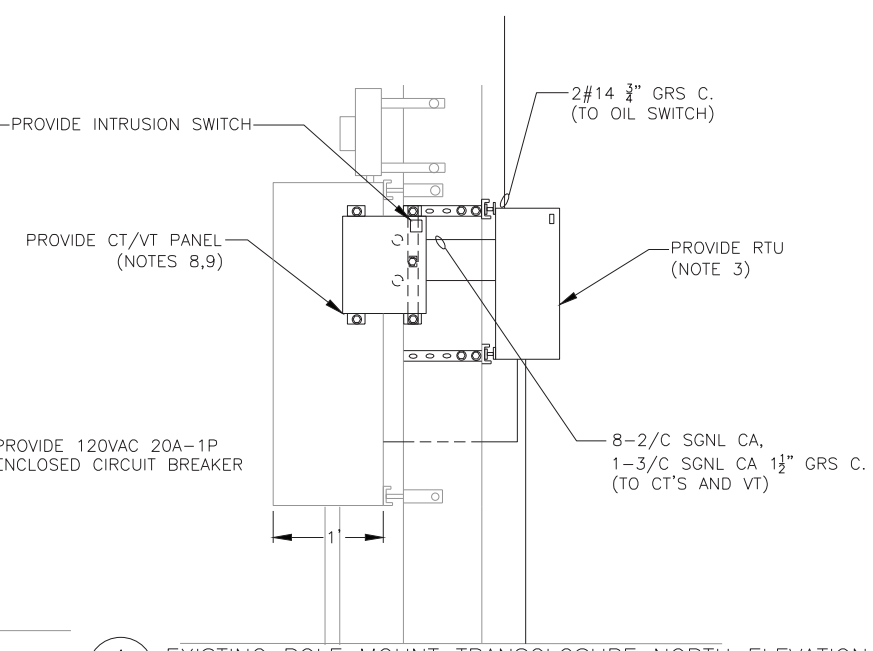

4 ES-12 EXISTING POLE MOUNT TRANSCLOSURE NORTH ELEVATION
NTS

NO.	BY	DATE	DESCRIPTION

REVISIONS

STREET LIGHTING MASTER CONTROL
SCADA SYSTEM
PHASE 3

T-32N SITE
ELECTRICAL LAYOUT DRAWING

Westin
WESTIN ENGINEERING, INC.
303 W. MADISON STREET, SUITE 1110
CHICAGO, IL 60606

CITY OF MILWAUKEE

DEPARTMENT OF PUBLIC WORKS

DRAWN BY:	J. JACKSON	SHEET NO.:	17 OF 26
CHECKED BY:	J. MIRABELLA	DRAWING NO.:	ES-12
APPROVED BY:	B. BIEHL		
DATE:	11/02/2012		
SCALE:		SIZE:	11"x17"
CONTRACT NO.:		PROJECT NO.:	7434

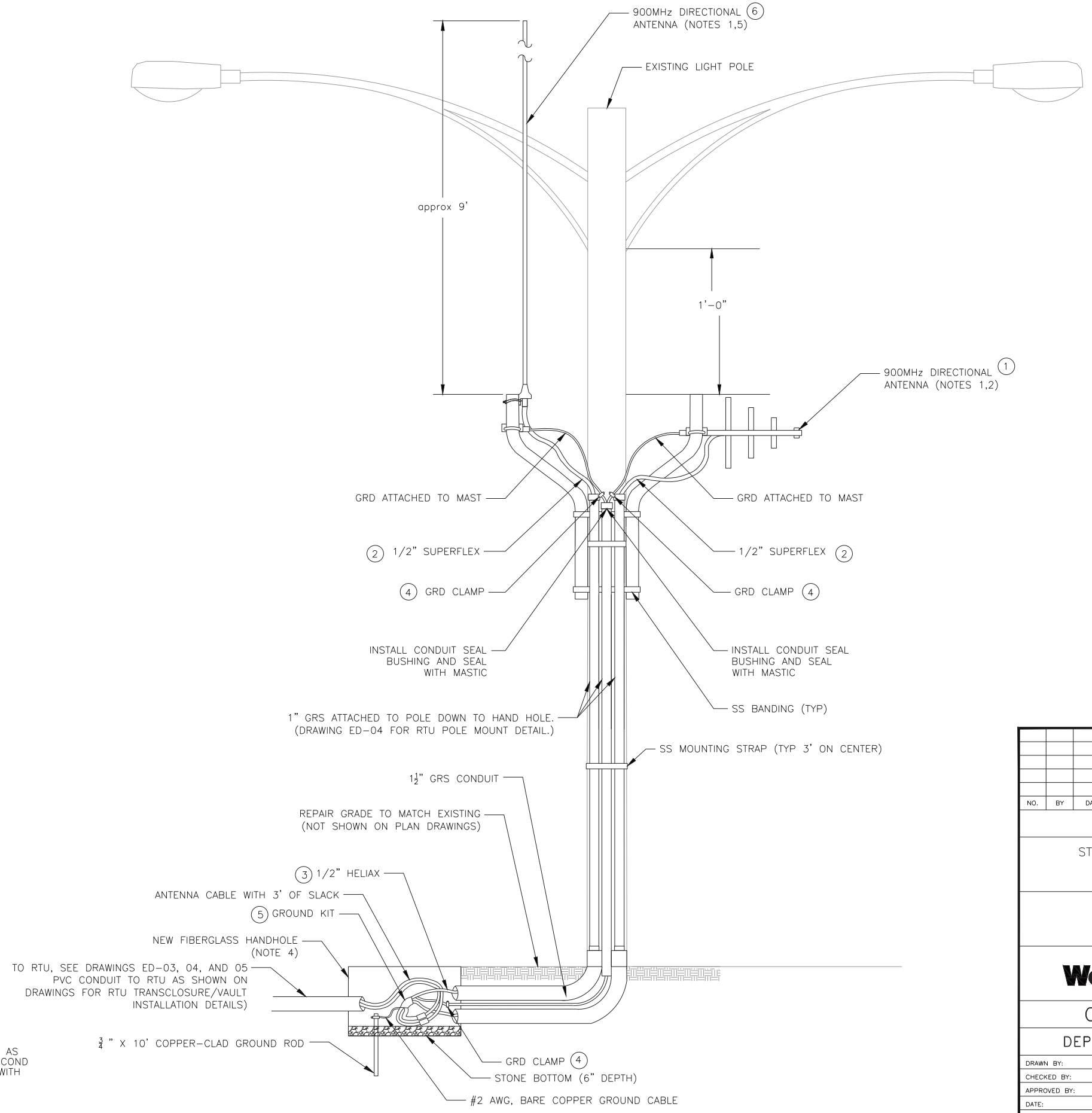

ITEM#	MANUFACTURER	PART#
(1)	SCALA	TY-900
(2)	ANDREW	FSJ4-50B
(3)	ANDREW	LDF4-50A
(4)	HARGER	UPC1.5/2
(5)	ANDREW	204989-1
(6)	ANDREW	DB589Y

NOTES:

1. THE CONECTION BETWEEN THE ANTENNA AND THE 1/2" SUPERFLEX SHALL BE WRAPPED WITH A WEATHER PROOFING KIT, POLYPHASER WK-1 TO PROVIDE A WEATHER-TIGHT SEAL.
2. ANTENNA SHALL BE SCALA TY-900 YAGI ANTENNA FOR USE WITH MDS POINT-TO-MULTIPOINT RADIO.
3. NO LIQUID FLEXIBLE CONDUIT IS TO BE USED FOR CONSTRUCTION. IF NEEDED, A WRITTEN APPROVAL IS REQUIRED FROM OWNER.
4. LOCATE THE HANDHOLE NO MORE THAN 6 FEET FROM LIGHT POLE
5. WHERE OMNI DIRECTION ANTENNA IS REQUIRED FOR SITES UTILIZED AS A REPEATER SITE, PROVIDE SECOND ANTENNA AND RADIO. THE SECOND ANTENNA SHALL BE ANDREW DB589Y OMNI DIRECTIONAL FOR USE WITH MDS MULTI AND POINT TO POINT RADIO.

NO.	BY	DATE	DESCRIPTION

REVISIONS

STREET LIGHTING MASTER CONTROL
SCADA SYSTEM
PHASE 3

ANTENNA INSTALLATION DETAIL
LIGHT POLE MOUNT

Westin

WESTIN ENGINEERING, INC.
303 W. MADISON STREET, SUITE 1110
CHICAGO, IL 60606

CITY OF MILWAUKEE

DEPARTMENT OF PUBLIC WORKS

DRAWN BY:	J. JACKSON	SHEET NO.: 18 OF 26	
CHECKED BY:	J. MIRABELLA	DRAWING NO.: ED-01	
APPROVED BY:	B. BIEHL		
DATE:	11/02/2012		
SCALE:		SIZE:	11"x17"
CONTRACT NO.:		PROJECT NO.:	7434

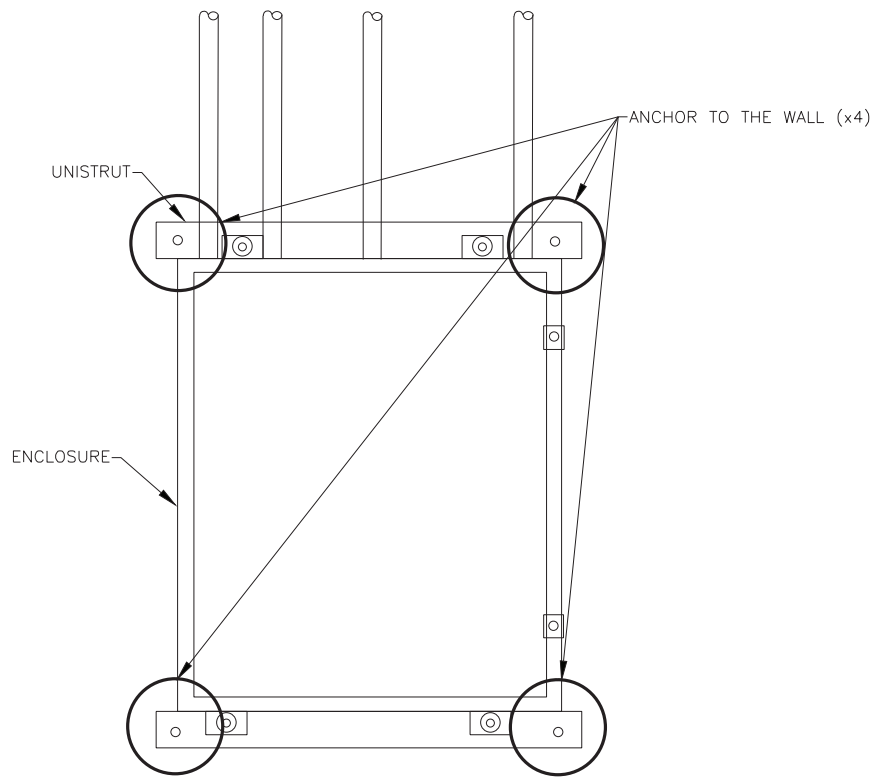

1 RTU WALL MOUNT
NTS

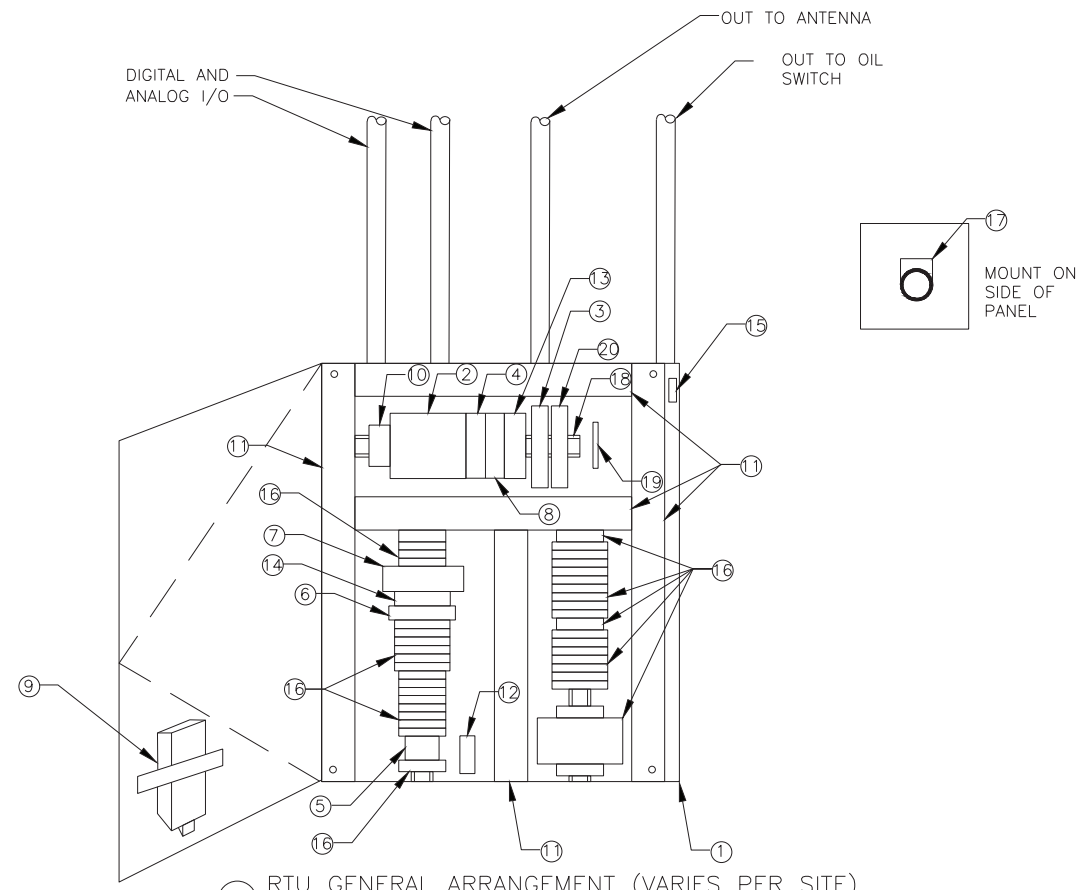

2 RTU GENERAL ARRANGEMENT (VARIES PER SITE)
NTS

ITEM#	DESCRIPTION	QUANTITY
1	ENCLOSURE	1
2	PLC	1
3	RADIO	1
4	ANALOG INPUT CARDS	A/R
5	RELAYS	A/R
6	CIRCUIT BREAKER	1
7	POWER SUPPLY	1
8	DIGITAL INPUT CARDS	A/R
9	HEATER	1
10	THERMOSTAT	1
11	WIREWAY	A/R
12	ANTENNA SURGE SUPPRESOR	1
13	ETHERNET SWITCH	1
14	120VAC SURGE SUPPRESOR	1
15	DOOR SWITCH	1
16	TERMINAL BLOCKS	A/R
17	SELECTOR SWITCH	1
18	DIN RAIL	A/R
19	GROUND BAR	1
20	RADIO (AS REQUIRED AT SITES HAVING (2) ANTENNAS)	1

NO.	BY	DATE	DESCRIPTION

REVISIONS

STREET LIGHTING MASTER CONTROL
SCADA SYSTEM
PHASE 3

RTU WALL MOUNT
INSTALLATION DETAIL

Westin

WESTIN ENGINEERING, INC.
303 W. MADISON STREET, SUITE 1110
CHICAGO, IL 60606

CITY OF MILWAUKEE

DEPARTMENT OF PUBLIC WORKS

DRAWN BY:	J. JACKSON	SHEET NO.:	19 OF 26
CHECKED BY:	J. MIRABELLA	DRAWING NO.:	ED-02
APPROVED BY:	B. BIEHL		
DATE:	11/02/2012		
SCALE:		SIZE:	11"x17"
CONTRACT NO.:		PROJECT NO.:	7434

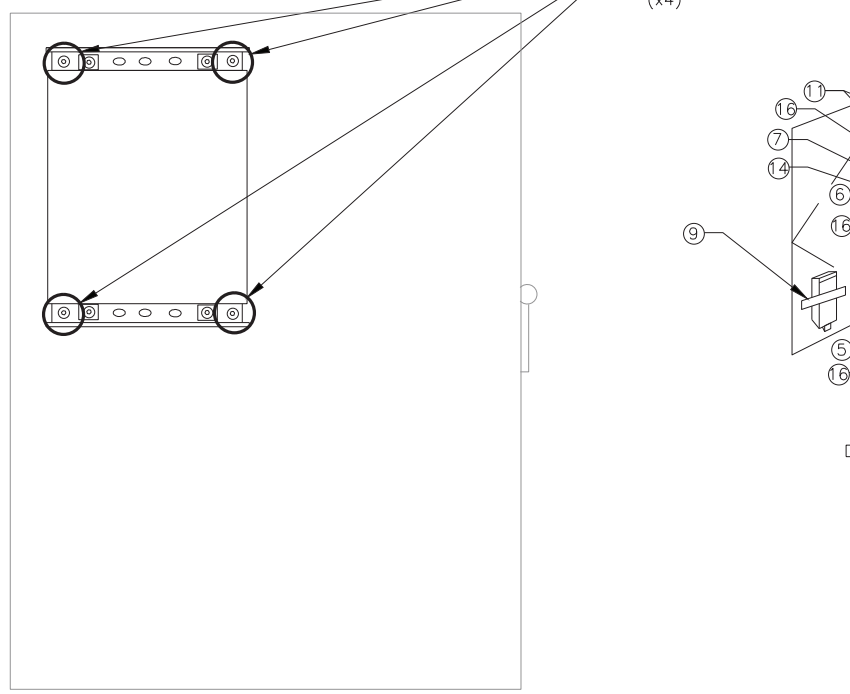

2 RTU TRANSCLOSURE MOUNT
NTS

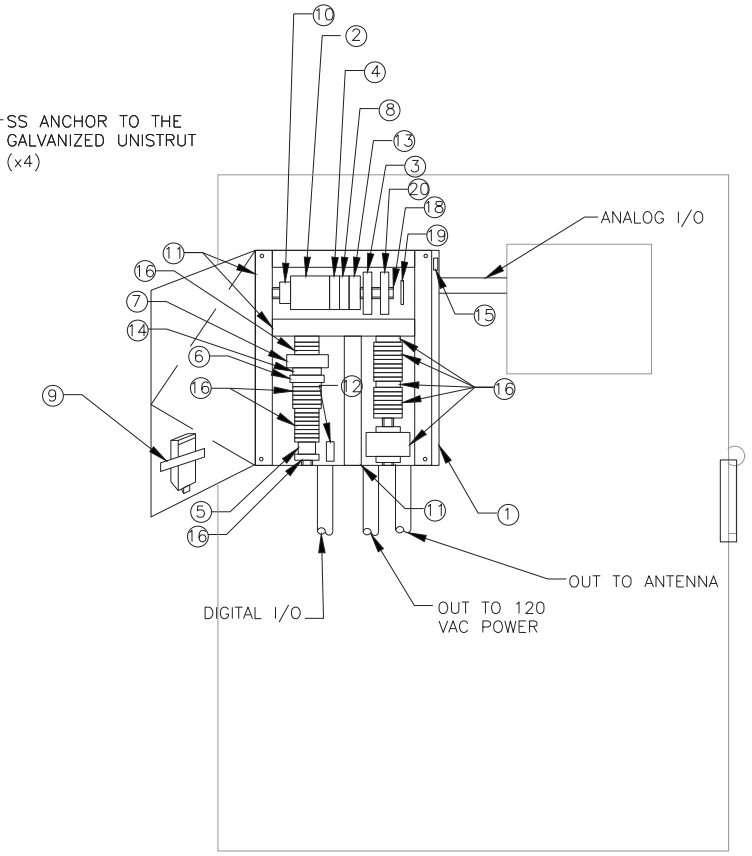

3 RTU GENERAL ARRANGEMENT (VARIES PER SITE)
NTS

ITEM#	DESCRIPTION	QUANTITY
1	ENCLOSURE	1
2	PLC	1
3	RADIO	1
4	ANALOG INPUT CARDS	A/R
5	RELAYS	A/R
6	CIRCUIT BREAKER	1
7	POWER SUPPLY	1
8	DIGITAL INPUT CARDS	A/R
9	HEATER	1
10	THERMOSTAT	1
11	WIREWAY	A/R
12	ANTENNA SURGE SUPPRESOR	1
13	ETHERNET SWITCH	1
14	120VAC SURGE SUPPRESOR	1
15	DOOR SWITCH	1
16	TERMINAL BLOCKS	A/R
17	SELECTOR SWITCH	1
18	DIN RAIL	A/R
19	GROUND BAR	1
20	RADIO (AS REQUIRED AT SITES HAVING (2) ANTENNAS)	1

NOTES:

1. LOCATE THE HANDHOLE NO MORE THAN 6 FEET FROM TRANSCLOSURE

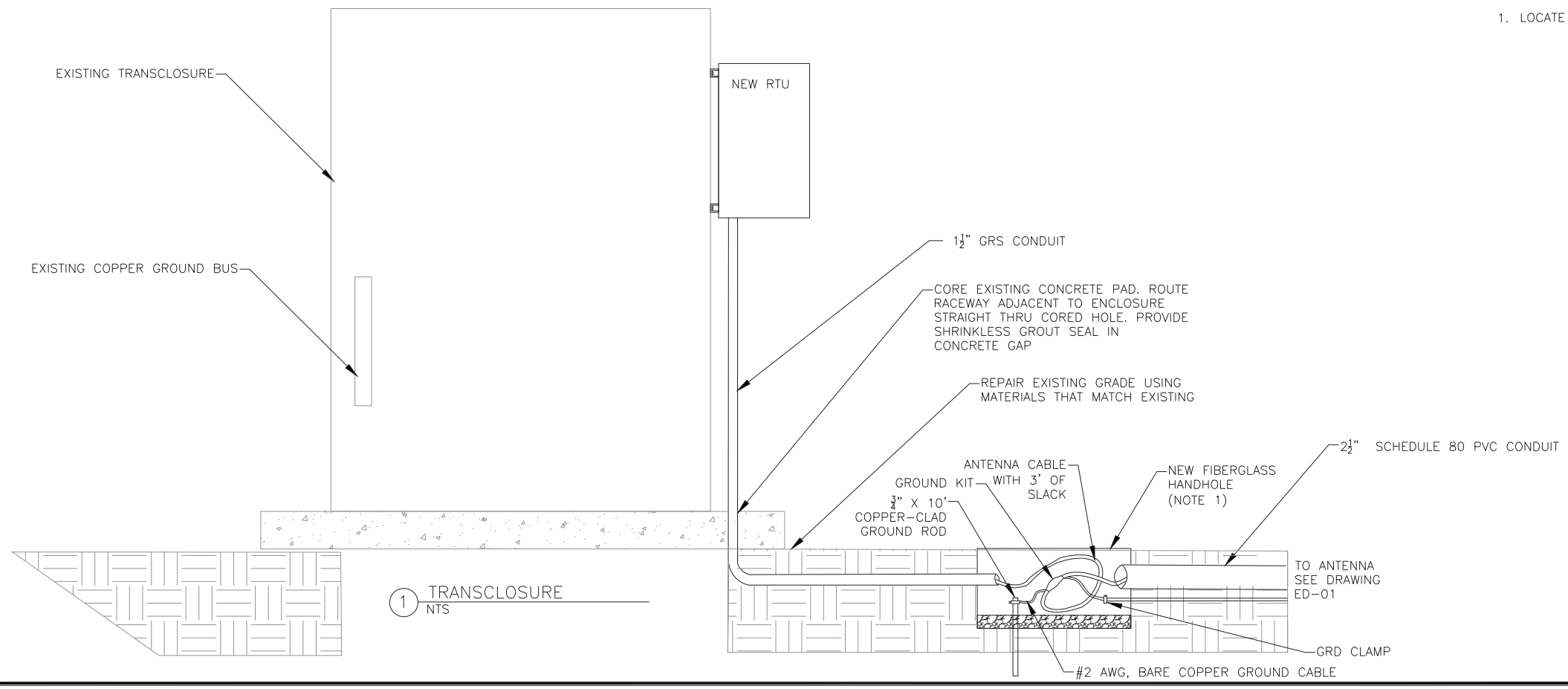

1 TRANSCLOSURE
NTS

NO.	BY	DATE	DESCRIPTION

REVISIONS

STREET LIGHTING MASTER CONTROL
SCADA SYSTEM
PHASE 3

RTU TRANSCLOSURE MOUNT
INSTALLATION DETAIL

Westin

WESTIN ENGINEERING, INC.
303 W. MADISON STREET, SUITE 1110
CHICAGO, IL 60606

CITY OF MILWAUKEE

DEPARTMENT OF PUBLIC WORKS

DRAWN BY:	J. JACKSON	SHEET NO.:	20 OF 26
CHECKED BY:	J. MIRABELLA	DRAWING NO.:	ED-03
APPROVED BY:	B. BIEHL		
DATE:	11/02/2012		
SCALE:		SIZE:	11"x17"
CONTRACT NO.:		PROJECT NO.:	7434

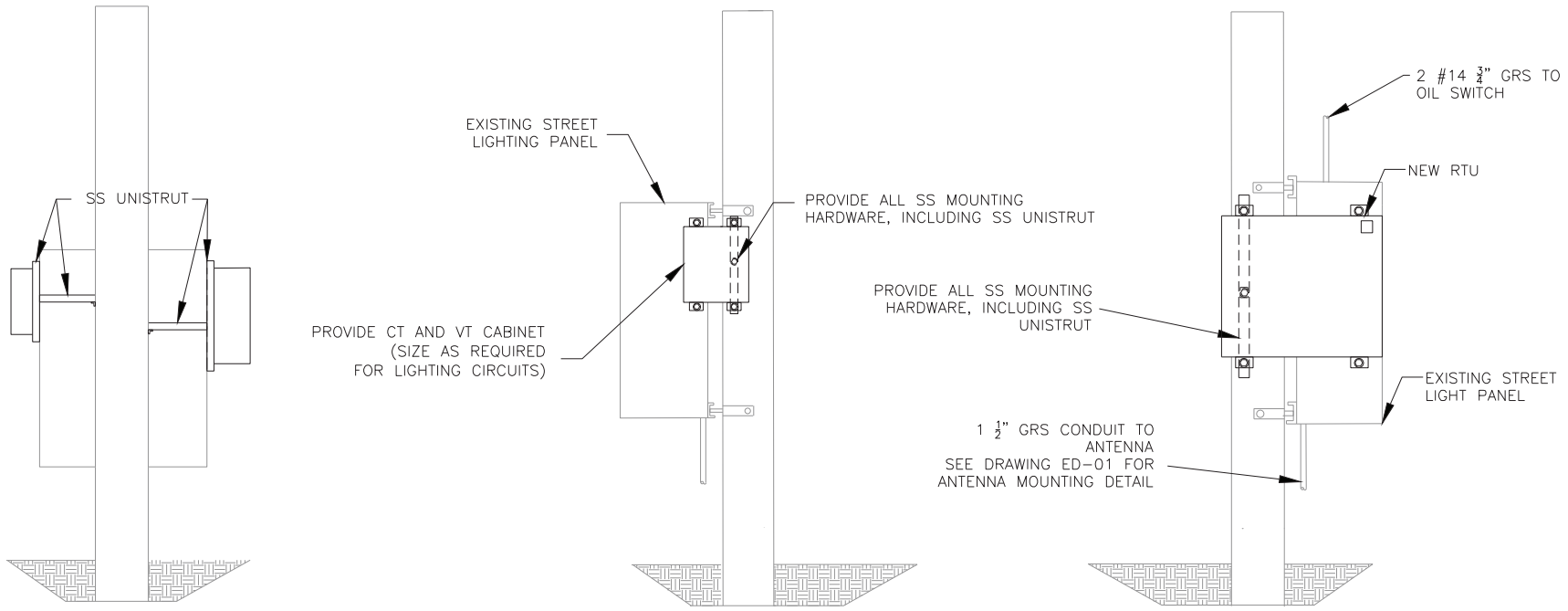

1 POLE MOUNTED RTU 1
NTS

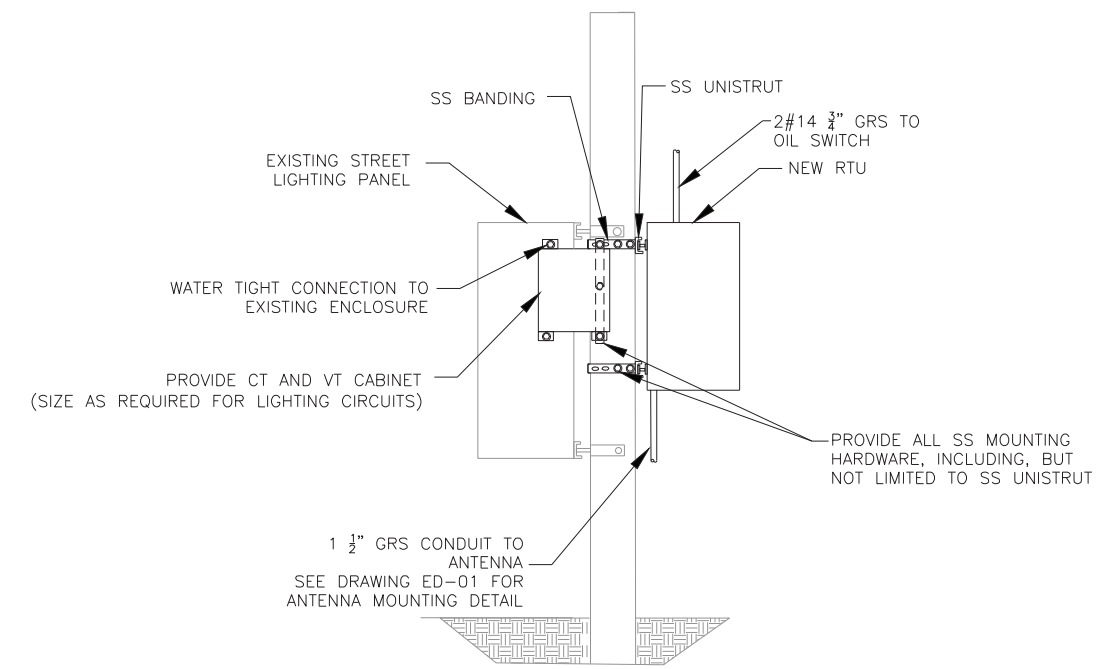

2 POLE MOUNTED RTU 2
NTS

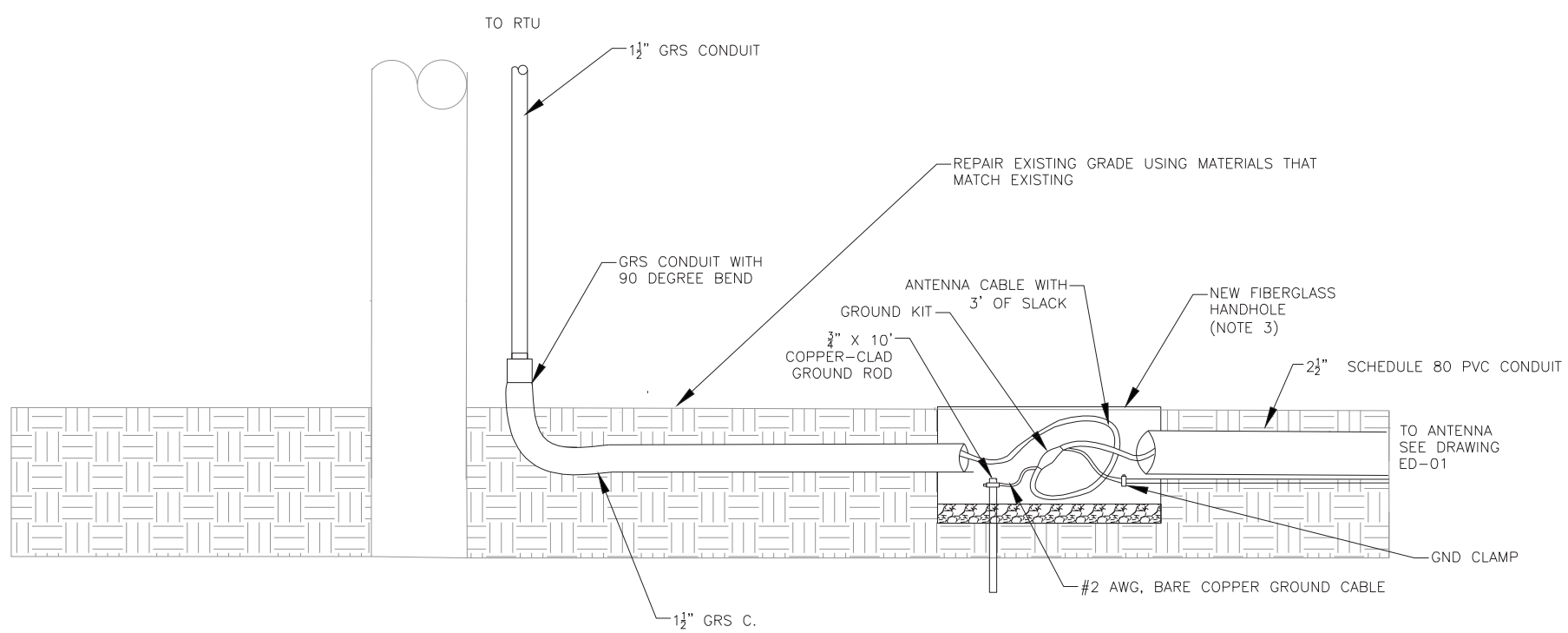

3 CONDUIT RISER DETAIL
NTS

CONDUIT RISER DETAIL NOTES

1. ANTENNA RACEWAY: PROVIDE 1½" GRS CONDUIT RISER FROM HANDHOLE UP ALONG POLE. TRANSITION FROM 1½" GRS TO 1" GRS UP TO ANTENNA.
2. EQUIPMENT GROUNDING CONDUCTOR: PROVIDE 1" GRS CONDUIT RISER FROM HANDHOLE TO ANTENNA. INSTALL #2AWG BARE CONDUCTOR
3. LOCATE THE HANDHOLE NO MORE THAN 6 FEET FROM TRANSCLOSURE

NO.	BY	DATE	DESCRIPTION

REVISIONS

STREET LIGHTING MASTER CONTROL
SCADA SYSTEM
PHASE 3

RTU POLE MOUNT DETAIL

Westin
WESTIN ENGINEERING, INC.
303 W. MADISON STREET, SUITE 1110
CHICAGO, IL 60606

CITY OF MILWAUKEE

DEPARTMENT OF PUBLIC WORKS

DRAWN BY:	J. JACKSON	SHEET NO.:	21 OF 26
CHECKED BY:	J. MIRABELLA	DRAWING NO.:	ED-04
APPROVED BY:	B. BIEHL		
DATE:	11/02/2012		
SCALE:		SIZE:	11"x17"
CONTRACT NO.:		PROJECT NO.:	7434

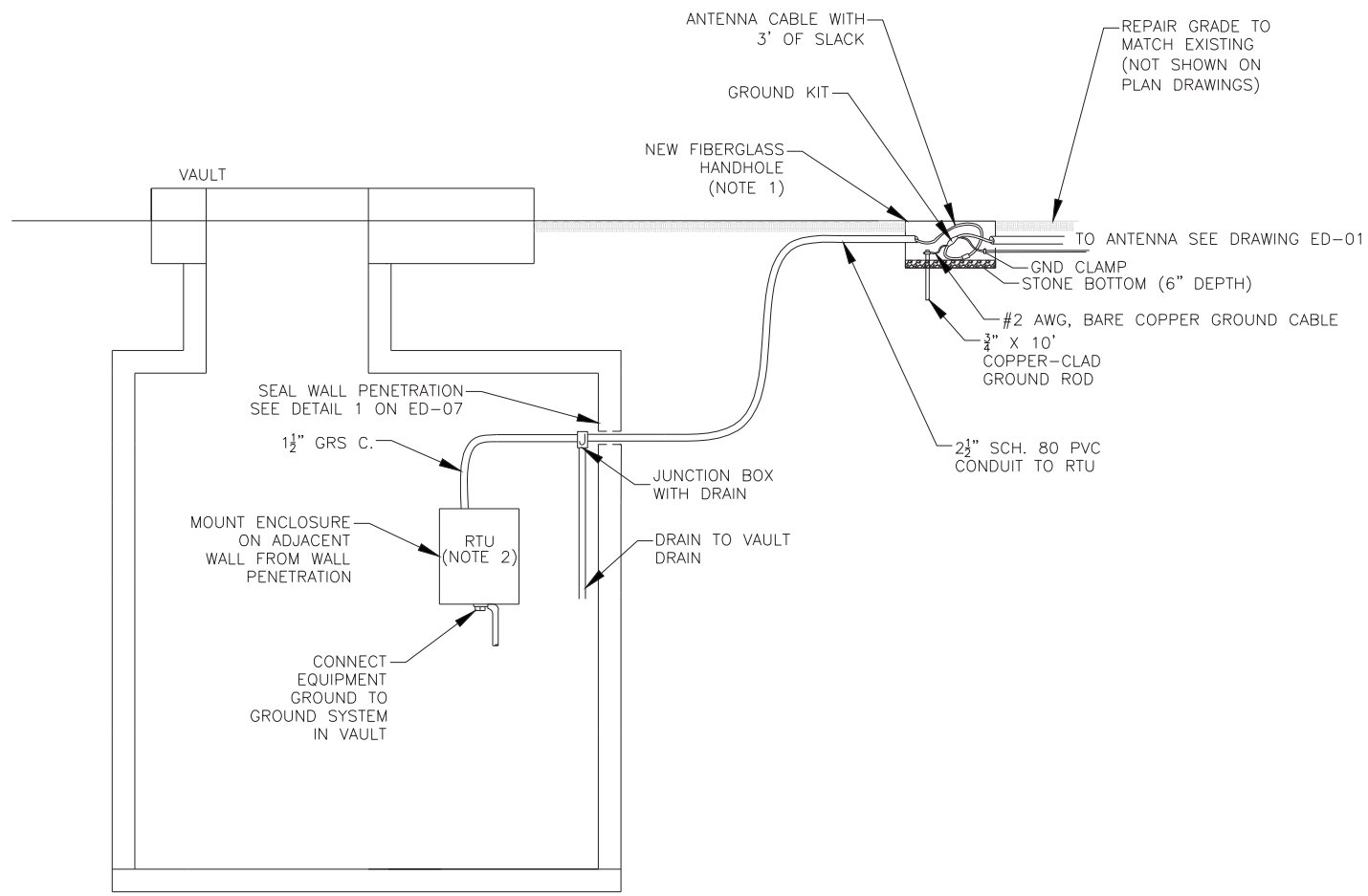

1 UNDERGROUND VAULT
NTS

NOTES:

1. LOCATE THE HANDHOLE NO MORE THAN 6 FEET FROM UNDERGROUND VAULT

NO.	BY	DATE	DESCRIPTION

REVISIONS

STREET LIGHTING MASTER CONTROL
SCADA SYSTEM
PHASE 3

RTU VAULT INSTALLATION DETAIL

Westin

WESTIN ENGINEERING, INC.
303 W. MADISON STREET, SUITE 1110
CHICAGO, IL 60606

CITY OF MILWAUKEE

DEPARTMENT OF PUBLIC WORKS

DRAWN BY:	J. JACKSON	SHEET NO.:	22 OF 26
CHECKED BY:	J. MIRABELLA	DRAWING NO.:	ED-05
APPROVED BY:	B. BIEHL		
DATE:	11/02/2012		
SCALE:		SIZE:	11"x17"
CONTRACT NO.:		PROJECT NO.:	7434

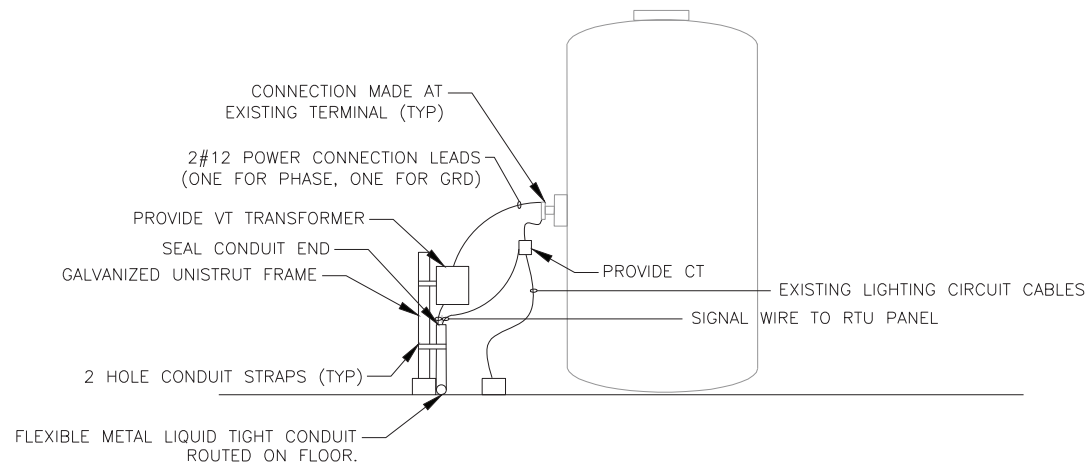

1 CT AND VT TRANSFORMER MOUNT
NTS

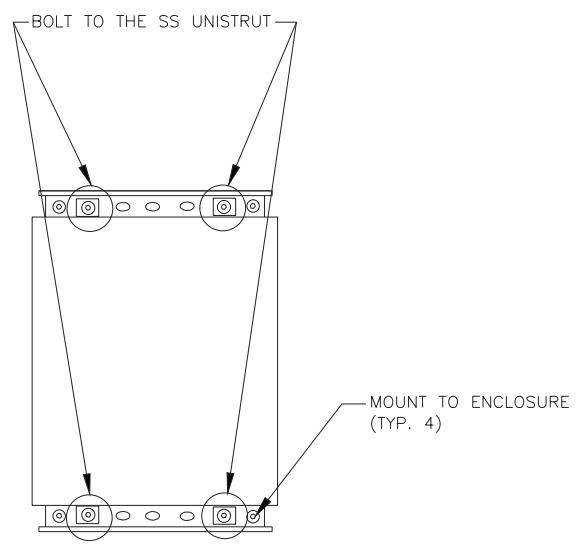

2 CT AND VT PANEL MOUNT INSTALLATION
NTS

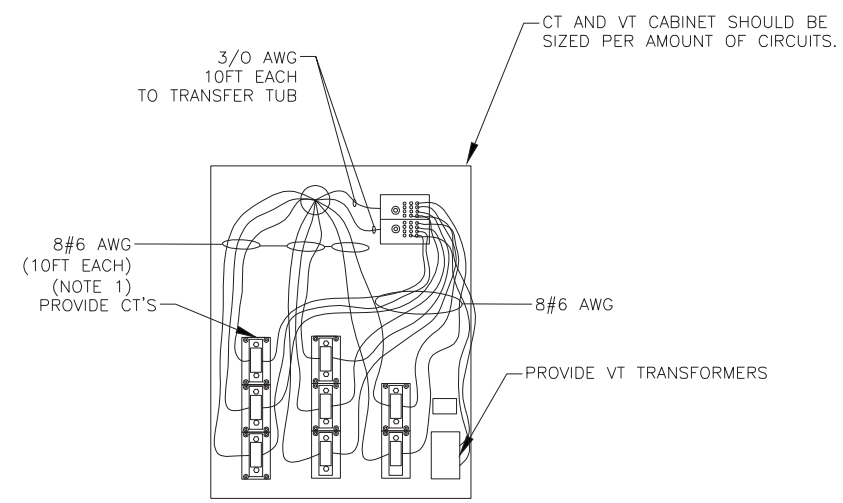

3 CT AND VT PANEL GENERAL ARRANGMENT (VARIES PER SITE)
NTS

NOTES:

1. PROVIDE ONE #6 AWG CABLE FOR EACH LIGHTING CIRCUIT. REFER TO EACH SITE FOR REQUIRED CIRCUITS.
2. PROVIDE 2 3/O AWG CABLE FROM THE PDB TO THE TRANSFORMER.
3. PROVIDE 2 #12 AWG.

NO.	BY	DATE	DESCRIPTION

REVISIONS

STREET LIGHTING MASTER CONTROL
SCADA SYSTEM
PHASE 3

CT AND VT INSTALLATION DETAILS

Westin

WESTIN ENGINEERING, INC.
303 W. MADISON STREET, SUITE 1110
CHICAGO, IL 60606

CITY OF MILWAUKEE

DEPARTMENT OF PUBLIC WORKS

DRAWN BY:	J. JACKSON	SHEET NO.:	23 OF 26
CHECKED BY:	J. MIRABELLA	DRAWING NO.:	ED-06
APPROVED BY:	B. BIEHL		
DATE:	11/02/2012		
SCALE:		SIZE:	11"x17"
CONTRACT NO.:		PROJECT NO.:	7434

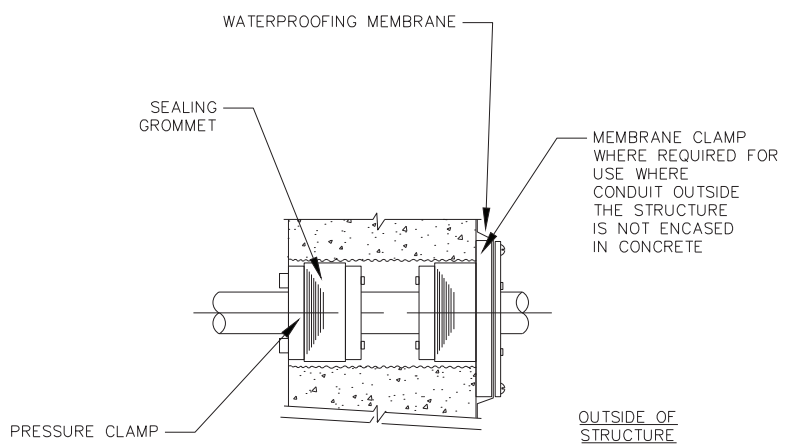

1 TYPICAL CONDUIT SEAL DETAIL
NTS

*THIS IS TYPICAL FOR BELOW GRADE APPLICATIONS

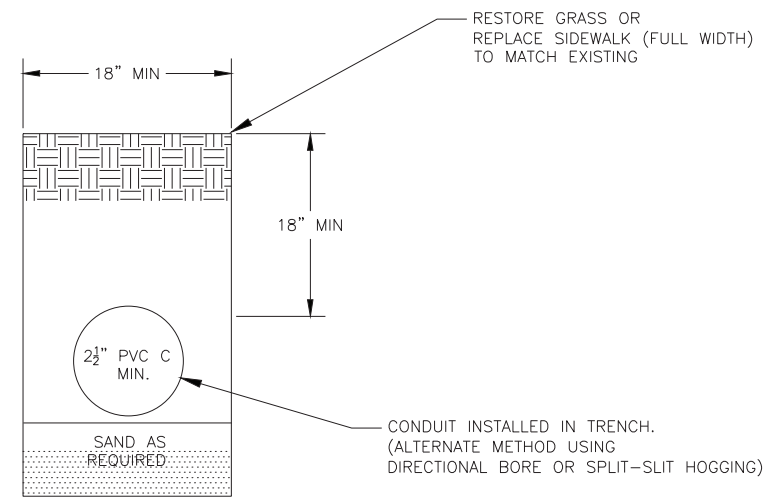

2 DIRECT BURIED CONDUIT DETAIL
NTS

NO.	BY	DATE	DESCRIPTION

REVISIONS

STREET LIGHTING MASTER CONTROL
SCADA SYSTEM
PHASE 3

ELECTRICAL DETAILS

Westin

WESTIN ENGINEERING, INC.
303 W. MADISON STREET, SUITE 1110
CHICAGO, IL 60606

CITY OF MILWAUKEE

DEPARTMENT OF PUBLIC WORKS

DRAWN BY:	J. JACKSON	SHEET NO.:	24 OF 26
CHECKED BY:	J. MIRABELLA	DRAWING NO.:	ED-07
APPROVED BY:	B. BIEHL		
DATE:	11/02/2012		
SCALE:		SIZE:	11"x17"
CONTRACT NO.:		PROJECT NO.:	7434

ITEM#	MANUFACTURER	PART#
1	ANDREW	DB589Y
2	ANDREW	F4NM
3	ANDREW	FSJ4-50B
4	HARGER	UPC 1.5/2
5	POLYPHASER	IS-50NX-C2
6	ANDREW	204989-1

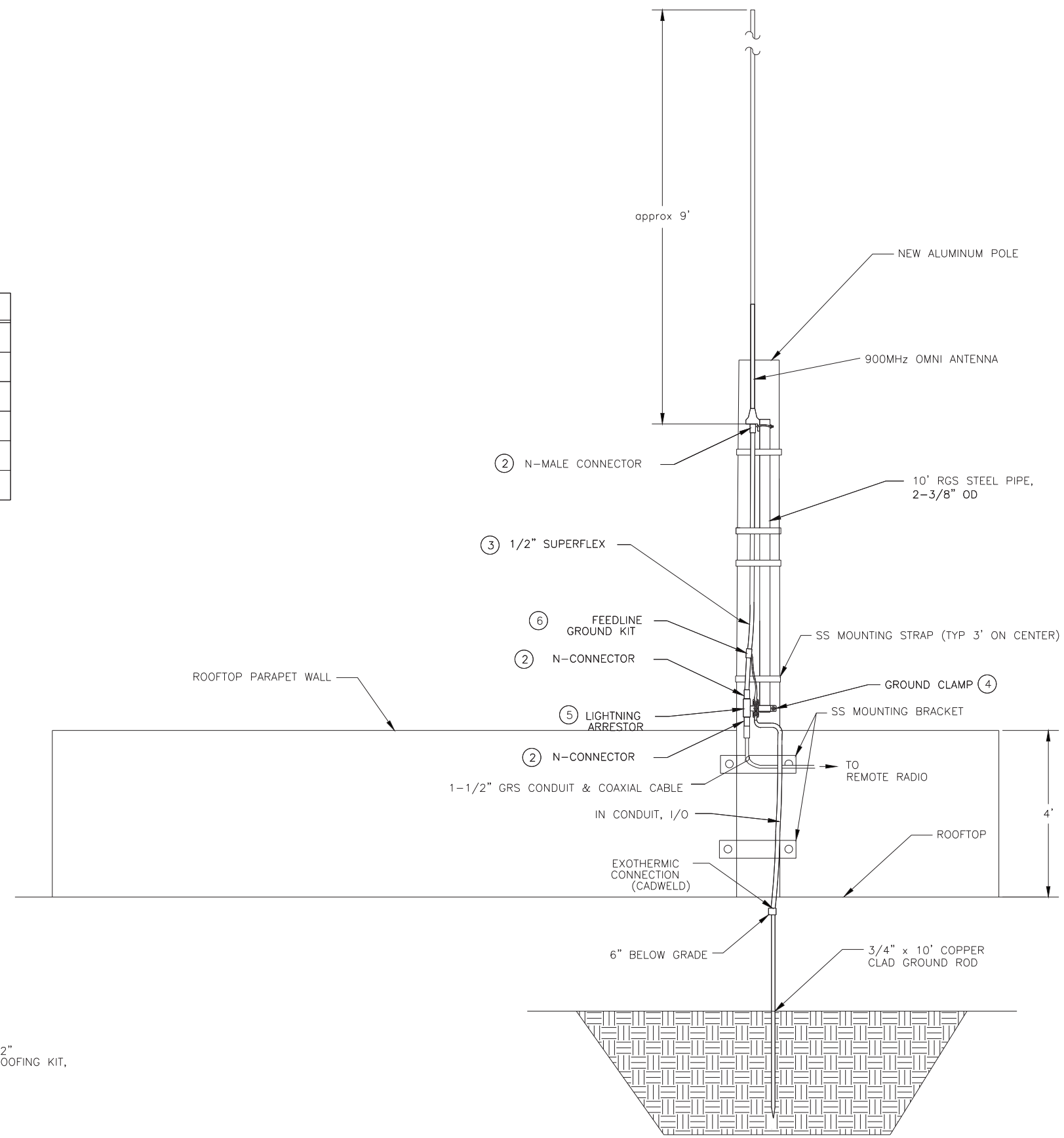

NOTES:

1. THE CONECTION BETWEEN THE ANTENNA AND THE 1/2" SUPERFLEX SHALL BE WRAPPED WITH A WEATHER PROOFING KIT, POLYPHASER WK-1 TO PROVIDE A WEATHER-TIGHT SEAL.

NO.	BY	DATE	DESCRIPTION

REVISIONS

STREET LIGHTING MASTER CONTROL
SCADA SYSTEM
PHASE 3

ANTENNA ROOFTOP
INSTALLATION DETAIL

Westin

WESTIN ENGINEERING, INC.
303 W. MADISON STREET, SUITE 1110
CHICAGO, IL 60606

CITY OF MILWAUKEE

DEPARTMENT OF PUBLIC WORKS

DRAWN BY:	J. JACKSON	SHEET NO.:	25 OF 26
CHECKED BY:	J. MIRABELLA	DRAWING NO.:	ED-08
APPROVED BY:	B. BIEHL		
DATE:	11/02/2012		
SCALE:		SIZE:	11"x17"
CONTRACT NO.:		PROJECT NO.:	7434

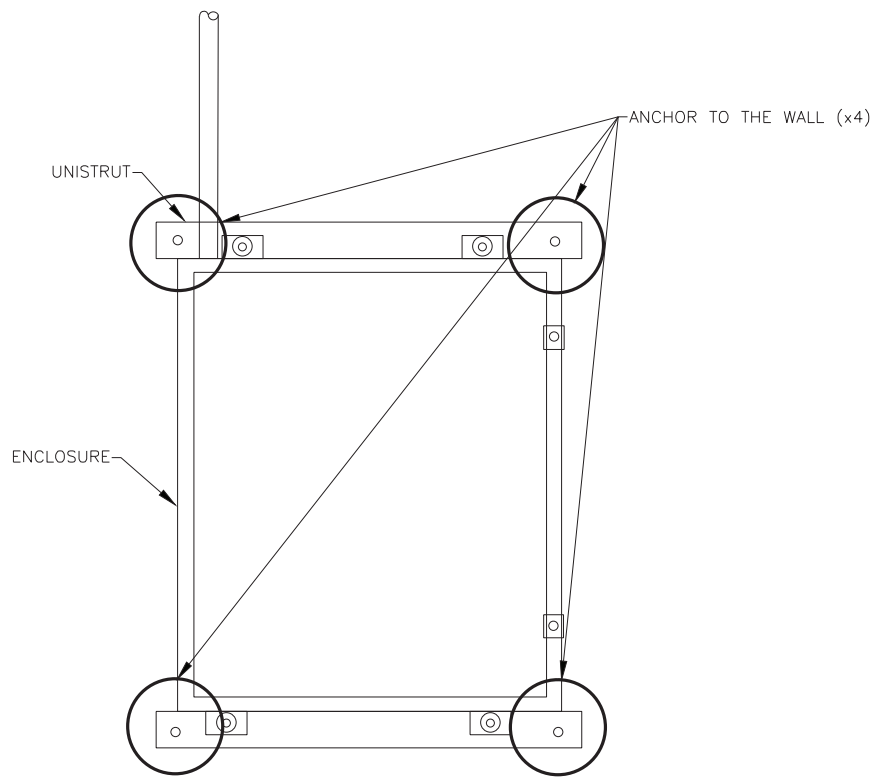

1 RTU HUB SITE
NTS

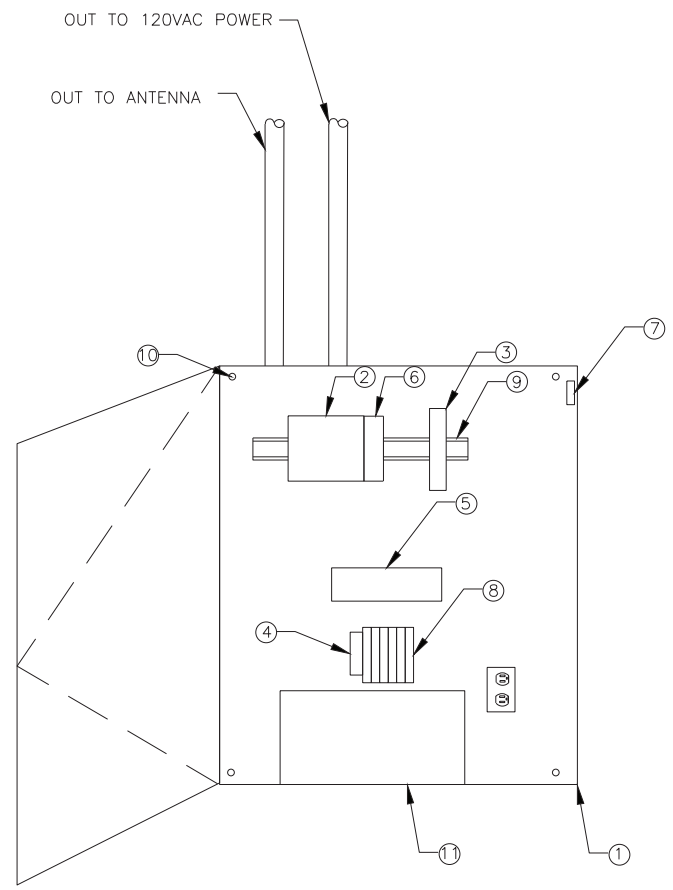

2 RTU GENERAL ARRANGEMENT (VARIES PER SITE)
NTS

ITEM#	DESCRIPTION	QUANTITY
1	ENCLOSURE	1
2	PLC	1
3	RADIO (INSTALL ONLY)	1
4	CIRCUIT BREAKER	1
5	WIREWAY	A/R
6	ETHERNET SWITCH	1
7	DOOR SWITCH	1
8	TERMINAL BLOCKS	A/R
9	DIN RAIL	A/R
10	SUB-PANEL	1
11	UPS	1

NO.	BY	DATE	DESCRIPTION

REVISIONS

STREET LIGHTING MASTER CONTROL
SCADA SYSTEM
PHASE 3

RTU WALL MOUNT
HUB SITE INSTALLATION DETAIL

Westin

WESTIN ENGINEERING, INC.
303 W. MADISON STREET, SUITE 1110
CHICAGO, IL 60606

CITY OF MILWAUKEE

DEPARTMENT OF PUBLIC WORKS

DRAWN BY:	J. JACKSON	SHEET NO.:	26 OF 26
CHECKED BY:	J. MIRABELLA	DRAWING NO.:	ED-09
APPROVED BY:	B. BIEHL		
DATE:	11/02/2012		
SCALE:		SIZE:	11"x17"
CONTRACT NO.:		PROJECT NO.:	7434