COMPRESSED NATURAL GAS FUELING SYSTEMS
LINCOLN GARAGE & NORTHWEST GARAGE

MILWAUKEE, WISCONSIN
MAY 2011

01 - LINCOLN GARAGE SITE
10 - LINCOLN GARAGE MODIFICATIONS
3921 W. LINCOLN AVENUE
MILWAUKEE, WI 53215

02 - NORTHWEST GARAGE SITE
3025 W. RUBY AVENUE
MILWAUKEE, WI 53209

60198094

PREPARED FOR:

City of Milwaukee
Department of Public Works

APPROVED: 5/26/11
SUPERVISOR IN CHARGE: Venu Gupta 5-26-2011
SUPERINTENDENT: 5/26/11
COMMISSIONER OF PUBLIC WORKS:

WISCONSIN
BRYAN K. LEWIS
E-32707
SHEBOYGAN, WIS.
PROFESSIONAL ENGINEER
5/26/11

PREPARED BY:

AECOM
4135 TECHNOLOGY PARKWAY
SHEBOYGAN, WI 53083-1883

Phone: 920-458-8711
Fax: 920-458-0537

WWW.AECOM.COM

Xrefs:
Images: L:\work\60198094\000_CADD\00-General & 99-Standard Details\Lincoln Avenue.bmp
L:\work\60198094\000_CADD\00-General & 99-Standard Details\Northwest Garage.bmp
L:\work\60198094\000_CADD\00-General & 99-Standard Details\Signatures.tiff
Time: May 12, 2011
PSLtscale: 0 Ltscale: 0.5
File: L:\work\60198094\000_CADD\00-General & 99-Standard Details\00-G-01.dwg

SHEET NO.	DWG NO.	TITLE OF SHEET
		00 - GENERAL - LINCOLN AVENUE & NORTHWEST GARAGE
1	00-G-01	COVER SHEET AND SITE LOCATIONS
2	00-G-02	DRAWING INDEX
3	00-G-03	ARCHITECTURAL AND STRUCTURAL LEGEND
4	00-G-04	PROCESS AND INSTRUMENTATION DIAGRAM LEGEND
5	00-G-05	PROCESS AND INSTRUMENTATION DIAGRAM SYMBOLS
6	00-G-06	ELECTRICAL ONE-LINE SCHEMATIC SYMBOLS
7	00-G-07	ELECTRICAL ABBREVIATIONS AND PLAN SYMBOLS
		01 - LINCOLN GARAGE SITE
		CIVIL
8	01-C-01	NEW FACILITIES AND PIPING PLAN
9	01-C-02	NEW PAVING PLAN BY DPW
		PROCESS AND INSTRUMENTATION
10	01-N-01	GAS COMPRESSION AND STORAGE
11	01-N-02	CNG STORAGE AND DISPENSING
12	01-N-03	NETWORK DIAGRAM
		STRUCTURAL
13	01-S-01	OVERALL SITE PLAN
14	01-S-02	FOUNDATIONS
15	01-S-03	CNG TIME FILL AREA
		PROCESS
16	01-M-01	OVERALL SITE PLAN
17	01-M-02	AREAS
18	01-M-03	CNG TIME FILL AREA
19	01-M-04	DETAILS
		ELECTRICAL
20	01-E-01	OVERALL SITE PLAN
21	01-E-02	CNG STATION AND DPW FAST-FILL AREA
22	01-E-03	CNG STATION AND DPW FAST-FILL AREA GROUNDING
23	01-E-04	CNG STATION AND DPW FIST-FILL AREA HAZARDOUS LOCATIONS
24	01-E-05	CNG TIME FILL AREA
25	01-E-06	CNG TIME FILL AREA HAZARDOUS LOCATIONS
26	01-E-07	PUBLIC CNG STORAGE AND DISPENSING AREA
27	01-E-08	PUBLIC CNG STORAGE AND DISPENSING AREA GROUNDING
28	01-E-09	PUBLIC CNG STORAGE AND DISPENSING AREA HAZARDOUS LOCATIONS
29	01-E-10	ONE-LINE DIAGRAM
		02 - NORTHWEST GARAGE SITE
		CIVIL
30	02-C-01	NEW FACILITIES AND PIPING PLAN
31	02-C-02	NEW PAVING PLAN
		PROCESS AND INSTRUMENTATION
32	02-N-01	GAS COMPRESSION AND STORAGE
33	02-N-02	CNG STORAGE AND DISPENSING
34	02-N-03	NORTHWEST GARAGE NETWORK DIAGRAM
		STRUCTURAL
35	02-S-01	CNG STATION AND DPW FAST-FILL AREA
		PROCESS
36	02-M-01	CNG STATION AND DPW FAST-FILL AREA
		ELECTRICAL
37	02-E-01	OVERALL SITE PLAN
38	02-E-02	CNG STATION AND DPW FAST-FILL AREA
39	02-E-03	CNG STATION AND DPW FAST-FILL AREA GROUNDING
40	02-E-04	CNG STATION AND DPW FAST-FILL AREA HAZARDOUS LOCATIONS
41	02-E-05	ONE-LINE DIAGRAM
		10 - LINCOLN GARAGE MODIFICATIONS
		ARCHITECTURAL AND STRUCTURAL
42	10-AS-01	OVERALL BUILDING PLAN
43	10-AS-02	REMOVAL PLAN
44	10-AS-03	FLOOR PLAN
45	10-AS-04	ROOF PLAN
46	10-AS-05	BUILDING SECTIONS
47	10-AS-06	SCHEDULES AND DETAILS
48	10-AS-07	ELEVATIONS AND DETAILS
		PLUMBING
49	10-P-01	PLUMBING DRAWING
50	10-P-02	PLUMBING DRAWING
51	10-P-03	PLUMBING DRAWING
		HVAC
52	10-H-01	HVAC DRAWING
53	10-H-02	HVAC DRAWING
54	10-H-03	HVAC DRAWING
55	10-H-04	HVAC DRAWING
56	10-H-05	HVAC DRAWING
		ELECTRICAL
57	10-E-01	POWER & SYSTEMS
58	10-E-02	LIGHTING & RECEPTACLES
59	10-E-03	ONE-LINE DIAGRAM & SCHEDULES

SHEET NO.	DWG NO.	TITLE OF SHEET
		99 - STANDARD DETAILS - LINCOLN AVE & NORTHWEST GARAGE
		STRUCTURAL
60	99-S-01	DETAILS
61	99-S-02	DETAILS
		STRUCTURAL AND PROCESS
62	99-SM-01	STANDARD DETAILS
63	99-SM-02	STANDARD DETAILS
		PROCESS
64	99-M-01	STANDARD DETAILS
65	99-M-02	SAFETY SIGN DETAILS
		ELECTRICAL
66	99-E-01	DETAILS
67	99-E-02	DETAILS

NOTE:

SHADED DRAWINGS ARE NOT INCLUDED IN THIS SET.

NO	REVISIONS	DRN	CHK	DATE
A	ISSUED FOR BID	BEH	BKL	05/31/11

DRN	BEH	MAY 2011
DES	BKL	MAY 2011
CHK		MAY 2011
APP	BKL	MAY 2011

AECOM
4135 TECHNOLOGY PARKWAY
SHEBOYGAN, WI 53083-1883
T 920.458.8711 F 920.458.0537
WWW.AECOM.COM

COMPRESSED NATURAL GAS FUELING SYSTEMS
LINCOLN GARAGE & NORTHWEST GARAGE
MILWAUKEE, WISCONSIN

DRAWING INDEX

DATE	MAY 2011
PROJECT NO	60198094
FILENAME	00-G-02.dwg
FILE NO	
SHEET NO	2
DRAWING NO	**00-G-02**

Xrefs: E12234bd.dwg
Images:
Plotted By: hansmannb
Plot File Date Created: May/27/2011 9:56 PM
Layout-Sheet Name: LAYOUT1
Filename: L:\WORK\60198094\000_CADD\00-GENERAL & 99-STANDARD DETAILS\00-G-02.DWG

GENERAL LEGEND

DISCIPLINE IDENTIFIER

DISCIPLINE	DISCIPLINE IDENTIFIER	DISCIPLINE STANDARD DETAIL NUMBERS
GENERAL	G	NONE
CIVIL	C	02–000 TO 02–999
ARCHITECTURAL	A	07–000 TO 07–999
STRUCTURAL	S	08–000 TO 08–999
PROCESS–MECHANICAL	M	06–000 TO 06–499
INSTRUMENTATION & CONTROL	N	06–500 TO 06–999
PLUMBING	P	09–400 TO 09–499
HVAC	H	09–000 TO 09–399 & 09–500 TO 09–999
ELECTRICAL	E	10–000 TO 10–999
REMOVALS	R	NONE

DRAWING NUMBER DESIGNATION

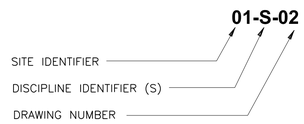

SECTION DESIGNATION

SECTION DESIGNATIONS USE LETTERS

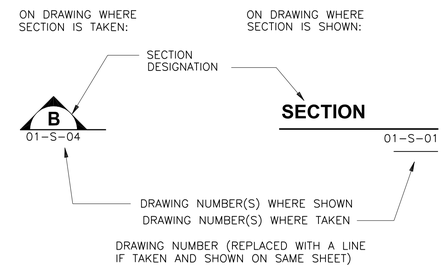

PLAN NOTE DESIGNATION

1 PLAN NOTE, SEE LIST ON SAME DRAWING

DETAIL DESIGNATION

DETAIL DESIGNATIONS USE NUMBERS

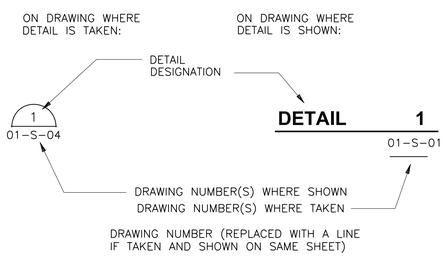

REMOVAL NOTE DESIGNATION

1 REMOVAL NOTE, SEE LIST ON SAME DRAWING

STANDARD DETAIL DESIGNATION

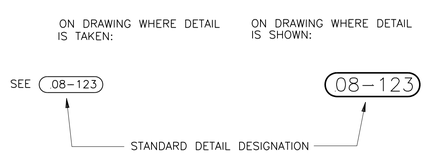

NOTE:
STANDARD DETAILS ARE LOCATED ON DRAWINGS THAT HAVE BEEN ASSIGNED A SITE IDENTIFIER OF 999 FOLLOWED BY A DISCIPLINE IDENTIFIER. EXAMPLE: 999–S–1. THESE DRAWINGS ARE PLACED LAST IN THE DRAWING SET.

ARCHITECTURAL AND STRUCTURAL LEGEND

ABBREVIATIONS

ADDL	ADDITIONAL
AL	ALUMINUM
ALT	ALTERNATE
B/	BOTTOM OF
BLDG	BUILDING
BLK	BLOCK
BOT	BOTTOM
℄	CENTERLINE
CLR	CLEAR
COL	COLUMN
CONTR JT	CONTRACTION JOINT
CJT	CONTROL JOINT
CMU	CONCRETE MASONRY UNIT
CONT	CONTINUOUS
CONC	CONCRETE
DBL	DOUBLE
DIA	DIAMETER
DN	DOWN
DWG	DRAWING
EA	EACH
EXT	EXTERIOR
EQUIP	EQUIPMENT
EWC	ELECTRIC WATER COOLER
EXP	EXPANSION
EL	ELEVATION
EXP JT	EXPANSION JOINT
EW	EACH WAY
EF	EACH FACE
FE	FIRE EXTINGUISHER
FTG	FOOTING
FD	FLOOR DRAIN
GA	GAUGE
GALV	GALVANIZED
GHM	GALVANIZED HOLLOW METAL
HORZ	HORIZONTAL
HP	HIGH POINT
HVAC	HEATING VENTILATING AND AIR CONDITIONING
INSUL	INSULATION
INT	INTERIOR
LP	LOW POINT
LLV	LONG LEG VERTICAL
LLH	LONG LEG HORIZONTAL
MFR	MANUFACTURER
MH	MANHOLE
MIN	MINIMUM
MO	MASONRY OPENING
NO. OR #	NUMBER
NTS	NOT TO SCALE
OC	ON CENTER
OPNG	OPENING
ℙ	PLATE
PJF	PREFORMED JOINT FILLER
REINF	REINFORCING
RAD	RADIUS
RCP	REINFORCED CONCRETE PIPE
REQD	REQUIRED
R	RISER
RD	ROOF DRAIN
SIM	SIMILAR
SPA	SPACE OR SPACING
SS	STAINLESS STEEL
STC	SOUND TRANSMISSION CLASS
STL	STEEL
SQ	SQUARE
T	TREAD
T/	TOP OF
T/S	TOP OF STEEL
T&B	TOP AND BOTTOM
TYP	TYPICAL
UNO	UNLESS NOTED OTHERWISE
VERT	VERTICAL
WD	WOOD
WS	WATERSTOP
W/	WITH
WWR	WELDED WIRE REINFORCEMENT

NOTE:
1. THIS IS A STANDARD LEGEND. NOT ALL THE INFORMATION SHOWN ON THIS LEGEND IS USED ON THIS PROJECT.

SYMBOLS

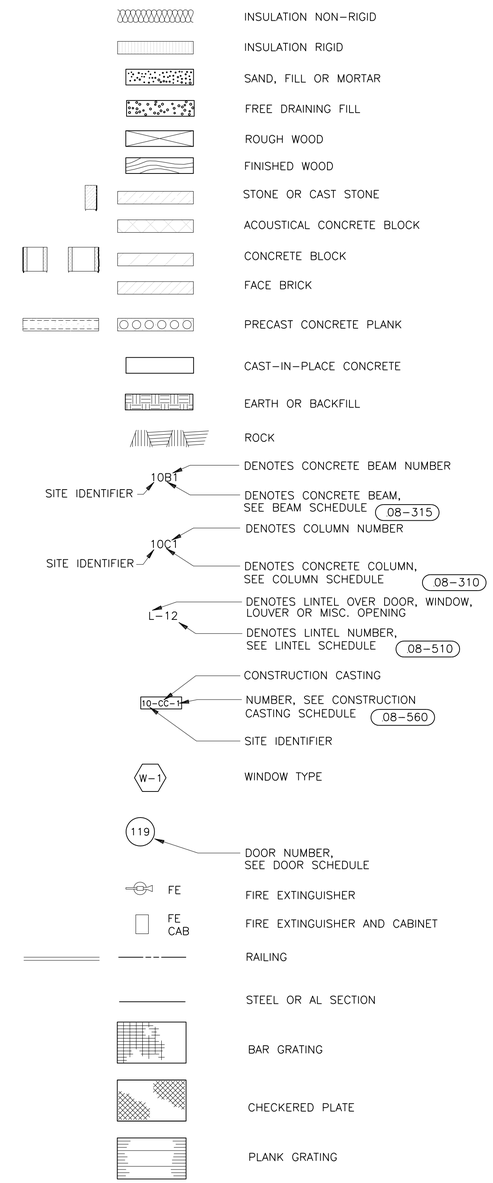

NO	REVISIONS	DRN	CHK	DATE
A	ISSUED FOR BID	BEH	BKL	05/31/11

DRN	BEH	MAY 2011
DES	KAG	MAY 2011
CHK		MAY 2011
APP	BKL	MAY 2011

AECOM
4135 TECHNOLOGY PARKWAY
SHEBOYGAN, WI 53083-1883
T 920.458.8711 F 920.458.0537
WWW.AECOM.COM

COMPRESSED NATURAL GAS FUELING SYSTEMS
LINCOLN GARAGE & NORTHWEST GARAGE
MILWAUKEE, WISCONSIN

ARCHITECTURAL AND STRUCTURAL LEGEND

DATE	MAY 2011
PROJECT NO	60198094
FILENAME	00–G–03.dwg
FILE NO	
SHEET NO	3
DRAWING NO	00-G-03

Xrefs: E12234bd.dwg
Images:
Plotted By: hansmannb
Plot File Date Created: May/25/2011 5:00 PM
Layout-Sheet Name: LAYOUT1
Filename: L:\WORK\60198094\000_CADD\00-GENERAL & 99-STANDARD DETAILS\00-G-03.DWG

INSTRUMENT IDENTIFICATION

TAG NUMBER

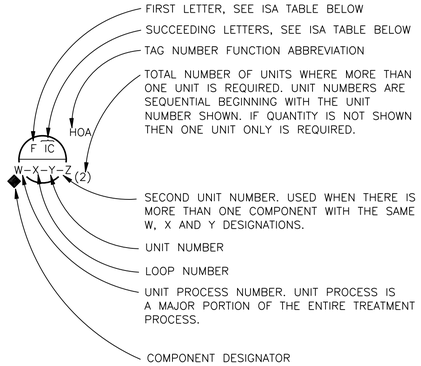

EXAMPLE SYMBOLS

	CONTROL PANEL MOUNTED ACCESSIBLE TO OPERATOR	FIELD MOUNTED	MCC/MOTOR STARTER MOUNTED NORMALLY ACCESSIBLE TO OPERATOR
DISCRETE INSTRUMENTS			
MICROPROCESSOR BASED SHARED INSTRUMENT			
COMPUTER FUNCTION		NONE	NONE

INACCESSIBLE OR BEHIND-THE-PANEL DEVICES OR FUNCTIONS MAY BE DEPICTED BY USING THE SAME SYMBOLS BUT WITH DASHED HORIZONTAL BARS, I.E.

TAG NUMBER FUNCTION ABBREVIATIONS

ALT	ALTERNATE
C	CLOSE(D)
CM	COMPUTER-MANUAL
DIFF	DIFFERENCE OR DIFFERENTIAL
DO	DISSOLVED OXYGEN
F	FAIL
F(X)	CHARACTERIZED
FOR	FORWARD-STOP-REVERSE (MAINTAINED CONTACT)
FSR	FORWARD-STOP-REVERSE (MOMENTARY CONTACT)
HOA	HAND-OFF-AUTOMATIC (MAINTAINED CONTACT)
II	CURRENT-TO-CURRENT
IP	CURRENT-TO-PNEUMATIC
LL	LEAD-LAG (MAINTAINED CONTACT)
LOR	LOCAL-OFF-REMOTE (MAINTAINED CONTACT)
LOS	LOCKOUT STOP (LOCKABLE IN "STOP" POSITION. MOMENTARY CONTACT)
LR	LOCAL-REMOTE (MAINTAINED CONTACT)
MA	MANUAL-AUTOMATIC (MAINTAINED CONTACT)
MOA	MANUAL-OFF-AUTOMATIC (MAINTAINED CONTACT)
O	OPEN
OA	OFF-AUTOMATIC
OAC	OPEN-AUTOMATIC-CLOSE (MAINTAINED CONTACT)
OC	OPEN-CLOSE(D) (MAINTAINED CONTACT)
OSC	OPEN-STOP-CLOSE (MOMENTARY CONTACT SPRING RETURN TO CENTER POSITION)
OO	ON-OFF (MAINTAINED CONTACT)
OOA	ON-OFF-AUTOMATIC (MAINTAINED CONTACT)
OOR	ON-OFF-REMOTE (MAINTAINED CONTACT)
R	RUN
SP	SPEED POT
SQRT	SQUARE ROOT
SS	START-STOP (MOMENTARY CONTACT)
SSA	START-STOP-AUTOMATIC (MOMENTARY CONTACT)
SSL	START-STOP-LOCK (LOCKABLE IN "STOP" POSITION. MOMENTARY CONTACT)
SUM	SUMMATION
VIB	VIBRATION
X	MULTIPLY
Σ	SUMMATION

INSTRUMENT SOCIETY OF AMERICA TABLE

LETTER	FIRST LETTER (S)		SUCCEEDING LETTERS		
	PROCESS OR INITIATING VARIABLE	MODIFIER	READOUT OR PASSIVE FUNCTION	OUTPUT FUNCTION	MODIFIER
A	ANALYSIS (t)		ALARM		
B	BURNER COMBUSTION		USERS CHOICE (t)	USERS CHOICE (t)	USERS CHOICE (t)
C	USERS CHOICE (t)			CONTROL	
D	USERS CHOICE (t)	DIFFERENTIAL			
E	VOLTAGE		PRIMARY ELEMENT		
F	FLOW RATE				
G	USERS CHOICE (t)		GLASS		
H	HAND (MANUAL)				HIGH
I	CURRENT		INDICATE		
J	POWER	SCAN			
K	TIME OR SCHEDULE	TIME RATE OF CHANGE		CONTROL STATION	
L	LEVEL		LIGHT (PILOT)		LOW
M	USERS CHOICE (t)	MOMENTARY			MIDDLE
N	USERS CHOICE (t)		USERS CHOICE (t)	USERS CHOICE (t)	USERS CHOICE (t)
O	USERS CHOICE (t)		ORIFICE		
P	PRESSURE OR VACUUM		POINT (TEST CONNECTION)		
Q	QUANTITY	INTEGRATE			
R	RADIOACTIVITY		RECORD OR PRINT		
S	SPEED OR FREQUENCY	SAFETY		SWITCH	
T	TEMPERATURE			TRANSMIT	
U	MULTIVARIABLE (t)		MULTIFUNCTION (t)	MULTIFUNCTION (t)	MULTIFUNCTION (t)
V	VIBRATION			VALVE	
W	WEIGHT OR FORCE		WELL		
X	UNCLASSIFIED (t)	X AXIS	UNCLASSIFIED (t)	UNCLASSIFIED (t)	UNCLASSIFIED (t)
Y	EVENT,STATE,OR PRESSURE	Y AXIS		RELAY OR COMPUTE (t)	
Z	POSITION, DIMENSION	Z AXIS		DRIVE, ACTUATE OR UNCLASSIFIED FINAL CONTROL ELEMENT	

(t) WHEN USED. EXPLANATION IS SHOWN ADJACENT TO INSTRUMENT SYMBOL.

SPECIAL CASES:

ETM – ELAPSED TIME METER
FFHK – FLOW FLOW RATE HAND CONTROL
ESD – EMERGENCY SHUTDOWN DEVICE

PROCESS FLOW

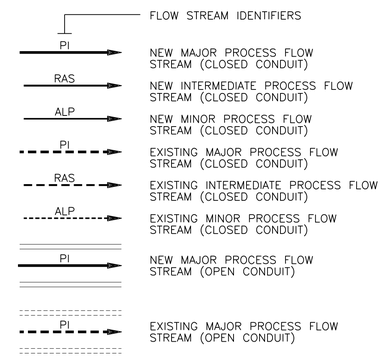

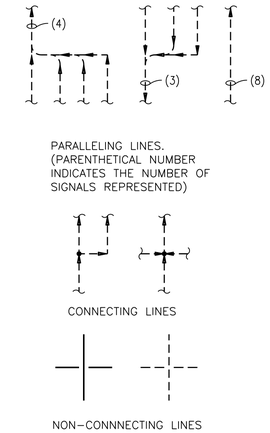

STRUCTURES AND EQUIPMENT

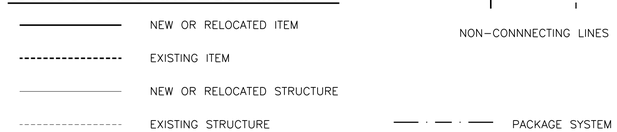

SIGNALS

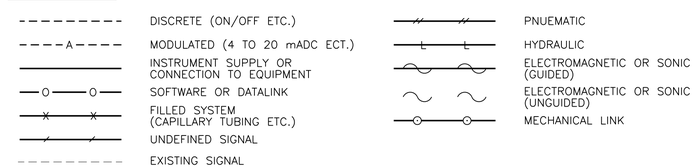

INTERFACE SYMBOLS

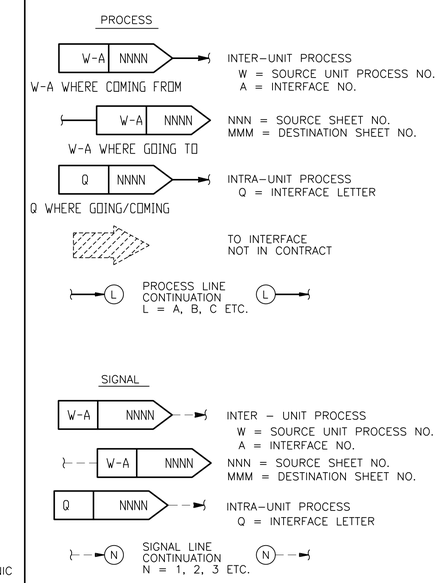

EQUIPMENT AND SELF ACTUATED VALVE IDENTIFICATION

TAG NUMBER

D-W-X-Y OR D-W-X-Y
**

D: EQUIPMENT OR SELF CONTAINED VALVE ABBREVIATION

W: UNIT PROCESS NUMBER

X: LOOP NUMBER

Y: UNIT NUMBER

** COMPONENT DESIGNATOR

EQUIPMENT ABBREVIATIONS

E	EJECTOR
G	GATE
M	MECHANICAL EQUIPMENT
P	PUMP
TK	TANK

SELF CONTAINED VALVE ABBREVIATIONS

VAR	AIR RELEASE VALVE
VAVR	AIR AND VACUUM RELIEF VALVE
VLC	LEVEL CONTROL VALVE
VPC	PRESSURE CONTROL VALVE
VTC	TEMPERATURE CONTROL VALVE
VPS	PRESSURE SAFETY (RELIEF) VALVE

POWER OPERATED VALVE IDENTIFICATION

SAME AS INSTRUMENT IDENTIFICATION.

LOCAL CONTROL PANEL IDENTIFICATION

TAG NUMBER

B-LCP-W-P ◆

B	SITE IDENTIFIER (BUILDING NUMBER)
LCP	LOCAL CONTROL PANEL
W	UNIT PROCESS NUMBER
P	PANEL NUMBER
◆	COMPONENT DESIGNATOR

COMPONENT DESIGNATORS

● CRITICAL ALARM

◆ PROVIDE IN ACCORDANCE WITH SECTION 40 90 15

◆◆ EXISTING COMPONENT TO BE RELOCATED IN ACCORDANCE WITH SECTION 40 90 15

◆◆◆ OWNER FURNISHED COMPONENT TO BE INSTALLED IN ACCORDANCE WITH SECTION 40 90 15

* OWNER FURNISHED COMPONENT TO BE INSTALLED IN ACCORDANCE WITH DIVISION 40

** PROVIDE AS PART OF A MANUFACTURER'S OR VENDOR'S PACKAGED SYSTEM IN ACCORDANCE WITH DIVISION 40 AND DIVISION 44

*** EXISTING COMPONENT TO BE RELOCATED

PROVIDE COMPONENT WITHOUT A DESIGNATOR IN ACCORDANCE WITH DIVISION 40 AND DIVISION 44

GENERAL NOTES

1. THIS IS A STANDARD LEGEND. NOT ALL OF THE INFORMATION SHOWN ON THIS LEGEND IS USED IN THESE CONTRACT DRAWINGS.
2. CROSS-HATCHED PORTIONS OF P&ID'S INDICATE FUTURE OR CONCURRENT WORK WHICH IS NOT A PART OF THIS CONTRACT.
3. THERE IS NO INTENT TO SHOW ALL EXISTING FACILITIES ON THE P&ID'S.

NO	REVISIONS	DRN	CHK	DATE
A	ISSUED FOR BID	DRH	BKL	05/31/11

DRN	DRH	MAY 2011
DES	DRH	MAY 2011
CHK	EDM	MAY 2011
APP	BKL	MAY 2011

AECOM
4135 TECHNOLOGY PARKWAY
SHEBOYGAN, WI 53083-1883
T 920.458.8711 F 920.458.0537
WWW.AECOM.COM

COMPRESSED NATURAL GAS FUELING SYSTEMS
LINCOLN GARAGE & NORTHWEST GARAGE
MILWAUKEE, WISCONSIN

PROCESS AND INSTRUMENTATION DIAGRAM LEGEND

DATE MAY 2011
PROJECT NO 60198094
FILENAME 00-G-04.dwg
FILE NO
SHEET NO 4
DRAWING NO **00-G-04**

Xrefs: E12234bd.dwg
Images:
Plotted By: hansmannb
Plot File Date Created: May/27/2011 8:21 AM
Layout-Sheet Name: MODEL
Filename: L:\WORK\60198094\000_CADD\00-GENERAL & 99-STANDARD DETAILS\00-G-04.DWG

VALVE SYMBOLS

- ECCENTRIC PLUG
- THREE-WAY
- BUTTERFLY
- BALL
- VEE-BALL
- GLOBE
- PRESSURE RELIEF
- AIR RELEASE AND VACUUM RELIEF
- GATE
- KNIFE GATE
- SAMPLE VALVE
- MUD
- BALL CHECK
- SWING CHECK
- SPLIT DISC CHECK
- REGULATED SIDE PRESSURE CONTROL
- PINCH
- DIAPHRAGM
- NEEDLE
- CALIBRATED BALANCE
- CONSTANT VOLUME FLOW REGULATOR
- TELESCOPING

GATE SYMBOLS

- SLUICE
- SLIDE
- FLAP GATE
- WEIR GATE
- STOP PLANK

VALVE AND GATE POWER ACTUATOR SYMBOLS

- M XX — ELECTRIC MOTOR
- S XX — SOLENOID
- E/H XX — HYDRAULIC WITH POSITIONER
- H S XX — HYDRAULIC WITH SOLENOID
- P Z XX — PNEUMATIC WITH POSITIONER
- P S XX — PNEUMATIC WITH SOLENOID

XX: FC = FAIL CLOSED
FIP = FAIL INTERMEDIATE POSITION
FLP = FAIL TO LAST POSITION
FO = FAIL OPEN

NOTE: XX = FAIL POSITION ON LOSS OF PRIMARY POWER (PNEUMATIC OR ELECTRICAL)

FLOW ELEMENT SYMBOLS

- WEIR
- PARSHALL FLUME
- ROTAMETER
- PROPELLER OR TURBINE METER
- ORIFICE METER
- TM — THERMAL MASS
- VORTEX SHEDDING
- CLAMP ON ULTRASONIC FLOWMETER
- MAGNETIC FLOWMETER
- PITOT-STATIC
- TARGET TYPE SENSOR
- VENTURI OR FLOW TUBE

MISCELLANEOUS SYMBOLS

- BLIND FLANGE OR CLEAN OUT
- AIR GAP
- STRAINER
- F — FLUSHING WATER CONNECTION
- S — SEAL WATER CONNECTION
- EJECTOR
- S — AUTOMATIC SAMPLER
- DIFFUSER
- BUBBLER LEVEL ELEMENT
- VENT
- RUPTURE DISK
- AS — AIR SET SEE SPECIFICATIONS
- XP — PURGE SET X: W = WATER A = AIR
- BASKET STRAINER
- FLAME ARRESTOR
- 120V — 120 VOLT, 60 HZ POWER SUPPLY POINT
- MIXER WITH ELECTRIC MOTOR
- ELECTRIC MOTOR
- S — MANUAL SAMPLE PORT
- A — AUTOMATIC DRAIN
- D — MANUAL DRIP TRAP
- Px XXX — DIAPHRAGM SEAL
- ANNULAR SEAL
- FLOW STRAIGHTENING VANE
- CALIBRATION CHAMBER
- X — DENSITY METER X: N – NUCLEAR O – OPTICAL U – ULTRASONIC
- ULTRASONIC LEVEL ELEMENT
- FLOATING MIXER WITH ELECTRIC MOTOR
- STATIC MIXER

PUMP & COMPRESSOR SYMBOLS

- SUBMERSIBLE PUMP (XX)
- CENTRIFUGAL BLOWER (XX)
- CENTRIFUGAL PUMP (DRY PIT) (XX)
- VERTICAL TURBINE PUMP (XX)
- PROGRESSING CAVITY PUMP (XX)
- LOBE PUMP, BLOWER OR COMPRESSOR (POSITIVE DISPLACEMENT) (XX)
- COMPRESSOR (PISTON) (XX)
- CHEMICAL FEED PUMP (XX)
- PLUNGER PUMP
- DIAPHRAGM PUMP
- INCLINE PUMP (XX)
- GAS COMPRESSOR (XX)

NOTE: XX: AS = ADJUSTABLE SPEED
CS-1 = CONSTANT SPEED (SINGLE SPEED)
CS-2 = CONSTANT SPEED (TWO SPEED)
CS-R = CONSTANT SPEED (REVERSIBLE)

FLOW STREAM IDENTIFIERS

NG – NATURAL GAS
CNG – COMPRESSED NATURAL GAS

INPUTS & OUTPUTS TO PLC OR DISTRIBUTED CONTROL

- (X) ANALOG INPUT
- (X) ANALOG OUTPUT
- (X) PULSE INPUT
- (X) PULSE OUTPUT
- (X) DIGITAL INPUT
- (X) DIGITAL OUTPUT

NOTE:

X = TOTAL NUMBER OF SIGNALS WHERE MORE THAN ONE SIGNAL IS REQUIRED. IF QUANTITY IS NOT SHOWN THEN ONE SIGNAL IS REQUIRED.

GENERAL NOTES:

1. THIS IS A STANDARD LEGEND. NOT ALL OF THE INFORMATION SHOWN ON THIS LEGEND IS USED IN THESE CONTRACT DRAWINGS.

NO	REVISIONS	DRN	CHK	DATE
A	ISSUED FOR BID	DRH	BKL	05/31/11

DRN	DRH	MAY 2011
DES	DRH	MAY 2011
CHK	EDM	MAY 2011
APP	BKL	MAY 2011

AECOM
4135 TECHNOLOGY PARKWAY
SHEBOYGAN, WI 53083-1883
T 920.458.8711 F 920.458.0537
WWW.AECOM.COM

COMPRESSED NATURAL GAS FUELING SYSTEMS
LINCOLN GARAGE & NORTHWEST GARAGE
MILWAUKEE, WISCONSIN

PROCESS AND INSTRUMENTATION DIAGRAM SYMBOLS

DATE	MAY 2011
PROJECT NO	60198094
FILENAME FILE NO	00-G-05.dwg
SHEET NO	5
DRAWING NO	00-G-05

Xrefs: E12234bd.dwg
Images:
Plotted By: hansmannb
Plot File Date Created: May/27/2011 8:21 AM
Layout-Sheet Name: MODEL
Filename: L:\WORK\60198094\000_CADD\00-GENERAL & 99-STANDARD DETAILS\00-G-05.DWG

ONE-LINE SYMBOLS

XXAF / YYAT — MOLDED CASE CIRCUIT BREAKER (OPEN)
(XXAF – FRAME SIZE)
(YYAT – TRIP SIZE)

XXAF / YYAT — MOLDED CASE CIRCUIT BREAKER (ENCLOSED)
WITH THERMAL/MAGNETIC PROTECTION
(XXAF – FRAME SIZE)
(YYAT – TRIP SIZE)

XXAF / YY — MOLDED CASE CIRCUIT BREAKER (OPEN)
WITH THERMAL/MAGNETIC PROTECTION
(XXAF – FRAME SIZE)
(YYAT – TRIP SIZE)

A / M — MOLDED CASE CIRCUIT BREAKER (OPEN)
WITH MAGNETIC PROTECTION ONLY

XXAF / YYAT — LOW VOLTAGE DRAWOUT CIRCUIT BREAKER
WITH THERMAL/MAGNETIC PROTECTION
(XXAF – FRAME SIZE)
(YYAT – TRIP SIZE)

FOR 2a 1b REV 2 (2a,1b) — MAGNETIC STARTER AND MOLDED CASE CIRCUIT
BREAKER IN MOTOR CONTROL CENTER STRUCTURE
(AFD – ADJUSTABLE FREQUENCY DRIVE)
(FVNR – FULL VOLTAGE NON–REVERSING)
(RVNR – REDUCED VOLTAGE NON–REVERSING)
(RVSS – REDUCED VOLTAGE SOLID STATE)
(VSD – VARIABLE SPEED DRIVE)
(2SPD – TWO SPEED)
(AUXILIARY CONTACTS – (2a TWO N.O.)(1b ONE N.C.)
(NUMERAL – NEMA SIZE)
(FOR/REV – FULL VOLTAGE REVERSING)

2 (2a,1b) — COMBINATION MAGNETIC STARTER
WITH MOLDED CASE CIRCUIT BREAKER
IN NEMA RATED ENCLOSURE

52 XXAF / YYAT — PRIMARY DRAWOUT TYPE CIRCUIT BREAKER
(XXAF – FRAME SIZE)
(YYAT – TRIP SIZE)
(52 – ANSI DEVICE NUMBER)

XXA / YYA — DISCONNECT SWITCH AIR BREAK WITH FUSE
(ENCLOSED)
(XXA – FRAME SIZE)
(YYA – TRIP SIZE)

1 (2a,1b) — MAGNETIC STARTER WITH NEMA SIZE INDICATED
(AUXILLIARY CONTACTS–(2a TWO N.O.)(1b ONE N.C.)

A — DISCONNECT SWITCH (ENCLOSED) UNFUSED
(A – AMP SIZE)

A — FUSED CUTOUTS
(A – FUSE RATING)

KVAR — POWER FACTOR CORRECTION
CAPACITOR SIZE AS INDICATED

N E L — AUTO/MANUAL
TRANSFER SWITCH

T1 30 kVA 480–120/208V 3PH, 4W — TRANSFORMER

VFD (2a,1b) — VARIABLE FREQUENCY DRIVE
WITH AUXILARY CONTACTS

RVSS (2a,1b) — REDUCED VOLTAGE SOLID
STATE STARTER WITH
AUXILARY CONTACTS

2S CP L H 1 L (2a,1b) — 2 SPEED CONSEQUENT
POLE STARTER WITH
AUXILARY CONTACTS

2S 2W L H 1 (2a,1b) — 2 SPEED 2 WINDING
STARTER WITH AUXILARY
CONTACTS

F 1 R (2a,1b) — REVERSING STARTER WITH
AUXILARY CONTACTS

A — FUSE
(A – FUSE RATING)

(3) — POTENTIAL TRANSFORMER
(3 – QUANTITY)

(3) — CURRENT TRANSFORMER
(3 – QUANTITY)

STRESS CONE

GROUND ROD

GROUND

LIGHTNING ARRESTER AND
GROUNDING TO PROTECT ALL
PHASES

RESISTOR OR MOTOR WINDING
ANTI–CONDENSATION HEATER

GENERATOR

THREE PHASE
WYE CONNECTION

THREE PHASE
DELTA CONNECTION

G — PILOT LIGHT
(G – GREEN)
(R – RED)

MPM — MONITORING PROTECTION
METERING RELAY

MP — MOTOR PROTECTION RELAY

TVSS — TRANSIENT VOLTAGE SURGE
SUPPRESSOR

CT — CURRENT
TRANSFORMER CABINET

G — GENERATOR AND LABEL
(ENCLOSED)
KW STANDBY GEN–SET

3 — MOTOR AND LABEL
(3 INDICATES HORSEPOWER)
MOTOR NAME EQUIP. TAG CIRCUIT

20 HP — CONNECTION AND LABEL
EQUIP. NAME EQUIP. TAG CIRCUIT

LP1 — LIGHTING PANEL AND LABEL
LIGHTING PANEL BOARD LP1

A — AMMETER
(AS – AMMETER PHASE SWITCH)
(CM – CUSTOMER METER)
(D – DEMAND METER)
(GD – GROUND DETECTOR)
(HZ – FREQUENCY METER)
(K – KEY INTERLOCK)
(MO – MOTOR OPERATOR)
(P – SYNCHROSCOPE)
(PF – POWER FACTOR METER)
(ST – SHUNT TRIP)
(TWM – TOTALIZING WATT HOUR METER)
(V – VOLTMETER)
(VA – VOLT–AMMETER)
(VAR – VARMETER)
(VS – VOLTMETER PHASE SWITCH)
(W – WATTMETER)
(WM – WATTHOUR METER)

HOA — CONTROL STATION
(AM – AUTO–MANUAL)
(CAM – COMPUTER–AUTO–MANUAL)
(CM – COMPUTER–MANUAL)
(DCS – DISTRIBUTED CONTROL SYSTEM)
(DS – DOOR SWITCH)
(ETM – ELAPSED TIME METER)
(FR – FORWARD–REVERSE)
(HLO – HIGH–LOW–OFF SWITCH)
(HOA – HAND–OFF–AUTO)
(HOR – HAND–OFF–REMOTE)
(LOS – LOCK–OUT–STOP)
(LR – LOCAL–REMOTE)
(MA – MANUAL–REMOTE)
(OC – OPEN–CLOSED)
(OCA – OPEN–CLOSED–AUTO)
(OCS – OPEN–CLOSED–STOP)
(OO – ON–OFF MAINTAINED CONTACT)
(OOA – ON–OFF–AUTO)
(PB – PUSHBUTTON)
(SF – SLOWER–FASTER)
(SS – START–STOP MOMENTARY CONTACT)
(USG – ULTRA SONIC GENERATOR)
(ZS – LIMIT SWITCH)

SCHEMATIC SYMBOLS

A — METER
(A – AMMETER)
(ETM – ELAPSED TIME METER)
(V – VOLTMETER)

CIRCUIT BREAKER

TO BUS L1 L2 L3 — 3 POLE NON FUSED
DISCONNECT SWITCH

TO BUS L1 L2 L3 — 3 POLE CIRCUIT BREAKER

TO BUS L1 L2 L3 A — 3 POLE FUSED
DISCONNECT SWITCH

T1 T2 T3 3 — 3 PHASE MOTOR
SINGLE SPEED

T1 T2 T3 T11 T12 T13 3 — 3 PHASE MOTOR
2 SPEED 2 WINDING

L H H H — 2 SPEED CONSEQUENT
POLE STARTER

L H — 2 SPEED 2 WINDING
STARTER

F R — FVR STARTER

M — FVNR STARTER

C — COIL

CONTACT
(N.C. – NORMALLY CLOSED)

CONTACT
(N.O. – NORMALLY OPEN)

A — FUSE
(A – FUSE RATING)

OHMS WATTS — RESISTOR

SOLENOID

GROUND

CURRENT TRANSFORMER

PC — PHOTOCELL

R — PUSH–TO–TEST
PILOT LIGHT

G — PILOT LIGHT
(G – GREEN)
(R – RED)

PUSH BUTTON (START)

PUSH BUTTON (STOP)

T.C. — TIMED DELAY
TIMED CLOSED

T.O. — TIMED DELAY
TIMED OPEN

FLOAT SWITCH

PRESSURE SWITCH

FLOW SWITCH

LIMIT SWITCH

OFF ON — ON–OFF SELECTOR SWITCH

OFF AUTO HAND — HOA SELECTOR SWITCH

H1 H2 H3 H4 X1 X2 GND TRANSFORMER — CONTROL POWER
TRANSFORMER

NOTE:

1. THIS LIST OF ABBREVIATIONS AND SYMBOLS SHOWN IS A STANDARD LIST. NOT ALL ABBREVIATIONS AND SYMBOLS ARE USED IN THESE CONTRACT DRAWINGS.

NO	REVISIONS	DRN	CHK	DATE
A	ISSUED FOR BID	DMK	BKL	05/31/11

DRN	DMK	MAY 2011
DES	DMK	MAY 2011
CHK	EDM	MAY 2011
APP	BKL	MAY 2011

AECOM
4135 TECHNOLOGY PARKWAY
SHEBOYGAN, WI 53083-1883
T 920.458.8711 F 920.458.0537
WWW.AECOM.COM

COMPRESSED NATURAL GAS FUELING SYSTEMS
LINCOLN GARAGE & NORTHWEST GARAGE
MILWAUKEE, WISCONSIN

ELECTRICAL
ONE-LINE SCHEMATIC SYMBOLS

DATE	MAY 2011
PROJECT NO	60198094
FILENAME	00–G–06.dwg
FILE NO	
SHEET NO	6
DRAWING NO	**00-G-06**

Xrefs: L:\work\60198094\000_CADD\00-General & 99-Standard Details\E12234ut.dwg
Images:
Plotted By: hansmannb
Plot File Date Created: May/27/2011 8:21 AM
Layout-Sheet Name: MODEL
Filename: L:\WORK\60198094\000_CADD\00-GENERAL & 99-STANDARD DETAILS\00-G-06.DWG

ABBREVIATIONS

1P – ONE POLE
2P – TWO POLE
3P – THREE POLE
4P – FOUR POLE
1P1W – ONE POLE, ONE WIRE
1P2W – ONE POLE, TWO WIRE
2P2W – TWO POLE, TWO WIRE
2P3W – TWO POLE, THREE WIRE
3P2W – THREE POLE, TWO WIRE
3P3W – THREE POLE, THREE WIRE
3P4W – THREE POLE, FOUR WIRE
4P4W – FOUR POLE, FOUR WIRE
A – AMPERE
AC – ALTERNATING CURRENT
AF – AMP FRAME
AFF – ABOVE FINISHED FLOOR
AFG – ABOVE FINISHED GRADE
AIC – AMPERE INTERRUPTING CAPACITY
AL – ALUMINUM
AS – AMP SWITCH
AT – AMP TRIP
ARCH – ARCHITECT
ATS – AUTOMATIC TRANSFER SWITCH
AUD – AUDIOMETER BOX CONNECTION
A/V – AUDIO VISUAL
BFG – BELOW FINISHED GRADE
BLDG – BUILDING
BP – BRANCH PANEL
C – CONDUIT (GENERIC TERM FOR RACEWAY. PROVIDE AS SPECIFIED.)
CAM – CAMERA
CAT – CATALOG
CATV – CABLE TELEVISION
CB – CIRCUIT BREAKER
CKT – CIRCUIT
COL – COLUMN
CP – CONTROL PANEL
CPT – CONTROL POWER TRANSFORMER
CT – CURRENT TRANSFORMER
CU – COPPER
℄ – CENTERLINE
Δ – DELTA
DC – DIRECT CURRENT
DISC – DISCONNECT
DP – DISTRIBUTION PANELBOARD
DT – DUSTTIGHT
DWG – DRAWING
E – WIRED ON EMERGENCY CIRCUIT
EC – ELECTRICAL CONTRACTOR
EMT – ELECTRIC METALLIC TUBING
EOL – END OF LINE
EP – EXPLOSION PROOF
ETM – ELAPSED TIME METER
EWC – ELECTRIC WATER COOLER
EXIST. – EXISTING
F – FLUSH
FA – FIRE ALARM
FBO – FURNISHED BY OTHERS
FC – FIRE PROTECTION CONTRACTOR
FDN – FOUNDATION
FLA – FULL LOAD AMPS
FMC – FLEXIBLE METALLIC CONDUIT
FRE – FIBERGLASS REINFORCED EPOXY CONDUIT
GC – GENERAL CONTRACTOR
GFCI – GROUND FAULT CIRCUIT INTERRUPTER
GFPE – GROUND FAULT PROTECTION EQUIPMENT
GND – GROUNDED
GRC – GALVANIZED RIGID CONDUIT
GRD – GROUND
GRS – GALVANIZED RIGID STEEL
HH – HANDHOLE
HID – HIGH INTENSITY DISCHARGE
HP – HORSEPOWER
HV – HIGH VOLTAGE
HVAC – HEATING, VENTILATING AND AIR CONDITIONING
HZ – HERTZ (CYCLE) PER SECOND
I&C – INSTRUMENTATION & CONTROL
IAM – INDIVIDUAL ADDRESSABLE MODULE
IG – ISOLATED GROUND
IMC – INTERMEDIATE METAL CONDUIT
JB – JUNCTION BOX
KCMIL – THOUSAND CIRCULAR MILS
K/O – KNOCK–OUT
KVA – KILOVOLT AMPERE
KVAR – KILOVOLT AMPERE REACTIVE
KW – KILOWATT
LCP – LOCAL CONTROL PANEL
LFMC – LIQUIDTIGHT FLEXIBLE METALLIC CONDUIT
LFNC – LIQUIDTIGHT FLEXIBLE NONMETALLIC CONDUIT
LP – LIGHTING PANELBOARD
LS – LIMIT SWITCH
LTG – LIGHTING
LV – LOW VOLTAGE
M – METER
MC – METAL CLAD CABLE
MCB – MAIN CIRCUIT BREAKER
MCC – MOTOR CONTROL CENTER
MDP – MAIN DISTRIBUTION PANEL
MH – MANHOLE
MISC – MISCELLANEOUS
MLO – MAIN LUGS ONLY
MOD – MOTOR OPERATED DISCONNECT SWITCH
MTD – MOUNTED
MTG – MOUNTING
MTR, M – MOTOR
MTS – MANUAL TRANSFER SWITCH
N/A – NOT APPLICABLE
NA – NON–AUTOMATIC
NC – NORMALLY CLOSED
NEC – NATIONAL ELECTRICAL CODE
NEUT, N – NEUTRAL
NF – NON FUSED
NIC – NOT IN CONTRACT
NL – NIGHT LIGHT
NM – NONMETALLIC SHEATHED CABLE
NO – NORMALLY OPEN
NRTL – NATIONALLY RECOGNIZED TESTING LAB
– NUMBER
NTS – NOT TO SCALE
OL – OVERLOAD RELAY
P – POLE
PB – PUSHBUTTON / PULL BOX
PC – PHOTOCELL
PSC – PLUMBING SYSTEM CONTRACTOR
PH ϕ – PHASE
PNL – PANEL(BOARD)
PIV – POST INDICATING VALVE
PP – POWER PANEL
PR – PAIR
PRI – PRIMARY
PT – POTENTIAL TRANSFORMER
PVC – POLYVINYL CHLORIDE CONDUIT
PWR – POWER
REC – RECESSED
RMC – RIGID METAL CONDUIT
RT – RAINTIGHT
RTD – RESISTANCE TEMPERATURE DETECTOR
RSC – RIGID STEEL CONDUIT
S – SURFACE MOUNTED
SB – SPLICEBOX
SEC – SECONDARY
SEL – SELECTOR SWITCH
SIG – SIGNAL
SN – SOLID NEUTRAL
SOL – SOLENOID VALVE
SP – SPARE
SPL – SPLICE
SS – STAINLESS STEEL
STP – SHIELDED TWISTED PAIR
STL – CARBON STEEL
SUSP – SUSPENDED
SW – SWITCH
SWBD – SWITCHBOARD
TC – TELEPHONE CABINET
TCI – TELECOMMUNICATIONS CABLING INSTALLER
TEL/DATA – TELEPHONE / DATA
TEL – TELEPHONE
TERM – TERMINAL(S)
TYP – TYPICAL
UG – UNDERGROUND
U.O.I. – UNLESS OTHERWISE INDICATED
UTP – UNSHIELDED TWISTED PAIR
V – VOLT
VFD – VARIABLE FREQUENCY DRIVE
VT – VAPORTIGHT
Y – WYE
W – WATT
WH – WATTHOUR
WP – WEATHERPROOF
WT – WATERTIGHT
XFMR – TRANSFORMER
XP – EXPLOSION PROOF
ZAM – ZONE ADAPTER MODULE
+72 – MOUNTING UNITS TO CENTERLINE ABOVE FINISHED FLOOR OR GRADE

RECEPTACLES AND OUTLETS NOTATIONS

a – SWITCHED OUTLET, a INDICATES SWITCH CONTROL
B – PEDESTAL MOUNTED ON BENCH TOP
BF – BELOW FLOOR
C – MOUNTED 6" ABOVE COUNTER OR 42" AFF COORDINATE EXACT MOUNTING HEIGHT WITH ARCHITECTURAL DRAWINGS.
CLG – CEILING MOUNTED
D – DEDICATED DEVICE ON INDIVIDUAL BRANCH CIRCUIT
E – EMERGENCY
EXIST. – EXISTING DEVICE / EQUIPMENT
F – FLUSH FLOOR BOX WITH FIRE / SMOKE RATED PENETRATION
GFCI – GROUND FAULT CIRCUIT INTERUPTER, PERSONAL PROTECTION
GFPE – GROUND FAULT PROTECTION OF EQUIPMENT
H – HORIZONTALLY MOUNTED
IG – ISOLATED GROUND RECEPTACLE WITH SEPARATE GREEN GROUND CONDUCTOR TO ISOLATED GROUND BUS IN PANEL
M – MODULAR FURNITURE SERVICE – PROVIDE FLEXIBLE CONNECTION, COORDINATE EXACT LOCATION WITH FURNITURE PLANS
PED – PEDESTAL MOUNTED WITH TWO HOUR FIRE / SMOKE RATED PENETRATION
PT – POKE THRU WITH TWO HOUR FIRE / SMOKE RATED PENETRATION
S – SURFACE MOUNTED FLOOR BOX
SP – SURGE PROTECTION RECEPTACLE
T – TAMPER RESISTANT SAFETY RECEPTACLE
TL – TWIST–LOCK
W – WALL MOUNTED DEVICE AT 48" AFF UNLESS OTHERWISE INDICATED
WP – WEATHERPROOF RECEPTACLE WITH "NRTL" LISTED COVERPLATE FOR WET LOCATION WITH PLUG INSTALLED. MTD. 48" AFF UNLESS OTHERWISE INDICATED
+XX – DIMENSIONED HEIGHT

LIGHTING SYMBOLS

SURFACE MOUNTED FIXTURE (LETTER DENOTES TYPE)
WALL MOUNTED FIXTURE (LETTER DENOTES TYPE)
EMERGENCY BACKUP FIXTURE (LETTER DENOTES TYPE)
RECESSED FIXTURE (LETTER DENOTES TYPE)
EXIT LIGHT WITH INDICATING DIRECTIONAL ARROW
SUSPENDED FIXTURE (LETTER DENOTES TYPE)
POLE MOUNTED FIXTURE (LETTER DENOTES TYPE)
DUAL HEAD EMERGENCY BATTERY LIGHT
EMERGENCY BATTERY REMOTE LIGHTING HEADS

DEVICE SYMBOLS

OCCUPANCY SENSOR, WALL MOUNTED WITH OFF–AUTO OVERRIDE SWITCH
SINGLE GROUNDED RECEPTACLE – 120V
DUPLEX GROUNDED RECEPTACLE – 120V
DUPLEX GROUNDED RECEPTACLE – 120V MOUNTED 6" ABOVE COUNTER
SINGLE GROUNDED RECEPTACLE – 208V NEMA 6–20R OR NEMA 6–30R
SPECIAL PURPOSE RECEPTACLE, NEMA TYPE AND AMPERE RATING AS INDICATED
JUNCTION BOX
SINGLE POLE SWITCH
TWO POLE SWITCH
3–WAY SWITCH
4–WAY SWITCH

MOTOR SYMBOLS

MANUAL STARTER WITH PILOT LIGHT
SINGLE PHASE MAGNETIC STARTER
COMBINATION MAGNETIC STARTER AND DISCONNECT SWITCH
NON–FUSED DISCONNECT SWITCH (NUMERAL INDICATES SWITCH RATING)
MOTOR
DAMPER MOTOR
CONNECTION TO EQUIPMENT
MOTOR STARTER SWITCH
TOGGLE DISCONNECT SWITCH
RELAY
MAGNETIC CONTACTOR (SIZE AS INDICATED ON DRAWINGS)
THREE PHASE MAGNETIC STARTER
THREE PHASE COMBINATION MAGNETIC STARTER AND DISCONNECT SWITCH
FUSED DISCONNECT SWITCH – 3 POLE UNLESS OTHERWISE INDICATED (UPPER NUMERAL INDICATES SWITCH RATING) (LOWER NUMERAL INDICATES FUSE RATING)
PHOTO CELL
PUSH BUTTON
TIME SWITCH
THERMAL MOTOR SWITCH WITH HANDLE GUARD AND PADLOCK CAPABILITY ("P" INDICATES PILOT LIGHT)

SYSTEM SYMBOLS

SECURITY

CCTV CAMERA (WP – WEATHERPROOF EXTERIOR CAMERA)
ELECTRIC DOOR STRIKE (DR – ELECTRIC DOOR OPENER) (DS – DOOR SWITCH) (DC – SECURITY DOOR CONTACTS)
SECURITY KEYPAD (ML – SECURITY DOOR ALARM MAGNETIC LOCK)
LOUD RINGER
CCTV COAXIAL CABLE OUTLET AND POWER OUTLET (MTV – CCTV MONITOR OULET) (SCP – SECURITY CONTROL PANEL)
MOTION DETECTOR
MASTER INTERCOM AND DIRECTORY UNIT (IC – INTERCOM UNIT)
SECURITY CARD READER (WP – WEATHERPROOF)

FIRE

FIRE ALARM CONTROL PANEL (FAA INDICATES ANNUNCIATOR PANEL) (EVAC INDICATES VOICE EVACUATION PANEL)
HORN AND STROBE (INDOOR)
HORN AND STROBE (OUTDOOR)
BELL AND STROBE
SMOKE DETECTOR
SMOKE DETECTOR (D – DUCT) (A – AREA TYPE USED AT DUCT WORK OPENING) (E – ELEVATOR RECALL) (SC – SELF CONTAINED–SINGLE STATION TYPE) (V – VISUAL AND AUDIBLE SIGNAL)
BEAM SMOKE DETECTOR (R – RECEIVER) (S – SENDING UNIT)
REMOTE STATION FOR DUCT MOUNTED SMOKE DETECTORS
HORN UNIT ONLY (S – STROBE UNIT ONLY)
CARBON MONOXIDE DETECTOR
FLAME DETECTOR
AUTOMATIC HEAT DETECTOR (RATE OF RISE) (F – FIXED TEMPERATURE)
MANUAL PULL STATION
TAMPER SWITCH (FS – WATER FLOW SWITCH) (PS – LOW PRESSURE SWITCH)
METHANE GAS TRANSMITTER @ 54"
METHANE GAS DETECTOR
IONIZATION DETECTOR

COMMUNICATIONS

DATA OUTLET
TELEPHONE/DATA OUTLET
VOLUME CONTROL
MASTER INTERCOM AND DIRECTORY UNIT (IC – INTERCOM UNIT)
TELEPHONE OUTLET (W – WALL MOUNTED)
SPEAKER HORN
SPEAKER
TERMINAL CABINET

SITE SYMBOLS

HANDHOLE
DIRECT BURIAL CABLE
MANHOLE
UNDERGROUND ELECTRICAL DUCT

POWER SYMBOLS

POWER PANEL
MCC SECTION
GENERATOR
METER
METER AND SOCKET (P – PEDESTAL MOUNT) (S – SURFACE MOUNT)
LIGHTING PANEL
TRANSFORMER ("W" – WALL MOUNT)
TRANSFER SWITCH ("MTS" – MANUAL TRANSFER SWITCH) ("ATS" – AUTOMATIC TRANSFER SWITCH)

RACEWAY SYMBOLS

CONDUIT TURNING DOWN OR AWAY FROM OBSERVER
CONDUIT STUB
HOMERUN CIRCUIT OR CONDUCTORS
CONDUIT TURNING UP OR TO OBSERVER
FLEXIBLE CONDUIT CONNECTION

GROUNDING SYMBOLS

MAIN GROUND LOOP (SIZE PER DRAWING)
GROUND TAP (SIZE PER DRAWING)
CADWELD GROUND CONNECTION
GROUND ROD
GROUND TEST STATION
EQUIPMENT GROUND CABLE STUB–UP

MOTOR CONTROL CENTER

10MCC–1
BUILDING NO.
MCC NO.

PANEL BOARDS

10LP1–4
BUILDING NO.
LIGHTING OR POWER PANEL AS INDICATED
PANEL NO.
CIRCUIT NO.

NOTE:

1. THIS LIST OF ABBREVIATIONS AND SYMBOLS SHOWN IS A STANDARD LIST. NOT ALL ABBREVIATIONS AND SYMBOLS ARE USED IN THESE CONTRACT DRAWINGS.

NO	REVISIONS	DRN	CHK	DATE
A	ISSUED FOR BID	DMK	BKL	05/31/11

DRN	DMK	MAY 2011
DES	DMK	MAY 2011
CHK	EDM	MAY 2011
APP	BKL	MAY 2011

AECOM
4135 TECHNOLOGY PARKWAY
SHEBOYGAN, WI 53083-1883
T 920.458.8711 F 920.458.0537
WWW.AECOM.COM

COMPRESSED NATURAL GAS FUELING SYSTEMS
LINCOLN GARAGE & NORTHWEST GARAGE
MILWAUKEE, WISCONSIN

ELECTRICAL ABBREVIATIONS AND PLAN SYMBOLS

DATE MAY 2011
PROJECT NO 60198094
FILENAME 00-G-07.dwg
FILE NO
SHEET NO 7
DRAWING NO 00-G-07

Xrefs: L:\work\60198094\000_CADD\00-General & 99-Standard Details\E12234ut.dwg
Images:
Plotted By: hansmannb
Plot File Date Created: May/27/2011 8:22 AM
Layout-Sheet Name: MODEL
Filename: L:\WORK\60198094\000_CADD\00-GENERAL & 99-STANDARD DETAILS\00-G-07.DWG

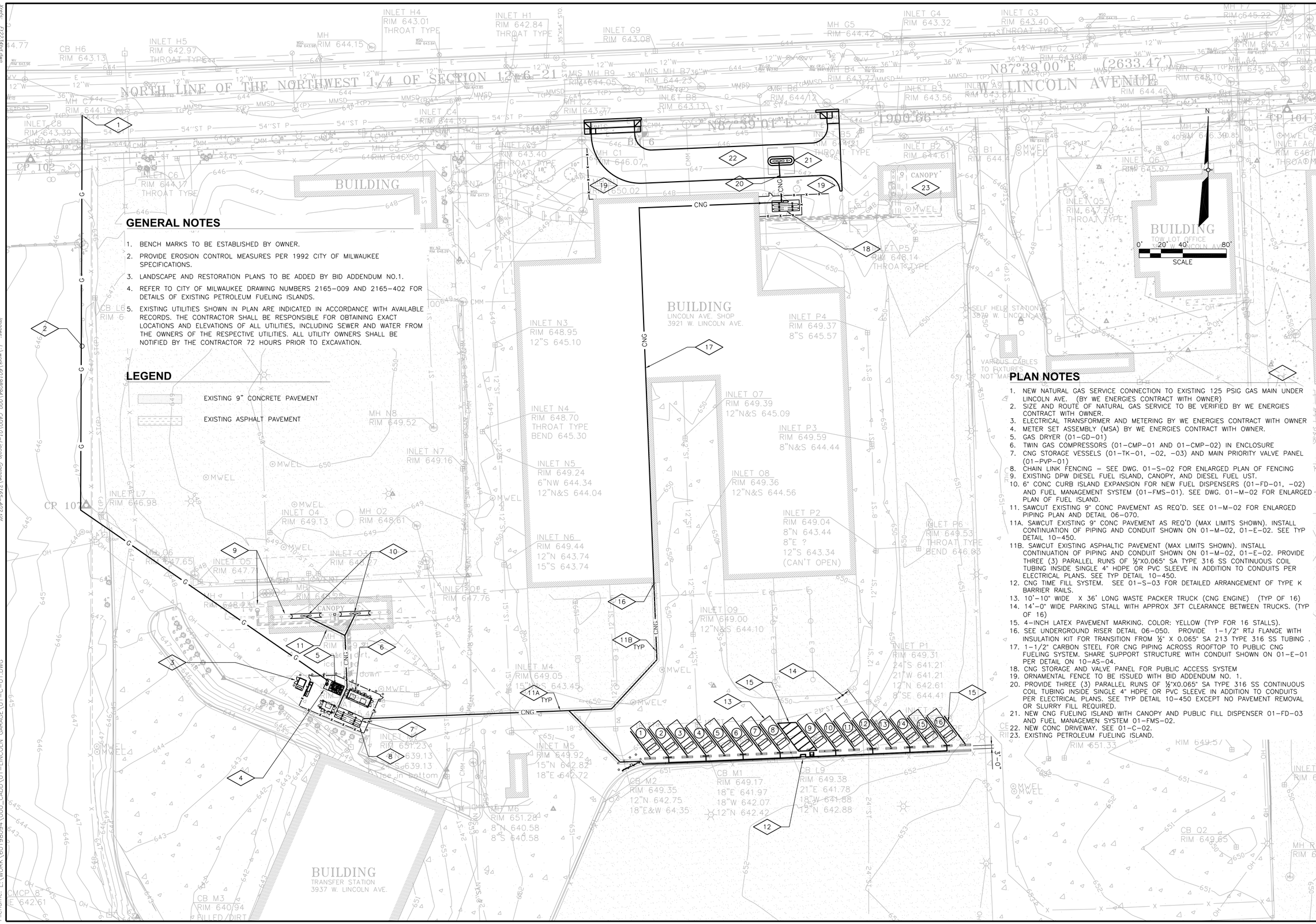

GENERAL NOTES

1. BENCH MARKS TO BE ESTABLISHED BY OWNER.
2. PROVIDE EROSION CONTROL MEASURES PER 1992 CITY OF MILWAUKEE SPECIFICATIONS.
3. LANDSCAPE AND RESTORATION PLANS TO BE ADDED BY BID ADDENDUM NO.1.
4. REFER TO CITY OF MILWAUKEE DRAWING NUMBERS 2165-009 AND 2165-402 FOR DETAILS OF EXISTING PETROLEUM FUELING ISLANDS.
5. EXISTING UTILITIES SHOWN IN PLAN ARE INDICATED IN ACCORDANCE WITH AVAILABLE RECORDS. THE CONTRACTOR SHALL BE RESPONSIBLE FOR OBTAINING EXACT LOCATIONS AND ELEVATIONS OF ALL UTILITIES, INCLUDING SEWER AND WATER FROM THE OWNERS OF THE RESPECTIVE UTILITIES. ALL UTILITY OWNERS SHALL BE NOTIFIED BY THE CONTRACTOR 72 HOURS PRIOR TO EXCAVATION.

LEGEND

EXISTING 9" CONCRETE PAVEMENT

EXISTING ASPHALT PAVEMENT

PLAN NOTES

1. NEW NATURAL GAS SERVICE CONNECTION TO EXISTING 125 PSIG GAS MAIN UNDER LINCOLN AVE. (BY WE ENERGIES CONTRACT WITH OWNER)
2. SIZE AND ROUTE OF NATURAL GAS SERVICE TO BE VERIFIED BY WE ENERGIES CONTRACT WITH OWNER.
3. ELECTRICAL TRANSFORMER AND METERING BY WE ENERGIES CONTRACT WITH OWNER
4. METER SET ASSEMBLY (MSA) BY WE ENERGIES CONTRACT WITH OWNER.
5. GAS DRYER (01-GD-01)
6. TWIN GAS COMPRESSORS (01-CMP-01 AND 01-CMP-02) IN ENCLOSURE
7. CNG STORAGE VESSELS (01-TK-01, -02, -03) AND MAIN PRIORITY VALVE PANEL (01-PVP-01)
8. CHAIN LINK FENCING - SEE DWG. 01-S-02 FOR ENLARGED PLAN OF FENCING
9. EXISTING DPW DIESEL FUEL ISLAND, CANOPY, AND DIESEL FUEL UST.
10. 6" CONC CURB ISLAND EXPANSION FOR NEW FUEL DISPENSERS (01-FD-01, -02) AND FUEL MANAGEMENT SYSTEM (01-FMS-01). SEE DWG. 01-M-02 FOR ENLARGED PLAN OF FUEL ISLAND.
11. SAWCUT EXISTING 9" CONC PAVEMENT AS REQ'D. SEE 01-M-02 FOR ENLARGED PIPING PLAN AND DETAIL 06-070.

11A. SAWCUT EXISTING 9" CONC PAVEMENT AS REQ'D (MAX LIMITS SHOWN). INSTALL CONTINUATION OF PIPING AND CONDUIT SHOWN ON 01-M-02, 01-E-02. SEE TYP DETAIL 10-450.

11B. SAWCUT EXISTING ASPHALTIC PAVEMENT (MAX LIMITS SHOWN). INSTALL CONTINUATION OF PIPING AND CONDUIT SHOWN ON 01-M-02, 01-E-02. PROVIDE THREE (3) PARALLEL RUNS OF ½"X0.065" SA TYPE 316 SS CONTINUOUS COIL TUBING INSIDE SINGLE 4" HDPE OR PVC SLEEVE IN ADDITION TO CONDUITS PER ELECTRICAL PLANS. SEE TYP DETAIL 10-450.

12. CNG TIME FILL SYSTEM. SEE 01-S-03 FOR DETAILED ARRANGEMENT OF TYPE K BARRIER RAILS.
13. 10'-10" WIDE X 36' LONG WASTE PACKER TRUCK (CNG ENGINE) (TYP OF 16)
14. 14'-0" WIDE PARKING STALL WITH APPROX 3FT CLEARANCE BETWEEN TRUCKS. (TYP OF 16)
15. 4-INCH LATEX PAVEMENT MARKING. COLOR: YELLOW (TYP FOR 16 STALLS).
16. SEE UNDERGROUND RISER DETAIL 06-050. PROVIDE 1-1/2" RTJ FLANGE WITH INSULATION KIT FOR TRANSITION FROM ½" X 0.065" SA 213 TYPE 316 SS TUBING .
17. 1-1/2" CARBON STEEL FOR CNG PIPING ACROSS ROOFTOP TO PUBLIC CNG FUELING SYSTEM. SHARE SUPPORT STRUCTURE WITH CONDUIT SHOWN ON 01-E-01 PER DETAIL ON 10-AS-04.
18. CNG STORAGE AND VALVE PANEL FOR PUBLIC ACCESS SYSTEM
19. ORNAMENTAL FENCE TO BE ISSUED WITH BID ADDENDUM NO. 1.
20. PROVIDE THREE (3) PARALLEL RUNS OF ½"X0.065" SA TYPE 316 SS CONTINUOUS COIL TUBING INSIDE SINGLE 4" HDPE OR PVC SLEEVE IN ADDITION TO CONDUITS PER ELECTRICAL PLANS. SEE TYP DETAIL 10-450 EXCEPT NO PAVEMENT REMOVAL OR SLURRY FILL REQUIRED.
21. NEW CNG FUELING ISLAND WITH CANOPY AND PUBLIC FILL DISPENSER 01-FD-03 AND FUEL MANAGEMEN SYSTEM 01-FMS-02.
22. NEW CONC DRIVEWAY. SEE 01-C-02.
23. EXISTING PETROLEUM FUELING ISLAND.

NO	REVISIONS	DRN CHK	DATE
A	ISSUED FOR BID	BEH BKL	05/31/11

DRN	BEH	MAY 2011
DES	BKL	MAY 2011
CHK		MAY 2011
APP	BKL	MAY 2011

AECOM
4135 TECHNOLOGY PARKWAY
SHEBOYGAN, WI 53083-1883
T 920.458.8711 F 920.458.0537
WWW.AECOM.COM

COMPRESSED NATURAL GAS FUELING SYSTEMS
LINCOLN GARAGE SITE
MILWAUKEE, WISCONSIN

CIVIL
NEW FACILITIES AND PIPING PLAN

DATE	MAY 2011
PROJECT NO	60198094
FILENAME	01-C-01.dwg
FILE NO	
SHEET NO	8
DRAWING NO	01-C-01

Plotted By: hansmannb
Plot File Date Created: May/28/2011 10:28 AM
Layout-Sheet Name: LAYOUT
Filename: L:\WORK\60198094\000_CADD\01-LINCOLN GARAGE\01-C-01.DWG

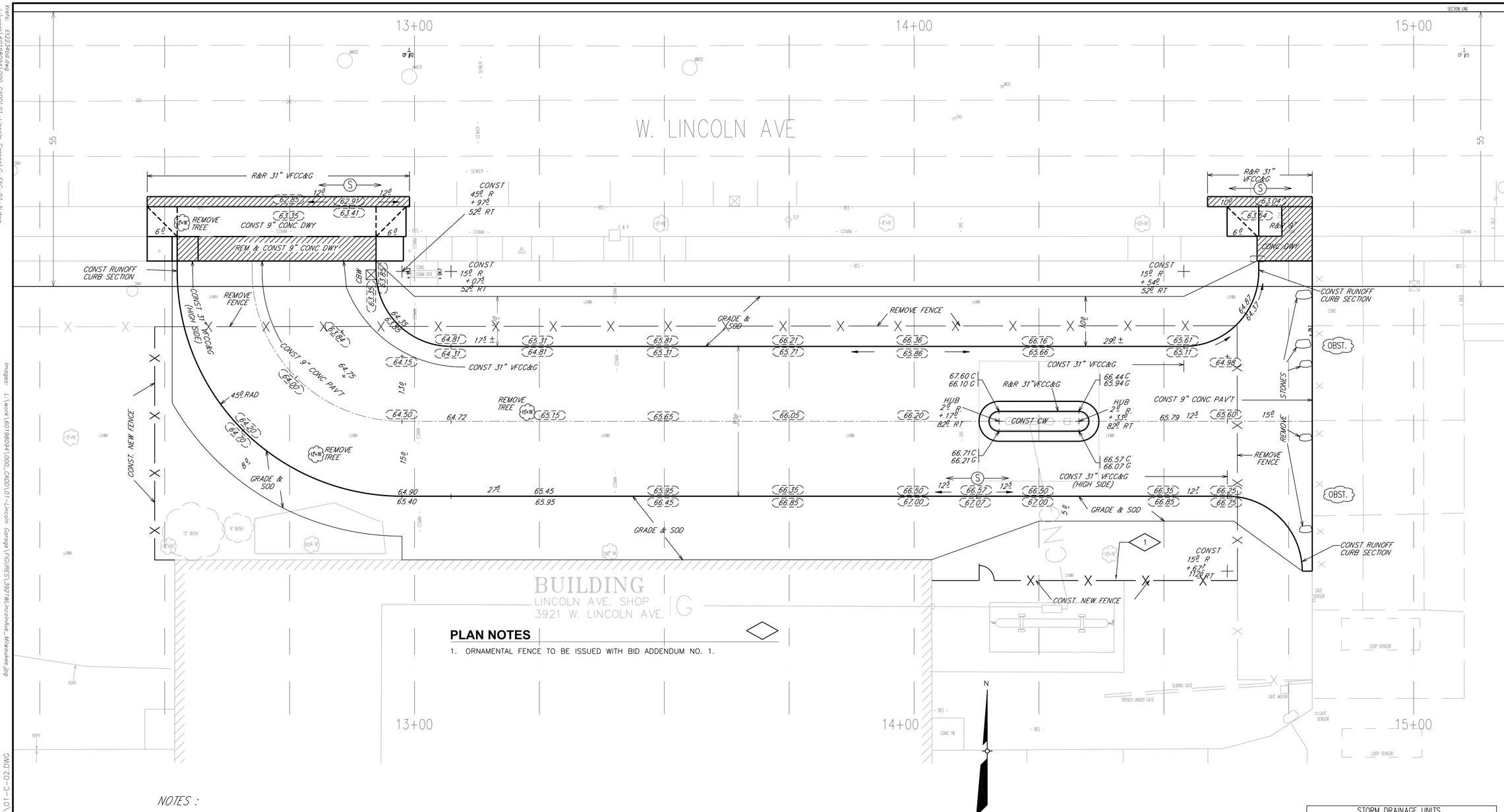

PLAN NOTES

1. ORNAMENTAL FENCE TO BE ISSUED WITH BID ADDENDUM NO. 1.

NOTES :

- (I), (II), (III), DENOTES RAMP TYPE.
- CONSTRUCT ALL CARRIAGE WALKS AND DRIVEWAYS PER CITY OF MILWAUKEE SPECIFICATIONS.
- OFFSET MEASUREMENTS TO TREES, WOOD POLES AND LIGHT POLES ARE TAKEN TO EDGE NEAREST THE CENTERLINE.
- OFFSET MEASUREMENTS TO HYDRANTS ARE TAKEN TO THE OPERATING NUT.

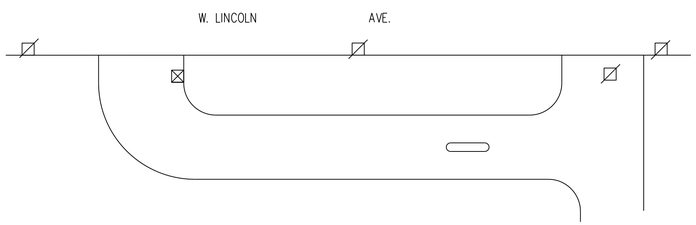

Transit Line is 8.00' South of the Section Line on W. Lincoln Ave Station 20+00 is the Iron Pipe on SW Corner of #3716 W. Lincoln

EROSION	CONTROL	AND	C.B.	REQUISITION	PLAN
TYPE M	☒ -CBW	☐ -RESET	X-ABANDON		NO WORK
5	1	0	0		

BM: CONC BASE AT N/S WP #78-3391 ELEV: 64.68

BM: HYD N/S EAST OF DWY FOR #4000 W. LINCOLN ELEV. 64.99

0' 8' 16' 32'
SCALE

STORM DRAINAGE UNITS		
C.B.W.- 1	RESET- 0	ABANDON-0
PROJECT IN (COMB) AREA		

INFRASTRUCTURE SERVICES DIVISION
CONSTRUCTION SECTION
DESIGN & SURVEY SERVICES
MILWAUKEE,WISCONSIN

Levels By: L.BEKELE, P.ZETTEL
Date: 4-13-11
Drawn By: L.BEKELE, P.ZETTEL
Date: 4-15-11
File No: Lincoln Garage CNG Station.dgn

DEPARTMENT OF PUBLIC WORKS
INFRASTRUCTURE SERVICES DIVISION
FIELD OPERATIONS
FIELD & DESIGN ENGINEERING
MILWAUKEE, WISCONSIN

FILE NO. ____

PLAN OF: W. LINCOLN AVE. GARAGE
CNG STATION
THIS SECTION:

DRAWN BY		DATE:	PROJECT NO. BU520104000		SHEET 1 OF 1
DESCRIPTIONS BY		DATE:			
LEVELS BY	ALVEY	DATE:	SCALE	1/4 SEC.	ALD.DIST.
LEVELS TRANSF. BY		DATE:	1"=10'	49.3	8.
DESIGNED BY	MANHARDT	DATE: 4-29-11	OBSTRUCTIONS - SEE OBSTRUCTION LIST		
GRADES TRANSF. BY	D.BEKELE	DATE: 5-3-11	REVISED:		
CHECKED BY		DATE:	REVISED:		
APPROVED BY		DATE:	REVISED:		
FILE: DGNFILENAME					
PLOT DATE: DGNDATE					

NO	REVISIONS	DRN	CHK	DATE
A	ISSUED FOR BID	BEH	BKL	05/31/11

DRN	BEH	MAY 2011
DES	BKL	MAY 2011
CHK		MAY 2011
APP	BKL	MAY 2011

AECOM
4135 TECHNOLOGY PARKWAY
SHEBOYGAN, WI 53083-1883
T 920.458.8711 F 920.458.0537
WWW.AECOM.COM

COMPRESSED NATURAL GAS FUELING SYSTEMS
LINCOLN GARAGE SITE
MILWAUKEE, WISCONSIN

CIVIL
NEW PAVING PLAN BY DPW

DATE	MAY 2011
PROJECT NO	60198094
FILENAME	01-C-02.dwg
FILE NO	
SHEET NO	9
DRAWING NO	01-C-02

Xrefs: E122340d.dwg
L:\work\60198094\000_CADD\01-Lincoln Garage\C-FAC-01-N.dwg
L:\work\60198094\000_CADD\01-Lincoln Garage\CIVIL\29193.dwg
Images: L:\work\60198094\000_CADD\01-Lincoln Garage\FIGURES\3921WLincolnAve_Milwaukee1.jpg
Plotted By: hansmannb
Plot File Date Created: May/27/2011 9:37 PM
Layout-Sheet Name: LAYOUT
Filename: L:\WORK\60198094\000_CADD\01-LINCOLN GARAGE\01-C-02.DWG

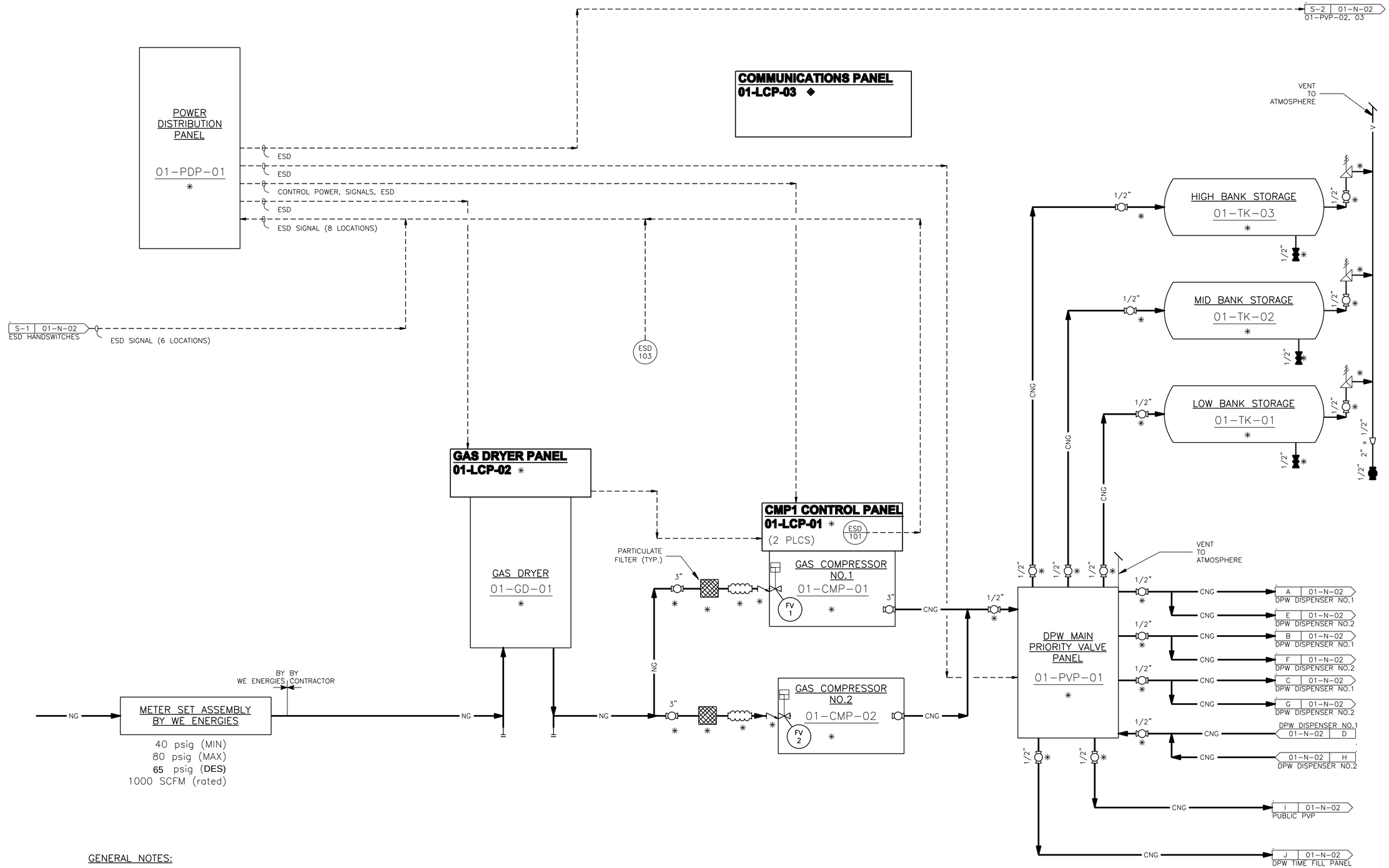

GENERAL NOTES:

1. NETWORK COMMUNICATIONS TO BE SHOWN IN ADDENDUM NO. 1.
2. THIS DRAWING IS NOT A PIPING DIAGRAM.
3. SEE M DRAWINGS FOR PIPING CONFIGURATIONS.
4. * = OWNER FURNISHED EQUIPMENT TO BE INSTALLED AND WIRED ACCORDING TO DIVISION 26 AND 40.

NO	REVISIONS	DRN	CHK	DATE
A	ISSUED FOR BID	DRH	BKL	05/31/11

DRN	DRH	MAY 2011
DES	DRH	MAY 2011
CHK	BKL	MAY 2011
APP	BKL	MAY 2011

AECOM
4135 TECHNOLOGY PARKWAY
SHEBOYGAN, WI 53083-1993
T 920.458.8711 F 920.458.0537
WWW.AECOM.COM

COMPRESSED NATURAL GAS FUELING SYSTEMS
LINCOLN GARAGE SITE
MILWAUKEE, WISCONSIN

PROCESS AND INSTRUMENTATION GAS COMPRESSION AND STORAGE

DATE	MAY 2011
PROJECT NO	60198094
FILENAME	01-N-01.dwg
FILE NO	
SHEET NO	10
DRAWING NO	01-N-01

Xrefs: L:\work\60198094\000_CAD\01-Lincoln Garage\E23240d.dwg
Images:
Plotted By: haused
Plot File Date Created: May/27/2011 1:24 PM
Layout-Sheet Name: 01-N-01
Filename: L:\WORK\60198094\000_CADD\01-LINCOLN GARAGE\PID_2008\01-N-01.DWG

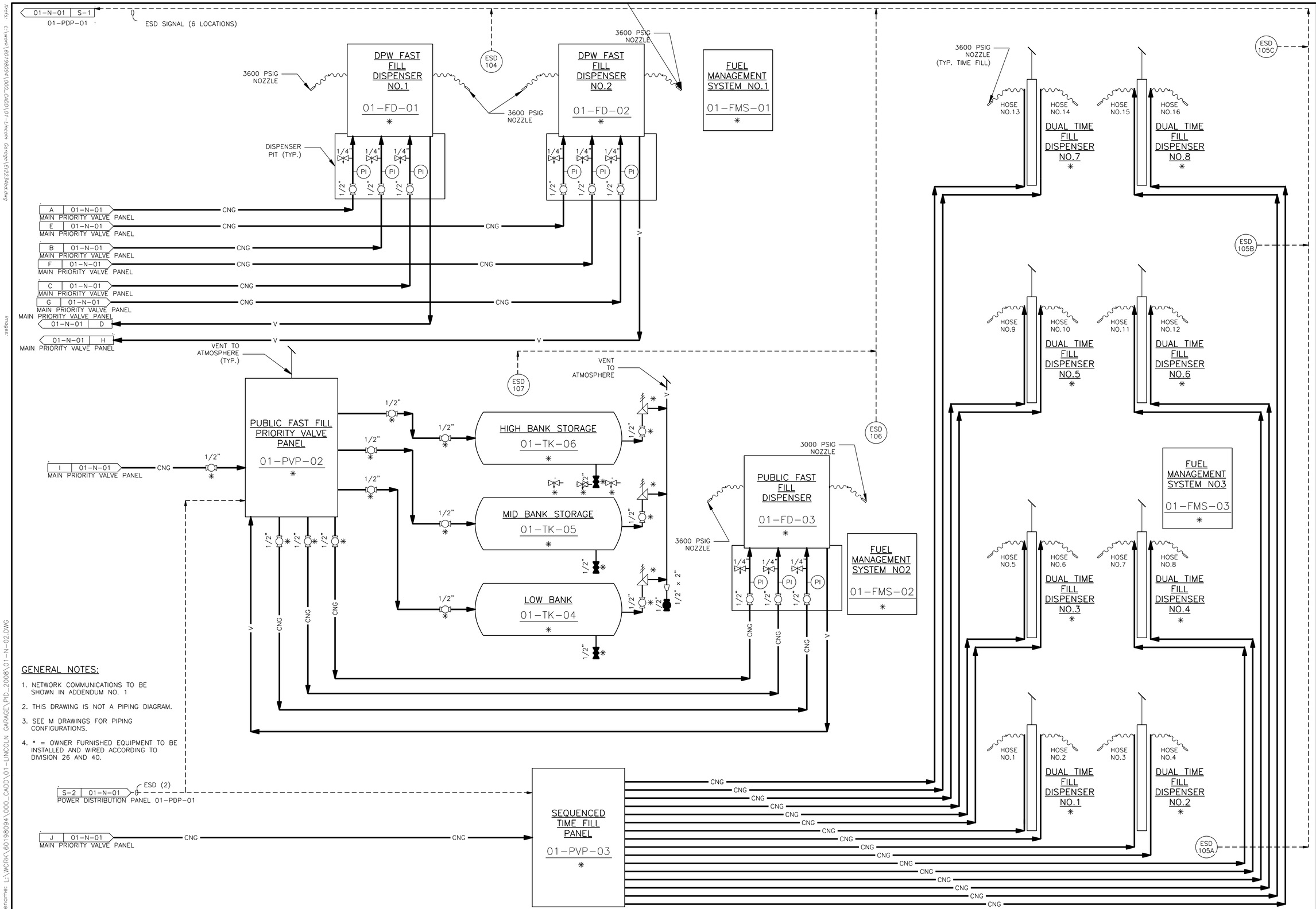

GENERAL NOTES:

1. NETWORK COMMUNICATIONS TO BE SHOWN IN ADDENDUM NO. 1
2. THIS DRAWING IS NOT A PIPING DIAGRAM.
3. SEE M DRAWINGS FOR PIPING CONFIGURATIONS.
4. * = OWNER FURNISHED EQUIPMENT TO BE INSTALLED AND WIRED ACCORDING TO DIVISION 26 AND 40.

NO	REVISIONS	DRN	CHK	DATE
A	ISSUED FOR BID	DRH	BKL	05/31/11

DRN	DRH	MAY 2011
DES	DRH	MAY 2011
CHK	BKL	MAY 2011
APP	BKL	MAY 2011

AECOM
4135 TECHNOLOGY PARKWAY
SHEBOYGAN, WI 53083-1883
T 920.458.8711 F 920.458.0537
WWW.AECOM.COM

COMPRESSED NATURAL GAS FUELING SYSTEMS
LINCOLN GARAGE SITE
MILWAUKEE, WISCONSIN

PROCESS AND INSTRUMENTATION
CNG STORAGE AND DISPENSING

DATE	MAY 2011
PROJECT NO	60198094
FILENAME	01-N-02.dwg
FILE NO	
SHEET NO	11
DRAWING NO	01-N-02

Plotted By: hansmannb
Plot File Date Created: May/28/2011 7:34 AM
Layout-Sheet Name: 01-N-02
Filename: L:\WORK\60198094\000_CADD\01-LINCOLN GARAGE\PID_2008\01-N-02.DWG

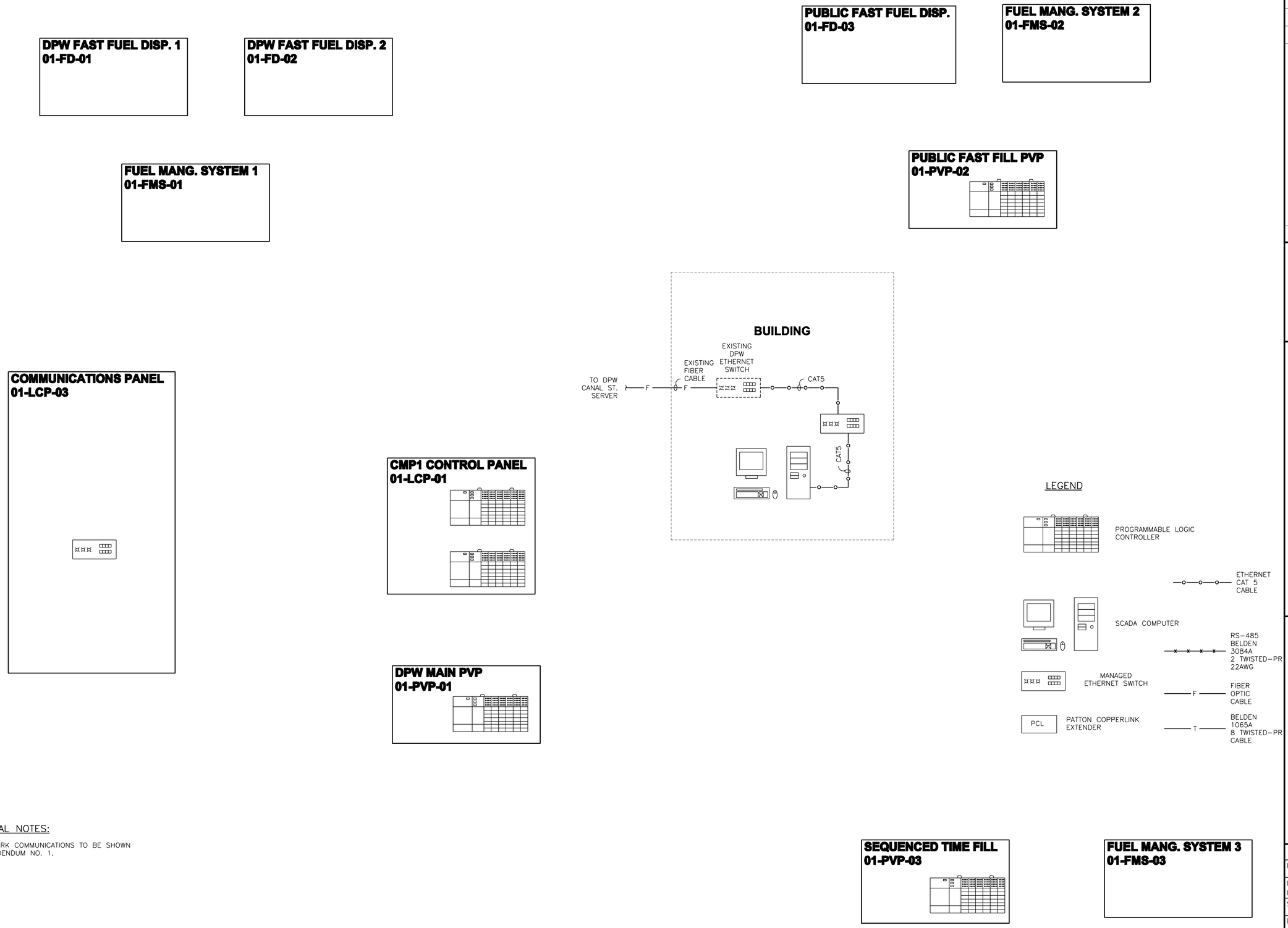

GENERAL NOTES:

1. NETWORK COMMUNICATIONS TO BE SHOWN IN ADDENDUM NO. 1.

NO	REVISIONS	DRN	CHK	DATE
A	ISSUED FOR BID	DRH	BKL	05/31/11

DRN	DRH	MAY 2011
DES	DRH	MAY 2011
CHK	BKL	MAY 2011
APP	BKL	MAY 2011

AECOM
4135 TECHNOLOGY PARKWAY
SHEBOYGAN, WI 53083-1883
T 920.458.8711 F 920.458.0537
WWW.AECOM.COM

COMPRESSED NATURAL GAS FUELING SYSTEMS
LINCOLN GARAGE & NORTHWEST GARAGE
MILWAUKEE, WISCONSIN

LINCOLN GARAGE NETWORK DIAGRAM

DATE	MAY 2011
PROJECT NO	60198094
FILENAME	01-N-03.dwg
FILE NO	---
SHEET NO	12
DRAWING NO	01-N-03

Plotted By: haused
Plot File Date Created: May/26/2011 4:20 PM
Layout-Sheet Name: 01-N-03
Filename: L:\WORK\60198094\000_CADD\01-LINCOLN GARAGE\PID_2008\01-N-03.DWG
Images:
Xrefs: L:\work\60198094\000_CADD\00-General & 99-Standard Details\E12234bd.dwg

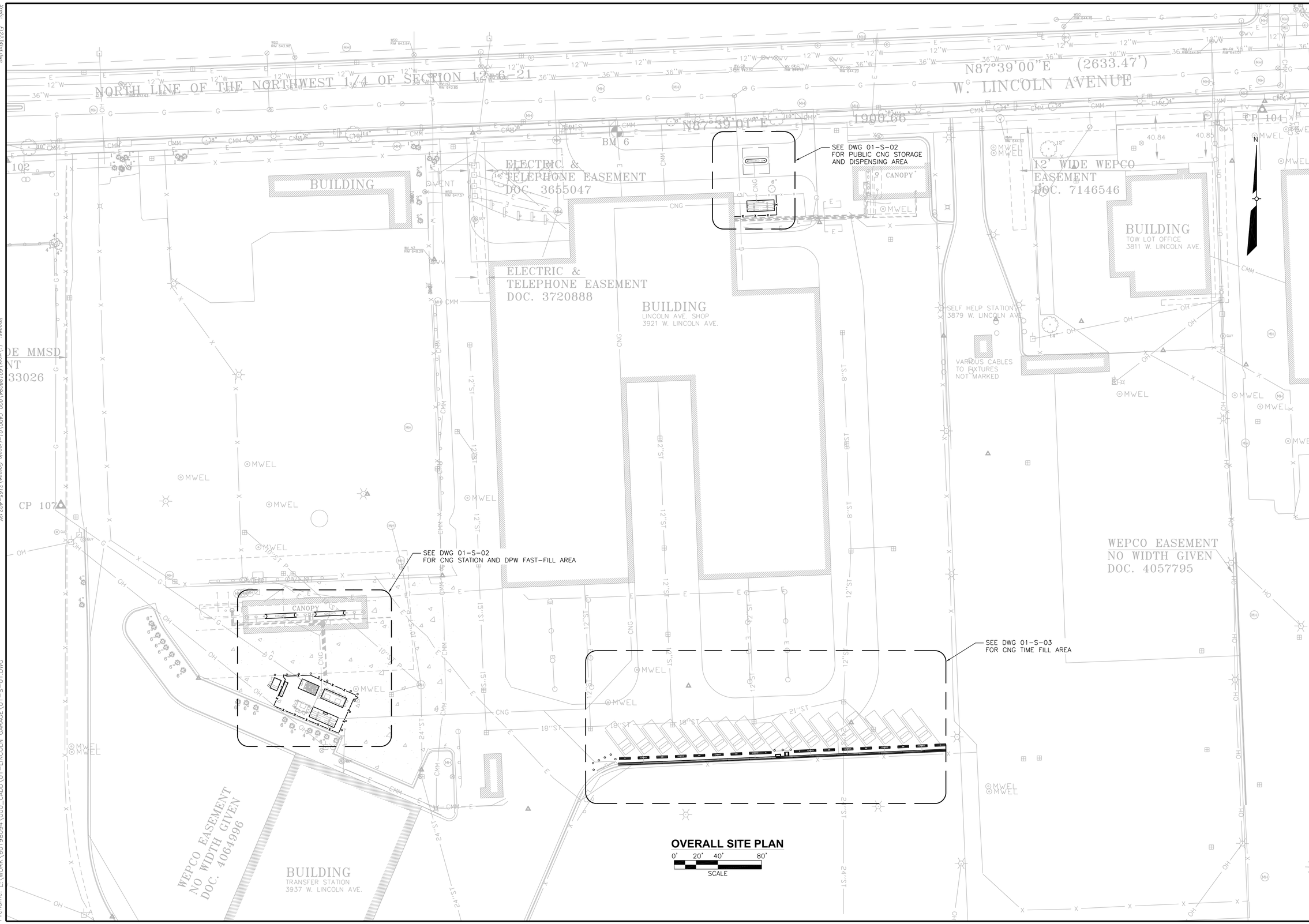

OVERALL SITE PLAN

0' 20' 40' 80'
SCALE

NO	REVISIONS	DRN	CHK	DATE
A	ISSUED FOR BID	BEH	BKL	05/31/11

DRN	BEH	MAY 2011
DES	BKL	MAY 2011
CHK		MAY 2011
APP	BKL	MAY 2011

AECOM
4135 TECHNOLOGY PARKWAY
SHEBOYGAN, WI 53083-1883
T 920.458.8711 F 920.458.0537
WWW.AECOM.COM

COMPRESSED NATURAL GAS FUELING SYSTEMS
LINCOLN GARAGE SITE
MILWAUKEE, WISCONSIN

STRUCTURAL OVERALL SITE PLAN

DATE	MAY 2011
PROJECT NO	60198094
FILENAME	01-S-01.dwg
FILE NO	
SHEET NO	13
DRAWING NO	01-S-01

Plotted By: hansmannb
Plot File Date Created: May/28/2011 5:20 PM
Layout-Sheet Name: LAYOUT
Filename: L:\WORK\60198094\000_CADD\01-LINCOLN GARAGE\01-S-01.DWG

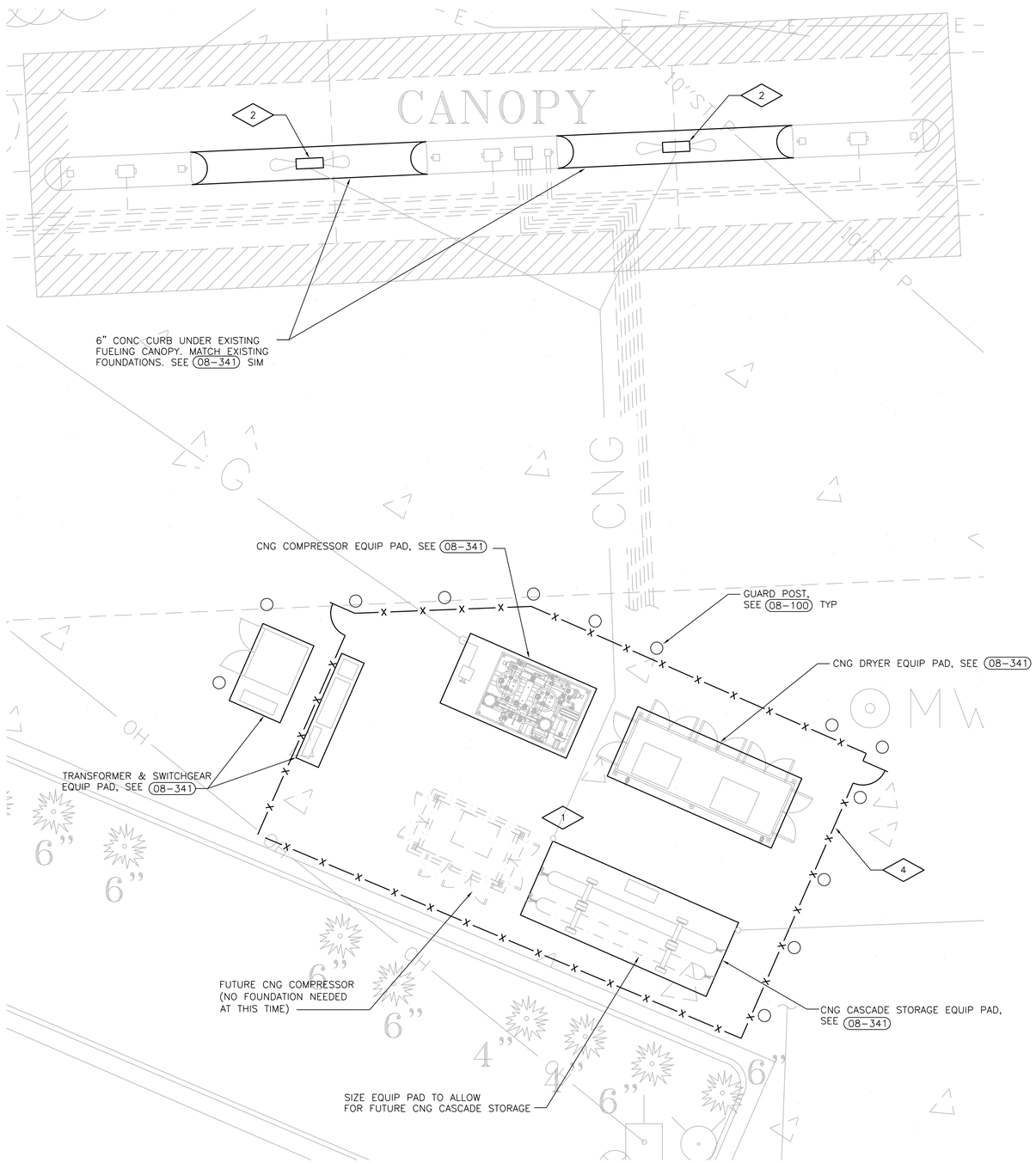

CNG STATION AND DPW FAST FILL AREA

0' 4' 8' 16'
SCALE

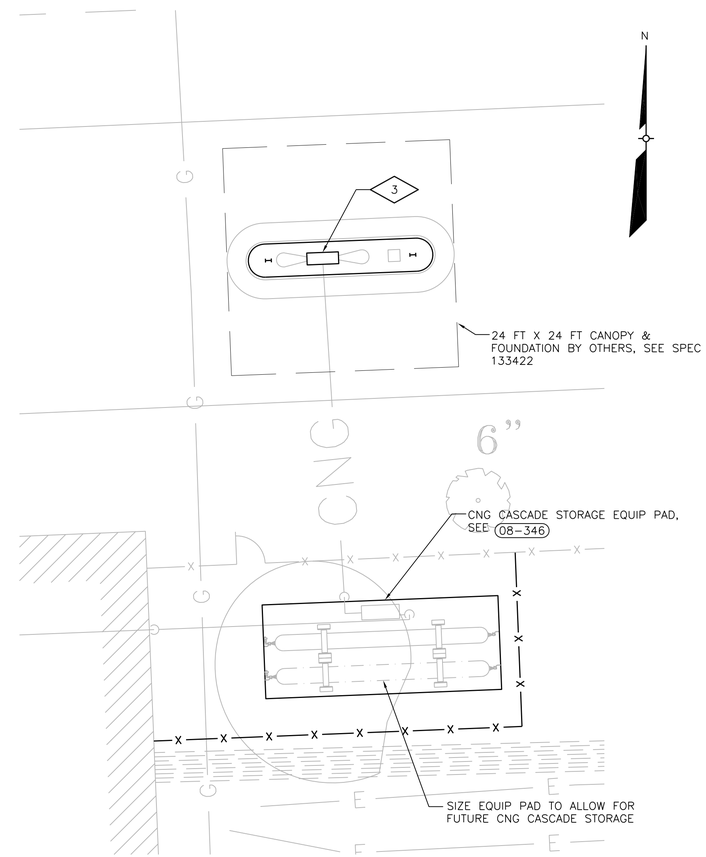

PUBLIC CNG STORAGE AND DISPENSING AREA

0' 4' 8' 16'
SCALE

GENERAL NOTES

1. FIELD VERIFY ALL EXISTING DIMENSIONS AND ELEVATIONS.
2. CONTRACTOR TO COORDINATE EQUIPMENT PAD SIZES WITH EQUIPMENT SUPPLIER.

PLAN NOTES

1. PLACE EQUIPMENT PADS ON EXISTING CONCRETE PAVEMENT.
2. INSTALL NEW PIT FRAME FOR CNG DISPENSER. SAWCUT AND REMOVE EXISTING CONC PAVEMENT AS REQUIRED FOR PIT FRAME INSTALLATION, SEE 06-010 .
3. INSTALL NEW PIT FRAME FOR CNG DISPENSER. SEE DWG 01-C-02 AND 06-010 .
4. CORE EXISTING 9" CONC PAVEMENT AS REQUIRED FOR INSTALLATION OF NEW FENCE AND FENCE POSTS.

NO	REVISIONS	DRN	CHK	DATE
A	ISSUED FOR BID	BEH	BKL	05/31/11

DRN	BEH	MAY 2011
DES	KAG	MAY 2011
CHK		MAY 2011
APP	BKL	MAY 2011

AECOM
4135 TECHNOLOGY PARKWAY
SHEBOYGAN, WI 53083-1883
T 920.458.8711 F 920.458.0537
WWW.AECOM.COM

COMPRESSED NATURAL GAS FUELING SYSTEMS
LINCOLN GARAGE SITE
MILWAUKEE, WISCONSIN

STRUCTURAL FOUNDATIONS

DATE	MAY 2011
PROJECT NO	60198094
FILENAME	01-S-02.dwg
FILE NO	
SHEET NO	14
DRAWING NO	01-S-02

Plotted By: hansmannb
Plot File Date Created: May/28/2011 5:21 PM
Layout-Sheet Name: LAYOUT
Filename: L:\WORK\60198094\000_CADD\01-LINCOLN GARAGE\01-S-02.DWG

CNG TIME FILL AREA

0' 16' 32'
SCALE

PLAN NOTES

1. 20'-0" CONCRETE BARRIER RAIL TYPE K, TYP OF 16. POSITION TIGHT AGAINST EXISTING CURB. SEE 06-030
2. 20'-0" CONCRETE BARRIER RAIL TYPE K. USED AS PARKING BUFFER. MAINTAIN 3'-0" WALKWAY FOR DRIVERS TO ACCESS CARD READER. SEE 06-030
3. 10'-0" CONCRETE BARRIER RAIL TYPE K, TYP OF 15. USED AS PARKING BUFFER. MAINTAIN 3'-0" WALKWAY FOR DRIVERS TO ACCESS CARD READER. SEE 06-030

CNG TIME FILL AREA

0' 16' 32'
SCALE

NO	REVISIONS	DRN	CHK	DATE
A	ISSUED FOR BID	BEH	BKL	05/31/11

DRN	BEH	MAY 2011
DES	KAG	MAY 2011
CHK		MAY 2011
APP	BKL	MAY 2011

AECOM
4135 TECHNOLOGY PARKWAY
SHEBOYGAN, WI 53083-1883
T 920.458.8711 F 920.458.0537
WWW.AECOM.COM

COMPRESSED NATURAL GAS FUELING SYSTEMS
LINCOLN GARAGE SITE
MILWAUKEE, WISCONSIN

STRUCTURAL
CNG TIME FILL AREA

DATE	MAY 2011
PROJECT NO	60198094
FILENAME	01-S-03.dwg
FILE NO	
SHEET NO	15
DRAWING NO	01-S-03

Xrefs: E12234bd.dwg
L:\work\60198094\000_CADD\01-Lincoln Garage\SURVEY\Kapur\Boundary-Topo.dwg
L:\work\60198094\000_CADD\01-Lincoln Garage\RECOVERED PROJECTS\1994 - Transfer Station - HNTB\CIVIL\DRAFT\C-FAC-01-N.dwg
L:\work\60198094\000_CADD\01-Lincoln Garage\C-FAC-01-N.dwg
L:\work\60198094\000_CADD\01-Lincoln Garage\CIVIL\29193.dwg

Images: L:\work\60198094\000_CADD\01-Lincoln Garage\2165-402.tif
L:\work\60198094\000_CADD\01-Lincoln Garage\2165-404.tif
L:\work\60198094\000_CADD\01-Lincoln Garage\88-5-C.tif
L:\work\60198094\000_CADD\01-Lincoln Garage\FIGURES\3921WLincolnAve_Milwaukee.jpg

Plotted By: hansmannb
Plot File Date Created: May/27/2011 9:39 PM
Layout-Sheet Name: LAYOUT
Filename: L:\WORK\60198094\000_CADD\01-LINCOLN GARAGE\01-S-03.DWG

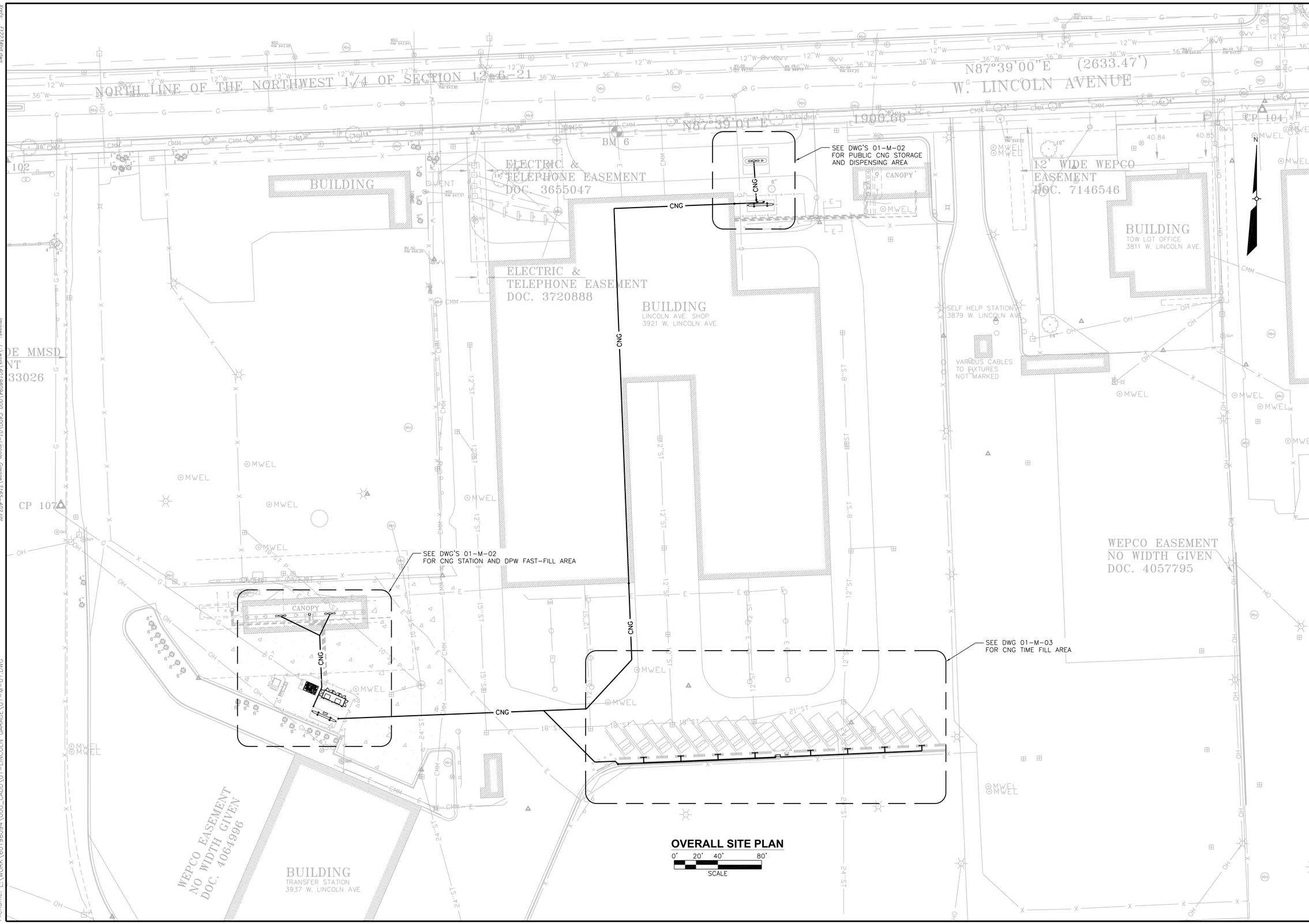

OVERALL SITE PLAN

0' 20' 40' 80'
SCALE

NO	REVISIONS	DRN CHK	DATE
A	ISSUED FOR BID	BEH BKL	05/31/11

DRN	BEH	MAY 2011
DES	BKL	MAY 2011
CHK		MAY 2011
APP	BKL	MAY 2011

AECOM
4135 TECHNOLOGY PARKWAY
SHEBOYGAN, WI 53083-1883
T 920.458.8711 F 920.458.0537
WWW.AECOM.COM

COMPRESSED NATURAL GAS FUELING SYSTEMS
LINCOLN GARAGE SITE
MILWAUKEE, WISCONSIN

PROCESS
OVERALL SITE PLAN

DATE	MAY 2011
PROJECT NO	60198094
FILENAME FILE NO	01-M-01.dwg
SHEET NO	16
DRAWING NO	01-M-01

Plotted By: hansmannb
Plot File Date Created: May/28/2011 5:21 PM
Layout-Sheet Name: LAYOUT
Filename: L:\WORK\60198094\000_CADD\01-LINCOLN GARAGE\01-M-01.DWG

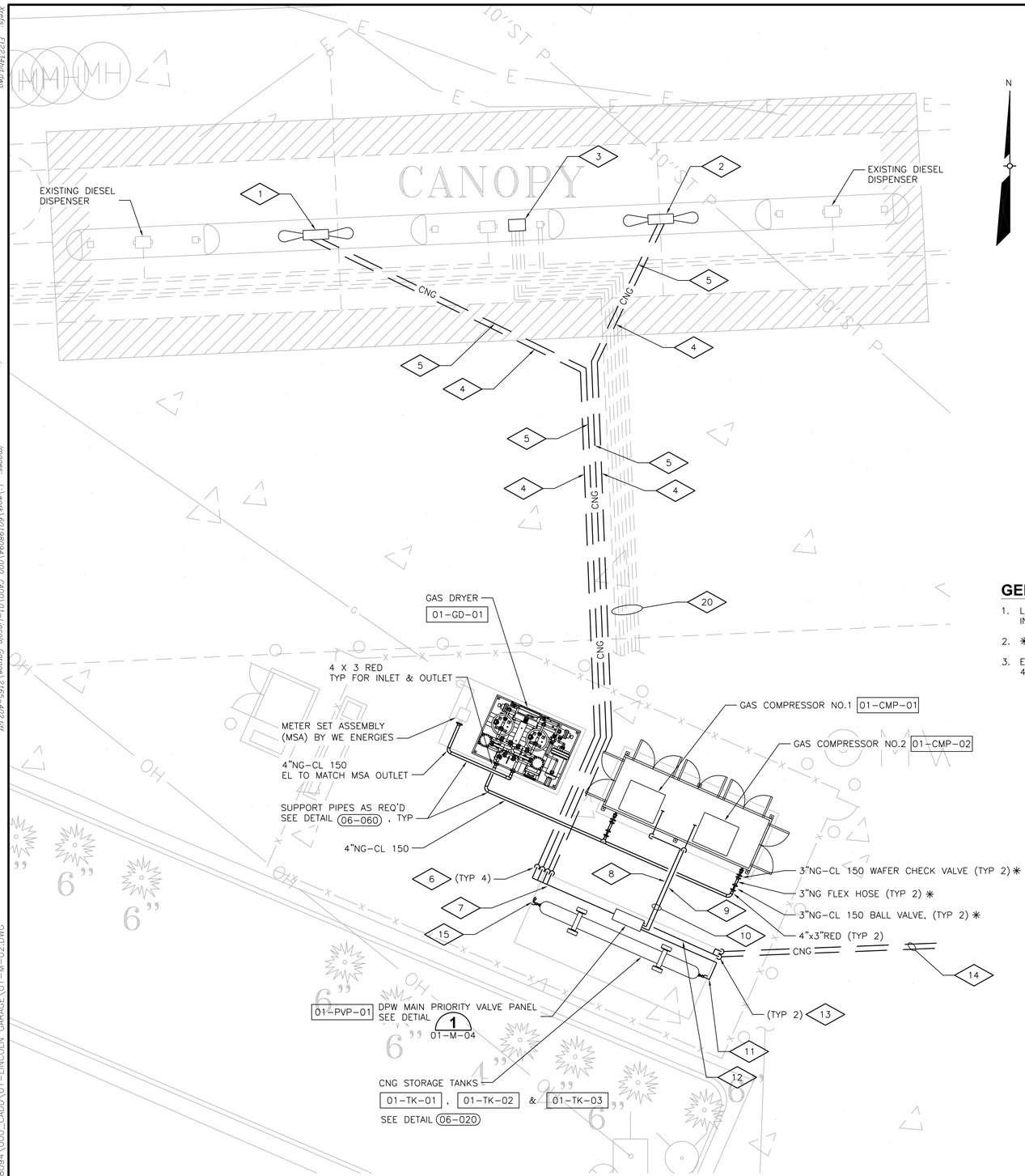

CNG STATION AND DPW FAST FILL AREA

0' 4' 8' 16'
SCALE

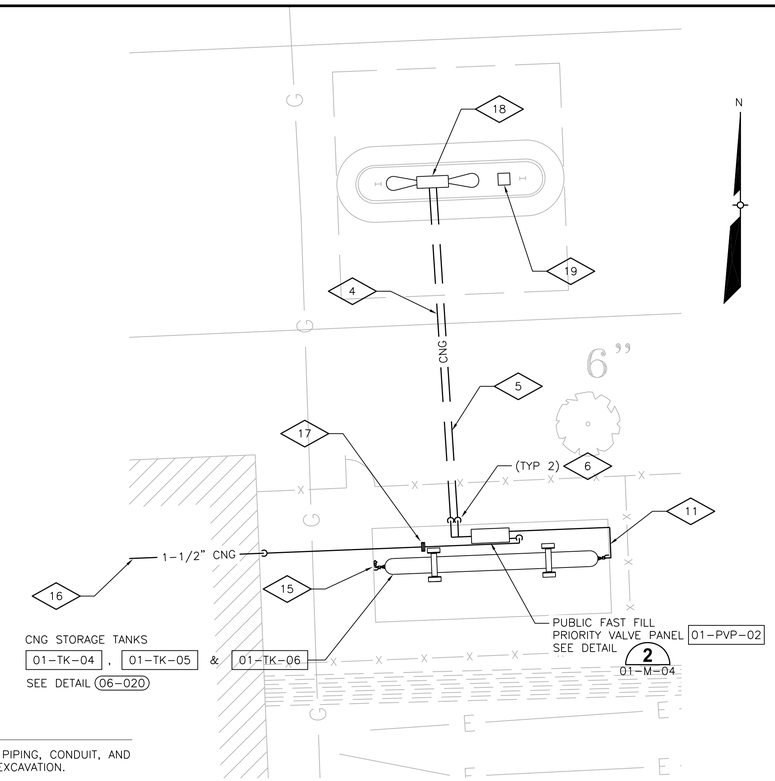

PUBLIC CNG STORAGE AND DISPENSING AREA

0' 4' 8' 16'
SCALE

GENERAL NOTES

1. LOCATE ALL EXISTING UNDERGROUND PIPING, CONDUIT, AND INFRASTRUCTURE PRIOR TO TRENCH EXCAVATION.
2. ✳ INDICATES FURNISHED BY ANGI SHIPPED LOOSE.
3. EAGGED EQUIPMENT FURNISHED BY OWNER PER DIVIDSION 40 SPECIFIACTIONS.

PLAN NOTES

1. INSTALL NEW FAST FILL DISPENSER 01-FD-01 (FURNISHED BY ANGI). SEE DETAIL 06-010 .
2. INSTALL NEW FAST FILL DISPENSER 01-FD-02 (FURNISHED BY ANGI). SEE DETAIL 06-010 .
3. INSTALL NEW "ASSET WORKS" FUEL FOCUS RF, 12-HOSE, ISLAND CONTROL UNIT (ICU), 01-FMS-01 (FURNISHED BY OWNER), AFTER REMOVAL OF EXISTING "MAXIMUS" FUEL FOCUS ICU.
4. PROVIDE (3) PARALLEL RUNS OF 1/2"X0.065" SA TYPE 316 SS CONTINUOUS COIL TUBING INSIDE SINGLE 4" HDPE OR PVC SLEEVE TO DISPENSER. SEE TRENCH DETAIL 06-070 .
5. PROVIDE (4) PARALLEL RUNS OF1/2"X0.065" SA TYPE 316 SS CONTINUOUS COIL TUBING INSIDE SINGLE 4" HDPE OR PVC SLEEVE TO DISPENSER (ONE RUN IS FOR VENT). SEE TRENCH DETAIL 06-070 .
6. PROVIDE UNDERGROUND RISER PER DETAIL 06-050 .
7. PROVIDE THREE 3/4"X 0.109" SA 213 TYPE 316 SS TUBING (WITH REDUCERS AT VALVES) FROM PRIORITY VALVE PANEL TO CNG VESSELS.
8. PROVIDE 3/4"X 0.109" SA 213 TYPE 316 SS TUBE (STRAIGHT). ROUTE AT EL. 8'-0" ABOVE GRADE FROM 01-CMP-01 DISCHARGE TO 01-PVP-01 (SEE DETAIL 06-040)
9. PROVIDE 3/4"X 0.109" SA 213 TYPE 316 SS TUBE (STRAIGHT). ROUTE AT EL. 8'-0" ABOVE GRADE FROM 01-CMP-02 DISCHARGE TO 01-PVP-01 (SEE DETAIL 06-040)
10. PROVIDE 304 SS UNISTRUT SUPPORTS AND PIPE RACK AS REQUIRED.
11. PROVIDE THREE 3/4"X 0.109" SA 213 TYPE 316 SS TUBING (WITH REDUCERS AT VALVES) FROM PRIORITY VALVE PANEL TO CNG VESSELS.
12. PROVIDE 3/4"X 0.109" SA 213 TYPE 316 TUBING (WITH REDUCER AT PANEL VALVES) FROM 01-PVP-01 TO UNDERGROUND RISER FOR ROUTING TO 01-PVP-02 AND 01-PVP-03 .
13. PROVIDE UNDERGROUND RISER PER DETAIL 06-050 .
14. PROVIDE TWO (2) SETS OF THREE (3) PARALLEL RUNS OF 1/2"X0.065" SA TYPE 316 SS CONTINUOUS COIL TUBING. INSTALL EACH SET OF TUBING INSIDE SINGLE 4" HDPE OR PVC SLEEVE. SEE TRENCH DETAIL 06-070 OR 10-450 .
15. SEE VENT MANIFOLD DETAIL 06-020 .
16. PROVIDE 1-1/2" SCH 160 CARBON STEEL CNG PIPING ROUTED OVER ROOF OF GARAGE. SEE 01-C-01 FOR CONTINUATION.
17. PROVIDE 1-1/2" SCH 160 CARBON STEEL CNG PIPING EL 10'-0" ABOVE GRADE TO 01-PVP-02. PROVIDE 1-1/2" 2500 CLASS FLANGE WITH INSULATION KIT FOR TRANSITION TO 1/2" X 0.065" SA 213 TYPE 316 SS TUBING AT INLET BALL VALVE (FEMALE PORT ON VALVE BY ANGI). SUPPORT PIPING FROM STORAGE SADDLE BRACKET.
18. INSTALL FAST FILL DISPENSER 01-FD-03 (FURNISHED BY ANGI). SEE DETAIL 06-010 .
19. INSTALL NEW "ASSET WORKS" FUEL FOCUS ISLAND CONTROL UNIT (ICU), 01-FMS-02 (FURNISHED BY OWNER).
20. POSSIBLE LOCATION OF SEVEN (7) EXISTING 1"PVC COMMUNICATION AND 120V POWER CONDUITS.

NO	REVISIONS	BEH BKL	DRN CHK	DATE
A	ISSUED FOR BID			05/31/11

DRN	BEH	MAY 2011
DES	JJB	MAY 2011
CHK		MAY 2011
APP	BKL	MAY 2011

AECOM
4135 TECHNOLOGY PARKWAY
SHEBOYGAN, WI 53083-1883
T 920.458.8711 F 920.458.0537
WWW.AECOM.COM

COMPRESSED NATURAL GAS FUELING SYSTEMS
LINCOLN GARAGE SITE
MILWAUKEE, WISCONSIN

PROCESS AREAS

DATE	MAY 2011
PROJECT NO	60198094
FILENAME FILE NO	01-M-02.dwg
SHEET NO	17
DRAWING NO	01-M-02

Xrefs: E12234bd.dwg
L:\work\60198094\000_CADD\01-Lincoln Garage\SURVEY\kapu\Boundary-Topo.dwg
L:\work\60198094\000_CADD\01-Lincoln Garage\RECOVERED PROJECTS\1994 - Transfer Station - HWTB\CIVIL\DRAWINGS\Base\Base-Site.dwg
L:\work\60198094\000_CADD\01-Lincoln Garage\C-FAC-01-N.dwg
L:\work\60198094\000_CADD\01-Lincoln Garage\CIVIL\29193.dwg
Images: L:\work\60198094\000_CADD\01-Lincoln Garage\2165-402.tif
L:\work\60198094\000_CADD\01-Lincoln Garage\2165-404.tif
L:\work\60198094\000_CADD\01-Lincoln Garage\86-5-C14.tif
L:\work\60198094\000_CADD\01-Lincoln Garage\FIGURE3-1992WLincolnAveMilwaukee.jpg
Plotted By: hansmannb
Plot File Date Created: May/28/2011 2:51 PM
Layout-Sheet Name: LAYOUT
Filename: L:\WORK\60198094\000_CADD\01-LINCOLN GARAGE\01-M-02.DWG

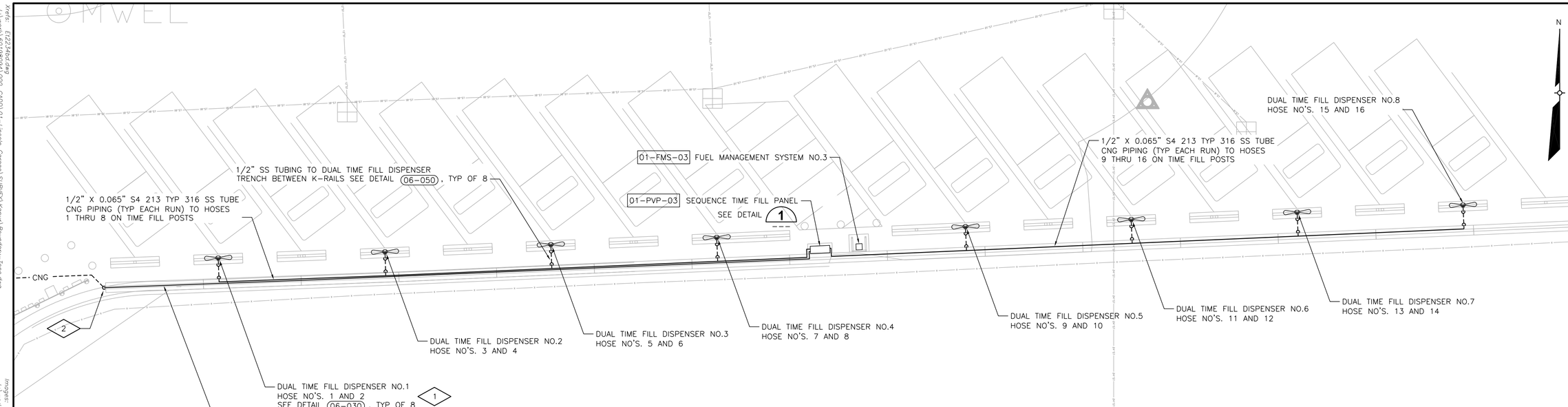

CNG TIME FILL AREA

0' 16' 32'
SCALE

PLAN NOTES

1. DUAL TIME FILL DISPENSER WITH 20' HOSE LENGTH AND 34' SPACING BETWEEN POSTS.
2. PROVIDE UNDERGROUND RISER PER DETAIL 06-050 .

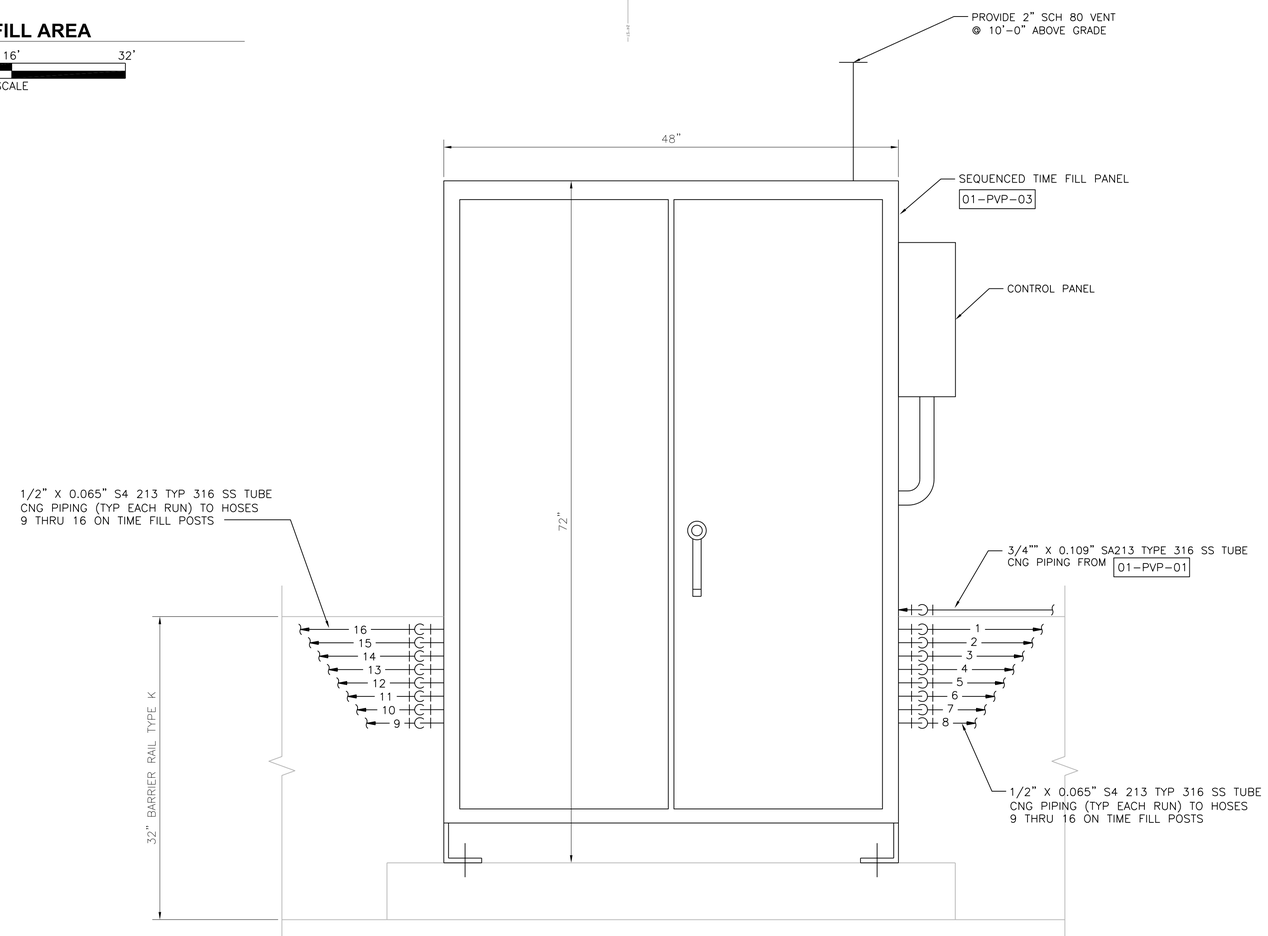

SEQUENCED TIME FILL PANEL DETAIL 1

NTS ---

NO	REVISIONS	BEH	BKL	05/31/11
A	ISSUED FOR BID	DRN	CHK	DATE

DRN	BEH	MAY 2011
DES	JJB	MAY 2011
CHK		MAY 2011
APP	BKL	MAY 2011

AECOM
4135 TECHNOLOGY PARKWAY
SHEBOYGAN, WI 53083-1883
T 920.458.8711 F 920.458.0537
WWW.AECOM.COM

COMPRESSED NATURAL GAS FUELING SYSTEMS
LINCOLN GARAGE SITE
MILWAUKEE, WISCONSIN

PROCESS
CNG TIME FILL AREA

DATE	MAY 2011
PROJECT NO	60198094
FILENAME	01-M-03.dwg
FILE NO	
SHEET NO	18
DRAWING NO	01-M-03

Xrefs: E122340d.dwg
L:\work\60198094\000_CADD\01-Lincoln Garage\SURVEY\kapur\Boundary-Topo.dwg
L:\work\60198094\000_CADD\01-Lincoln Garage\2165-402.tif
L:\work\60198094\000_CADD\01-Lincoln Garage\RECOVERED PROJECTS\1994 - Transfer Station - HVTB\CIVIL\DRAWINGS\32.1Wincofake_Milwaukee.jpg
C-FAC-01-N.dwg
L:\work\60198094\000_CADD\01-Lincoln Garage\CIVIL\29193.dwg
Images: L:\work\60198094\000_CADD\01-Lincoln Garage\2165-402.tif
L:\work\60198094\000_CADD\01-Lincoln Garage\2165-404.tif
L:\work\60198094\000_CADD\01-Lincoln Garage\BBL-5-C-11.tif
L:\work\60198094\000_CADD\01-Lincoln Garage\FIGURES\32.1Wincofake_Milwaukee.jpg
Plotted By: hansmannb
Plot File Date Created: May/28/2011 10:42 AM
Layout-Sheet Name: LAYOUT
Filename: L:\WORK\60198094\000_CADD\01-LINCOLN GARAGE\01-M-03.DWG

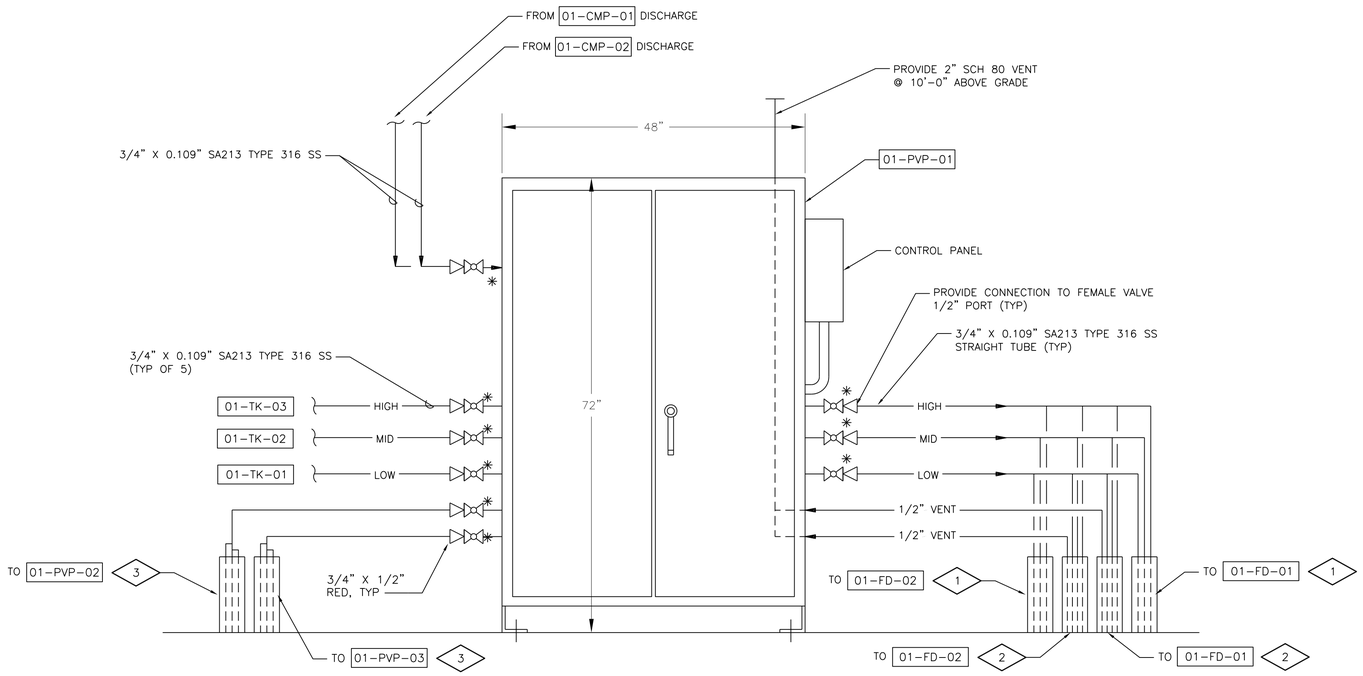

✳ 1/2" BALL VALVES (FEMALE PORT) FURNISHED BY ANGI WITH PANEL

MAIN PRIORITY VALVE PANEL DETAIL 1

NTS 10-M-02

PLAN NOTES

1. PROVIDE (3) PARALLEL RUNS OF 1/2"X0.065" SA TYPE 316 SS CONTINUOUS COIL TUBING INSIDE SINGLE 4" HDPE OR PVC SLEEVE TO DISPENSER. SEE DETAIL 06-050.
2. PROVIDE (4) PARALLEL RUNS OF1/2"X0.065" SA TYPE 316 SS CONTINUOUS COIL TUBING INSIDE SINGLE 4" HDPE OR PVC SLEEVE TO DISPENSER (ONE RUN IS FOR VENT). SEE DETAIL 06-050.
3. PROVIDE TWO (2) SETS OF THREE (3) PARALLEL RUNS OF 1/2"X0.065" SA TYPE 316 SS CONTINUOUS COIL TUBING. INSTALL EACH SET OF TUBING INSIDE SINGLE 4" HDPE OR PVC SLEEVE. SEE DETAIL 06-050.

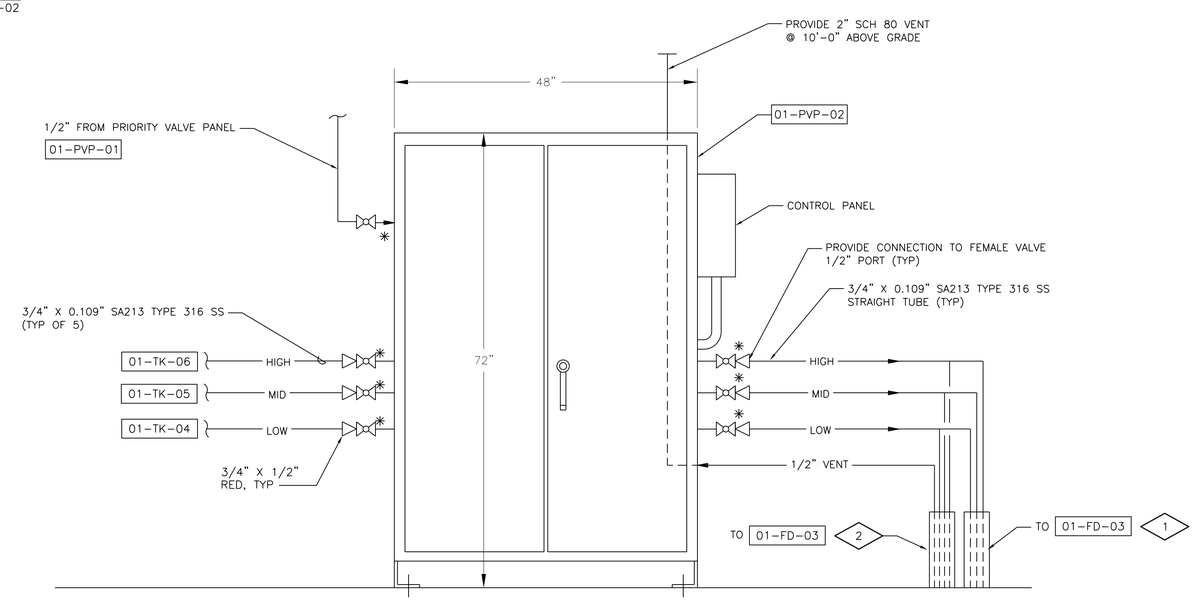

✳ 1/2" BALL VALVES (FEMALE PORT) FURNISHED BY ANGI WITH PANEL

PUBLIC FAST FILL PRIORITY VALVE PANEL DETAIL 2

NTS 10-M-02

NO	REVISIONS	DRN	CHK	DATE
A	ISSUED FOR BID	BEH	BKL	05/31/11

DRN	BEH	MAY 2011
DES	JJB	MAY 2011
CHK		MAY 2011
APP	BKL	MAY 2011

AECOM
4135 TECHNOLOGY PARKWAY
SHEBOYGAN, WI 53083-1883
T 920.458.8711 F 920.458.0537
WWW.AECOM.COM

COMPRESSED NATURAL GAS FUELING SYSTEMS
LINCOLN GARAGE SITE
MILWAUKEE, WISCONSIN

PROCESS
CNG TIME FILL AREA

DATE MAY 2011
PROJECT NO 60198094
FILENAME 01-M-04.dwg
FILE NO
SHEET NO 19
DRAWING NO **01-M-04**

Xrefs: E12234bd.dwg
Images:
Plotted By: hansmannb
Plot File Date Created: May/28/2011 2:44 PM
Layout-Sheet Name: LAYOUT
Filename: L:\WORK\60198094\000_CADD\01-LINCOLN GARAGE\01-M-04.DWG

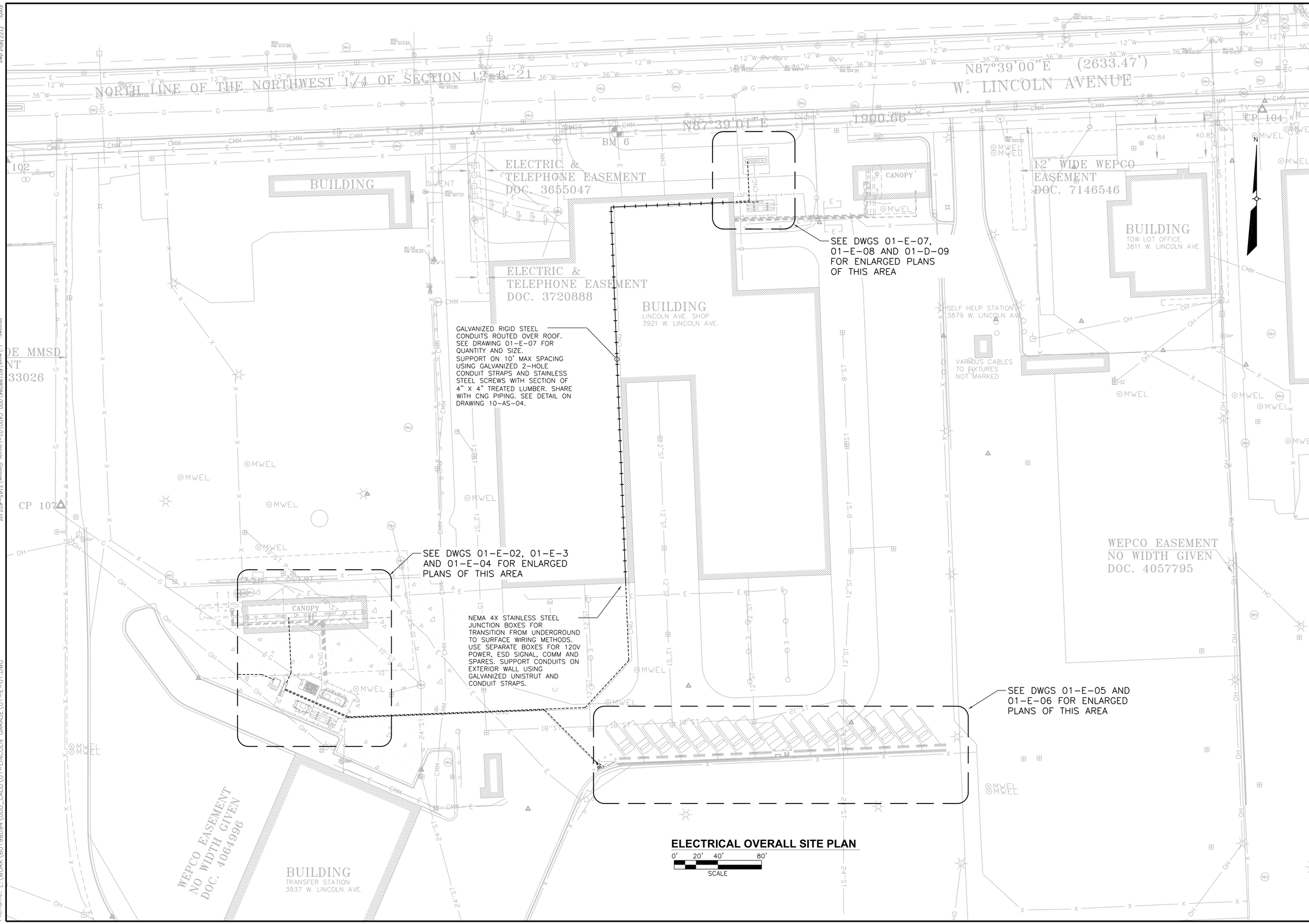

ELECTRICAL OVERALL SITE PLAN

NO	REVISIONS	DRN	CHK	DATE

DRN	DMK	MAY 2011
DES	DMK	MAY 2011
CHK	EDM	MAY 2011
APP	BKL	MAY 2011

AECOM
4135 TECHNOLOGY PARKWAY
SHEBOYGAN, WI 53083-1883
T 920.458.8711 F 920.458.0537
WWW.AECOM.COM

COMPRESSED NATURAL GAS FUELING SYSTEMS
LINCOLN GARAGE SITE
MILWAUKEE, WISCONSIN

ELECTRICAL OVERALL SITE PLAN

DATE	MAY 2011
PROJECT NO	60198094
FILENAME	01-E-01.dwg
FILE NO	
SHEET NO	20
DRAWING NO	01-E-01

Plotted By: hansmannb
Plot File Date Created: May/28/2011 10:45 AM
Layout-Sheet Name: LAYOUT
Filename: L:\WORK\60198094\000_CADD\01-LINCOLN GARAGE\01-E-01.DWG

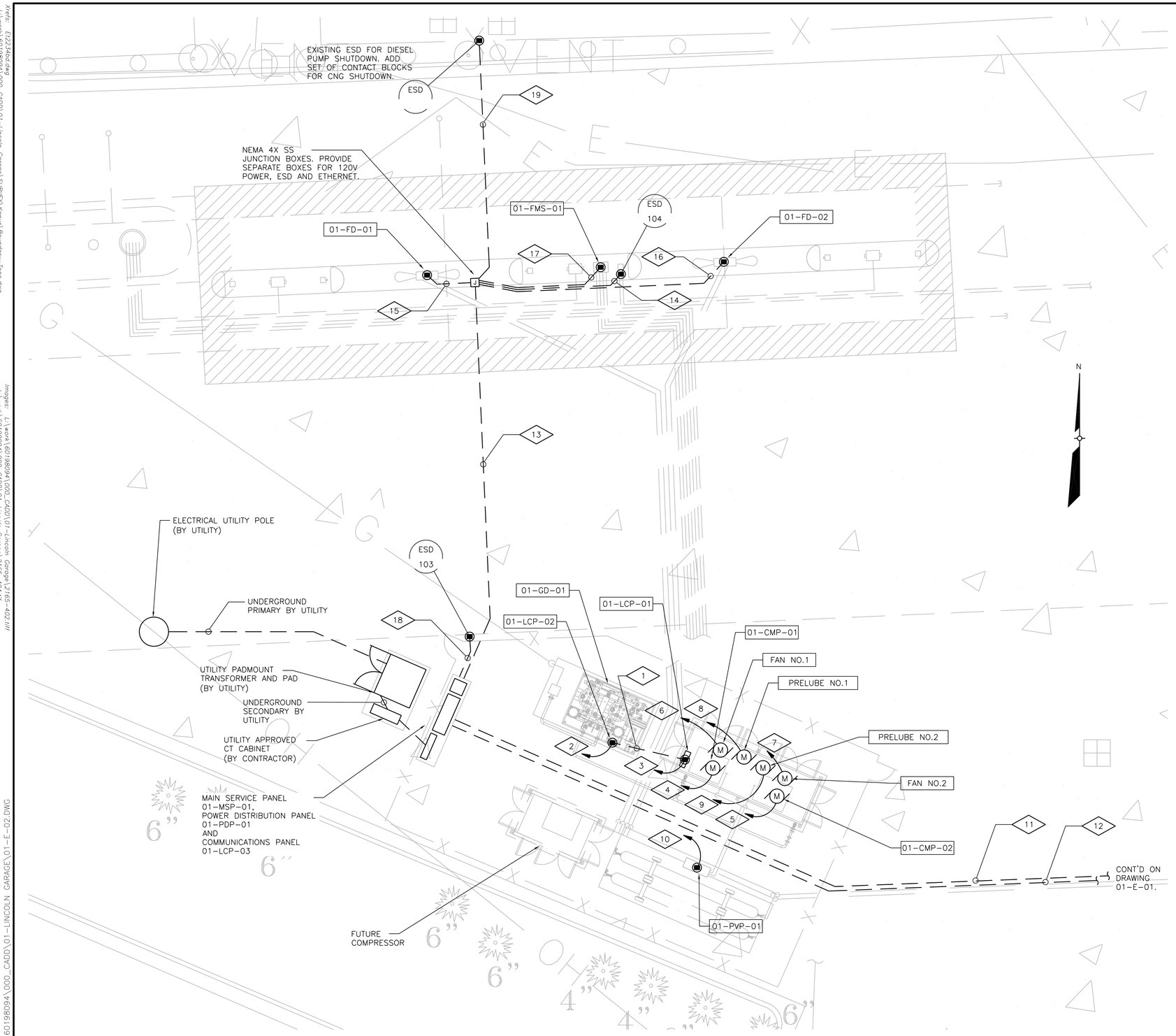

CNG STATION AND DPW FAST-FILL AREA

0' 4' 8' 16'
SCALE

GENERAL NOTES

1. FOR ELECTRICAL OVERALL SITE PLAN, SEE DRAWING 01-E-01.
2. FOR ONE-LINE DIAGRAM, SEE DRAWING 01-E-10.
3. FOR GROUNDING, SEE DRAWING 01-E-03.
4. FOR HAZARDOUS CLASSIFICATIONS, SEE DRAWING 01-E-04.
5. SEE DIESEL FUELING STATION RECORD DRAWINGS FOR LOCATIONS OF UNDERGROUND UTILITIES AND STRUCTURES.
6. FOR GAS PIPING/ELECTRICAL CONDUIT, SEE DETAIL (10-450).

PLAN NOTES

1. 1-COMM CABLE TBD, 1" GRS, 01-LCP-01 TO 01-LCP-02
2. 3#10, 1#10 GRD, 1" SCHEDULE 80 PVC, 01-LCP-02 480V POWER, FROM 01-PDP-01
   2#14, 1#14 GRD, 1" SCHEDULE 80 PVC, ESD SHUTDOWN, 01-PDP-01 TO 01-LCP-02
   1-COMM CABLE TBD, 1" GRS, 01-LCP-02 TO 01-LCP-03
3. 2#12, 1#12 GRD, 01-LCP-01 120V POWER, FROM 01-PDP-01
   2#12, 1#12 GRD, ENCLOSURE LIGHT/HEAT 120V POWER, FROM 01-PDP-01 } 1" SCH 80 PVC
   6#14, 1#14 GRD, 1" SCHEDULE 80 PVC, ESD SIGNALS, 01-LCP-01 TO 01-PDP-01
   1-COMM CABLE TBD, 1" GRS, 01-LCP-01 TO 01-LCP-03
4. 3#500 KCMIL, 1#1 GRD, 3" SCHEDULE 80 PVC, 01-CMP-01 480V POWER, FROM 01-PDP-01
5. 3#500 KCMIL, 1#1 GRD, 3" SCHEDULE 80 PVC, 01-CMP-02 480V POWER, FROM 01-PDP-01
6. 3#12, 1#12 GRD, 1" SCHEDULE 80 PVC, FAN NO. 1 480V POWER, FROM 01-PDP-01
7. 3#12, 1#12 GRD, 1" SCHEDULE 80 PVC, FAN NO. 2 480V POWER, FROM 01-PDP-01
8. 3#12, 1#12 GRD, 1" SCHEDULE 80 PVC, PRELUBE NO. 1 480V POWER, FROM 01-PDP-01
9. 3#12, 1#12 GRD, 1" SCHEDULE 80 PVC, PRELUBE NO. 2 480V POWER, FROM 01-PDP-01
10. 2#12, 1#12 GRD, 1" SCHEDULE 80 PVC, 01-PVP-01 120V POWER, FROM 01-PDP-01
    2#14, 1#14 GRD, 1" SCHEDULE 80 PVC, ESD SHUTDOWN, 01-PDP-01 TO 01-PVP-01
    1-COMM CABLE TBD, 1" GRS, 01-PVP-01 TO 01-LCP-03
11. 2#4, 1#4 GRD, 01-PVP-02 120V POWER, FROM 01-PDP-01
    2#4, 1#4 GRD, 01-FD-03 120V POWER, FROM 01-PDP-01 } 2" SCHEDULE 80 PVC
    2#6, 1#6 GRD, 01-FMS-02 120V POWER, FROM 01-PDP-01
    4#14, 1#14 GRD, ESD-106 & ESD-107 SIGNALS, TO 01-PDP-01
    2#14, 1#14 GRD, ESD SHUTDOWN, 01-PDP-01 TO 01-PVP-02 } 1" SCH 80 PVC
    1-COMM CABLE TBD, 1" GRS, 01-LCP-03 TO 01-PVP-03
    FUTURE USE, PULL LINES ONLY, 2-1" GRS, TO 01-LCP-03
12. 2#2, 1#6 GRD, 2" SCHEDULE 80 PVC, TRUCK HEATER 480V POWER, FROM 01-MSP-01
    2#4, 1#4 GRD, 01-PVP-03 120V POWER, FROM 01-PDP-01
    2#10, 1#10 GRD, 01-FMS-03 120V POWER, FROM 01-PDP-01 } 2" SCHEDULE 80 PVC
    6#14, 1#14 GRD, ESD-105A, -105B, -105C SIGNALS, TO 01-PDP-01
    2#14, 1#14 GRD, ESD SHUTDOWN, 01-PDP-01 TO 01-PVP-03 } 1" SCH 80 PVC
    1-COMM CABLE TBD, FROM 01-LCP-03 TO RACK
    1-COMM CABLE TBD, FROM 01-PVP-01 TO RACK } 1" GRS
13. 2#12, 1#12 GRD, 01-FD-01 120V POWER, FROM 01-PDP-01
    2#12, 1#12 GRD, 01-FD-02 120V POWER, FROM 01-PDP-01
    2#12, 1#12 GRD, 01-FMS-01 120V POWER, FROM 01-PDP-01 } 1" SCHEDULE 80 PVC
    4#14, 1#14 GRD, 1" SCHEDULE 80 PVC, ESD SIGNALS, TO 01-PDP-01
    1-COMM CABLE TBD, 1" GRS, 01-FMS-01 TO 01-LCP-03
14. 2#14, 1#14 GRD, 3/4" GRS, ESD-104 SIGNAL, TO 01-PDP-01
15. 2#12, 1#12 GRD, 3/4" GRS, 01-FD-01 120V POWER, FROM 01-PDP-01
    1-COMM CABLE TBD, 3/4" GRS, 01-FD-01 TO 01-FMS-01
16. 2#12, 1#12 GRD, 3/4" GRS, 01-FD-02 120V POWER, FROM 01-PDP-01
    1-COMM CABLE TBD, 3/4" GRS, 01-FD-02 TO 01-FMS-01
17. 2#12, 1#12 GRD, 3/4" GRS, 01-FMS-01 120V POWER, FROM 01-PDP-01
    1-COMM CABLE TBD, 3/4" GRS, 01-FMS-01 TO 01-LCP-03
18. 2#14, 1#14 GRD, 1" SCHEDULE 80 PVC, ESD-103 SIGNAL, TO 01-PDP-01
19. 2#14, 1#14 GRD, 1" SCHEDULE 80 PVC, ESD SIGNAL, TO 01-PDP-01

NO	REVISIONS	DRN	CHK	DATE
A	ISSUED FOR BID	DMK	BKL	05/31/11

DRN	DMK	MAY 2011
DES	DMK	MAY 2011
CHK	EDM	MAY 2011
APP	BKL	MAY 2011

AECOM
4135 TECHNOLOGY PARKWAY
SHEBOYGAN, WI 53083-1883
T 920.458.8711 F 920.458.0537
WWW.AECOM.COM

COMPRESSED NATURAL GAS FUELING SYSTEMS
LINCOLN GARAGE SITE
MILWAUKEE, WISCONSIN

ELECTRICAL
CNG STATION AND DPW FAST-FILL AREA

DATE MAY 2011
PROJECT NO 60198094
FILENAME 01-E-02.dwg
FILE NO
SHEET NO 21
DRAWING NO **01-E-02**

Xrefs: E22234bd.dwg
L:\work\60198094\000_CADD\01-Lincoln Garage\SURVEY\kapu\Boundary-Topo.dwg
L:\work\60198094\000_CADD\01-Lincoln Garage\2165-402.tif
L:\work\60198094\000_CADD\01-Lincoln Garage\RECOVERED PROJECTS\994 - Transfer Station - HNTB\CIVIL\DRAWINGS\88-5-C17.dwg
L:\work\60198094\000_CADD\01-Lincoln Garage\C-FAC-01-N.dwg
L:\work\60198094\000_CADD\01-Lincoln Garage\CIVIL\29193.dwg
L:\work\60198094\000_CADD\01-Lincoln Garage\01-M-02.dwg
Images: L:\work\60198094\000_CADD\01-Lincoln Garage\2165-402.tif
L:\work\60198094\000_CADD\01-Lincoln Garage\88-5-C17.tif
L:\work\60198094\000_CADD\01-Lincoln Garage\TOURNE\352TM1nicolAve_Milwaukee.jpg
Plotted By: hansmannb
Plot File Date Created: May/28/2011 10:47 AM
Layout-Sheet Name: LAYOUT
Filename: L:\WORK\60198094\000_CADD\01-LINCOLN GARAGE\01-E-02.DWG

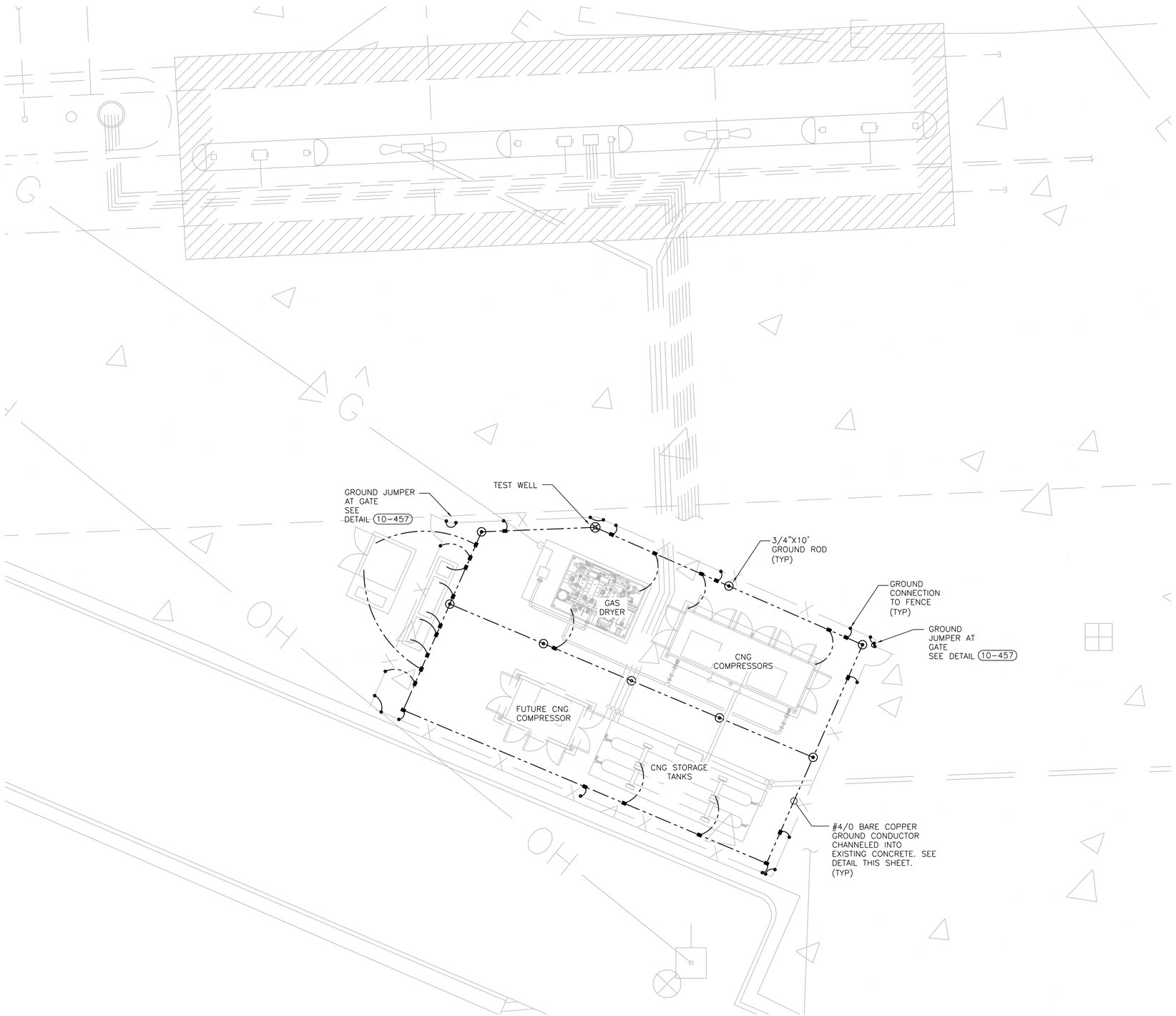

CNG STATION AND DPW FAST-FILL AREA GROUNDING

0' 4' 8' 16'
SCALE

GENERAL NOTES

1. DO NOT PENETRATE BELOW GRADE LANDFILL MAT.
2. FOR CONDUCTOR TO GROUND ROD CONNECTIONS, SEE DETAIL (10-451).
3. FOR EQUIPMENT GROUND CABLE STUB-UPS, SEE DETAIL (10-452).
4. FOR LINE POST GROUNDING, SEE DETAIL (10-458).
5. FOR STEEL OR METAL STRUCTURE GROUND CONNECTION, SEE DETAIL (10-453).
6. SEE DIESEL FUELING STATION RECORD DRAWINGS FOR LOCATIONS OF UNDERGROUND UTILITIES AND STRUCTURES.
7. CORE DRILL THRU 9" CONCRETE FOR INSTALLATION OF GROUND RODS. PATCH TO PREVIOUS GRADE.
8. FOR TEST WELL, SEE DETAIL (10-455).

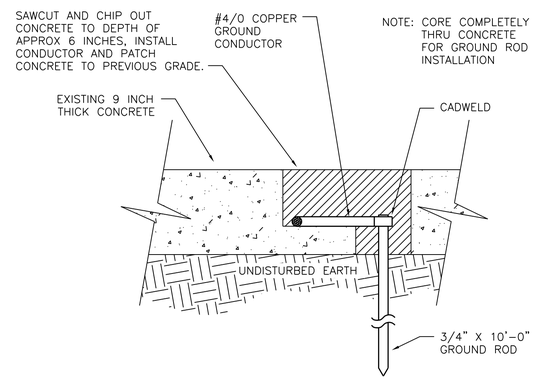

CONCRETE CHANNEL DETAIL FOR GROUNDING

NTS

NO	REVISIONS	DRN	CHK	DATE
A	ISSUED FOR BID	DMK	BKL	05/31/11

DRN	DMK	MAY 2011
DES	DMK	MAY 2011
CHK	EDM	MAY 2011
APP	BKL	MAY 2011

AECOM
4135 TECHNOLOGY PARKWAY
SHEBOYGAN, WI 53083-1883
T 920.458.8711 F 920.458.0537
WWW.AECOM.COM

COMPRESSED NATURAL GAS FUELING SYSTEMS
LINCOLN GARAGE SITE
MILWAUKEE, WISCONSIN

ELECTRICAL
CNG STATION AND DPW FAST-FILL AREA GROUNDING

DATE	MAY 2011
PROJECT NO	60198094
FILENAME	01-E-03.dwg
FILE NO	
SHEET NO	22
DRAWING NO	01-E-03

Plotted By: hansmannb
Plot File Date Created: May/28/2011 10:49 AM
Layout-Sheet Name: LAYOUT
Filename: L:\WORK\60198094\000_CADD\01-LINCOLN GARAGE\01-E-03.DWG
Xrefs: E122340d.dwg
L:\work\60198094\000_CADD\01-Lincoln Garage\SURVEY\kapu\Boundary-Topo.dwg
L:\work\60198094\000_CADD\01-Lincoln Garage\RECOVERED PROJECTS\1994 - Transfer Station - HNTB\CIVIL\DRAWINGS\1994-01-Lincoln Garage\C-FAC-01-N.dwg
L:\work\60198094\000_CADD\01-Lincoln Garage\CIVIL\29193.dwg
L:\work\60198094\000_CADD\01-Lincoln Garage\01-M-02.dwg
Images: L:\work\60198094\000_CADD\01-Lincoln Garage\2165-402.tif
L:\work\60198094\000_CADD\01-Lincoln Garage\2165-404.tif
L:\work\60198094\000_CADD\01-Lincoln Garage\BBL-5-C17.tif
L:\work\60198094\000_CADD\01-Lincoln Garage\FIGURES\3921Wincolnlake_Milwaukee.jpg

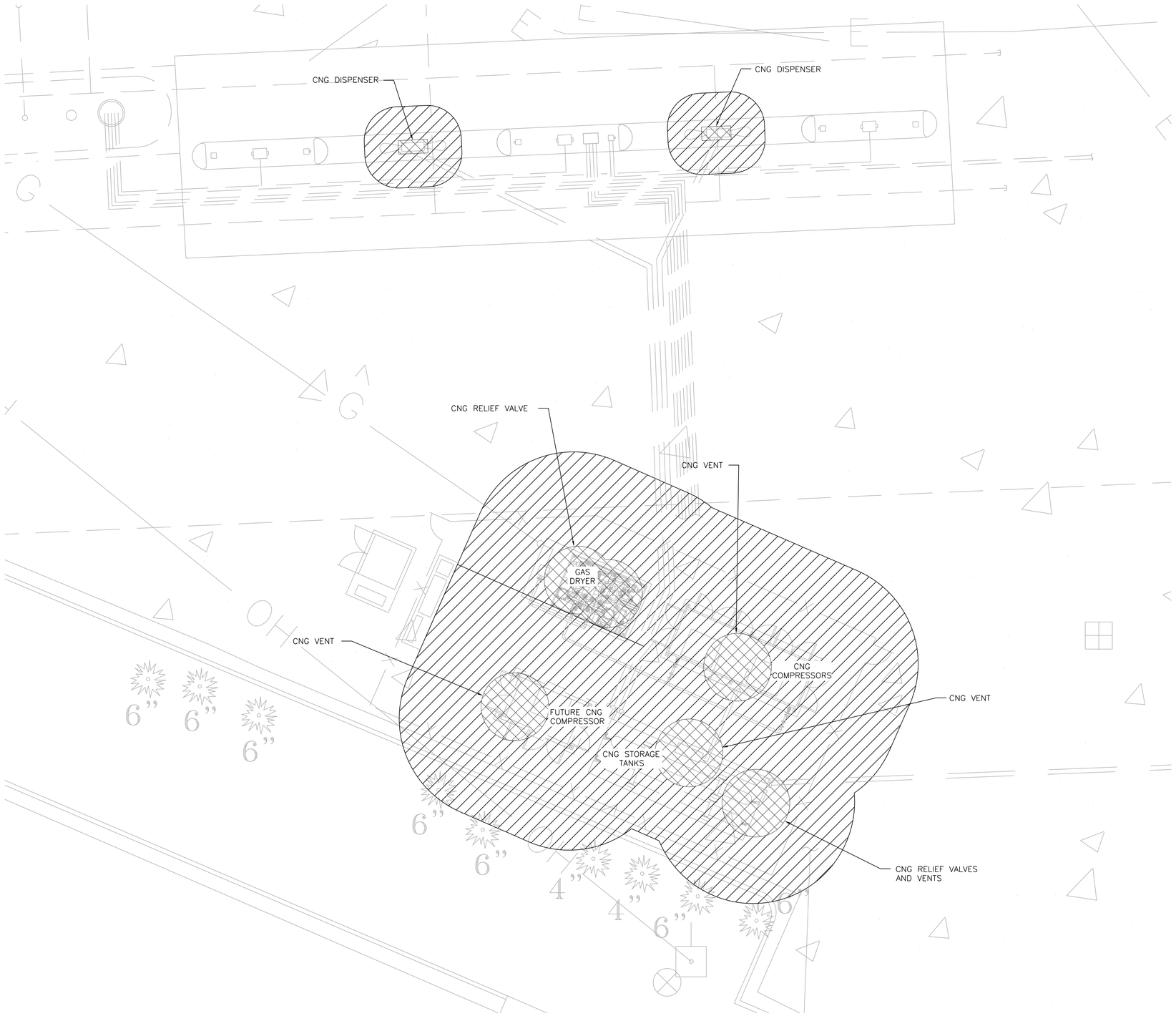

GENERAL NOTES

1. DO NOT PENETRATE BELOW GRADE LANDFILL MAT.
2. FOR DETAILS OF HAZARDOUS CLASSIFICATIONS SURROUNDING CNG DISPENSERS, SEE DETAIL (10-002).
3. FOR DETAILS OF HAZARDOUS CLASSIFICATIONS SURROUNDING CNG STORAGE TANKS, SEE DETAIL (10-003).
4. FOR DETAILS OF HAZARDOUS CLASSIFICATIONS SURROUNDING CNG RELIEF VALVES, SEE DETAIL (10-004).
5. FOR DETAILS OF HAZARDOUS CLASSIFICATIONS SURROUNDING CNG VENTS, SEE DETAIL (10-006).
6. FOR DETAILS OF HAZARDOUS CLASSIFICATIONS SURROUNDING CNG COMPRESSORS AND GAS DRYERS, SEE DETAIL (10-005).

LEGEND

CLASS I, DIVISION 2, GROUP D

CLASS I, DIVISION 1, GROUP D

UNCLASSIFIED

CNG STATION AND DPW FAST-FILL AREA HAZARD LOCATIONS

0' 4' 8' 16'
SCALE

NO	REVISIONS	DRN	CHK	DATE
A	ISSUED FOR BID	DMK	BKL	05/31/11

DRN	DMK	MAY 2011
DES	DMK	MAY 2011
CHK	EDM	MAY 2011
APP	BKL	MAY 2011

AECOM
4135 TECHNOLOGY PARKWAY
SHEBOYGAN, WI 53083-1883
T 920.458.8711 F 920.458.0537
WWW.AECOM.COM

COMPRESSED NATURAL GAS FUELING SYSTEMS
LINCOLN GARAGE SITE
MILWAUKEE, WISCONSIN

ELECTRICAL
CNG STATION AND DPW FAST-FILL AREA HAZARDOUS LOCATIONS

DATE MAY 2011
PROJECT NO 60198094
FILENAME 01-E-04.dwg
FILE NO
SHEET NO 23
DRAWING NO
01-E-04

Xrefs: E122340.dwg
L:\work\60198094\000_CADD\01-Lincoln Garage\SURVEY\Kapur\Boundary-Topo.dwg
L:\work\60198094\000_CADD\01-Lincoln Garage\RECOVERED PROJECTS\1994 - Transfer Station - HNTB\CIVIL\DRAWINGS\C-FAC-01-N.dwg
L:\work\60198094\000_CADD\01-Lincoln Garage\CIVIL\29193.dwg
L:\work\60198094\000_CADD\01-Lincoln Garage\01-M-02.dwg
Images: L:\work\60198094\000_CADD\01-Lincoln Garage\2165-402.tif
L:\work\60198094\000_CADD\01-Lincoln Garage\2165-404.tif
L:\work\60198094\000_CADD\01-Lincoln Garage\BB-5-C17.tif
L:\work\60198094\000_CADD\01-Lincoln Garage\HOUSE\352118ulincolnAve_Milwaukee.jpg
Plotted By: hansmannb
Plot File Date Created: May/28/2011 10:50 AM
Layout-Sheet Name: LAYOUT
Filename: L:\WORK\60198094\000_CADD\01-LINCOLN GARAGE\01-E-04.DWG

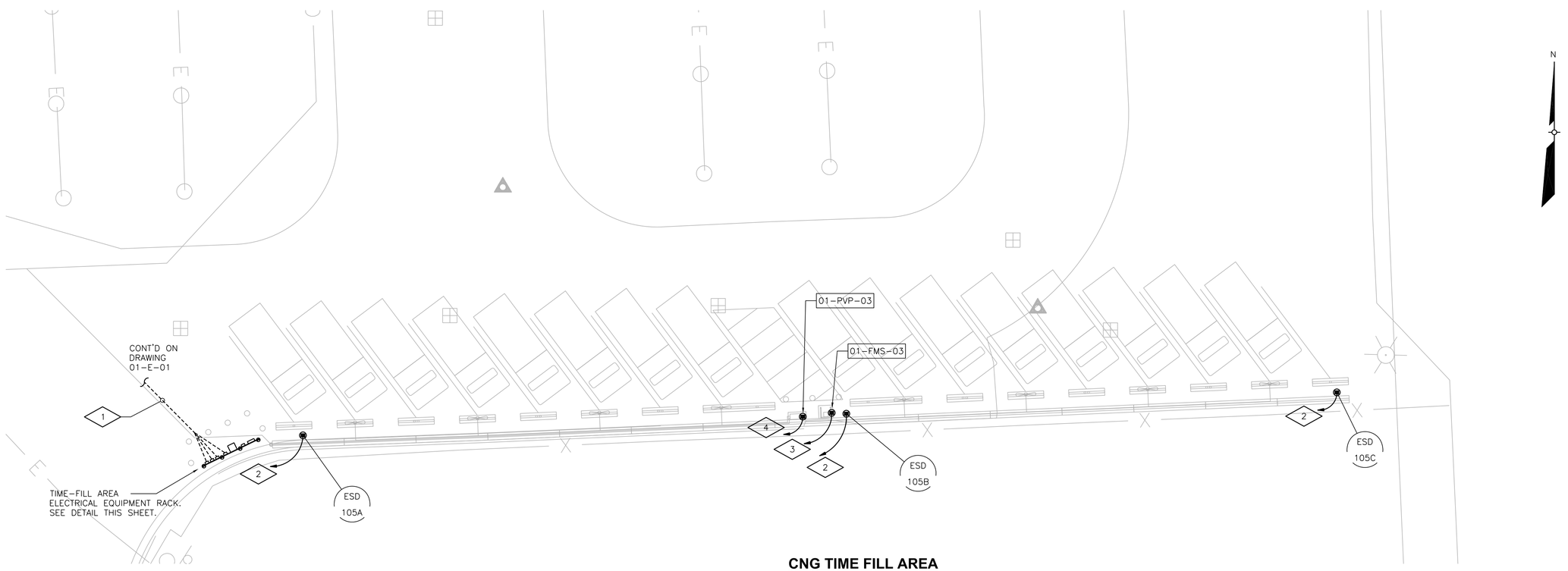

CNG TIME FILL AREA

0' 8' 16' 32'
SCALE

GENERAL NOTES

1. FOR ELECTRICAL OVERALL SITE PLAN, SEE DRAWING 01-E-01.
2. FOR ONE-LINE DIAGRAM, SEE DRAWING 01-E-10.
3. FOR HAZARDOUS CLASSIFICATIONS, SEE DRAWING 01-E-06.
4. FOR GAS PIPING/ELECTRICAL CONDUIT, SEE DETAIL (10-450).

PLAN NOTES

1. 2#2, 1#6 GRD, 2" SCHEDULE 80 PVC, TRUCK HEATER 480V POWER, FROM 01-MSP-01
   - 2#4, 1#4 GRD, 01-PVP-03 120V POWER, FROM 01-PDP-01
   - 2#10, 1#10 GRD, 01-FMS-03 120V POWER, FROM 01-PDP-01
   - } 2" SCHEDULE 80 PVC
   - 6#14, 1#14 GRD, ESD SIGNALS, TO 01-PDP-01
   - 2#14, 1#14 GRD, ESD SHUTDOWN, 01-PDP-01 TO 01-PVP-03
   - } 1" SCHEDULE 80 PVC
   - 1-COMM CABLE TBD, FROM 01-LCP-03 TO RACK
   - 1-COMM CABLE TBD, FROM 01-PVP-01 TO RACK
   - } 1" GRS
2. 2#14, 1#14 GRD, 3/4" GRS FOR ESD-105A, -105B, -105C SIGNAL, TO RACK
3. 2#10, 1#10 GRD, 3/4" GRS, 01-FMS-03 120V POWER, FROM 01-PDP-01
   - 1-COMM CABLE TBD, 3/4" GRS, 01-FMS-03 TO 01-PVP-03
4. 2#4, 1#4 GRD, 1" GRS, 01-PVP-03 120V POWER, FROM 01-PDP-01
   - 2#14, 1#14 GRD, 3/4" GRS, ESD SHUTDOWN, TO 01-PVP-03
   - 1-COMM CABLE TBD, FROM RACK TO 01-PVP-03
   - 1-COMM CABLE TBD, FROM RACK TO 01-PVP-01
   - } 1" GRS

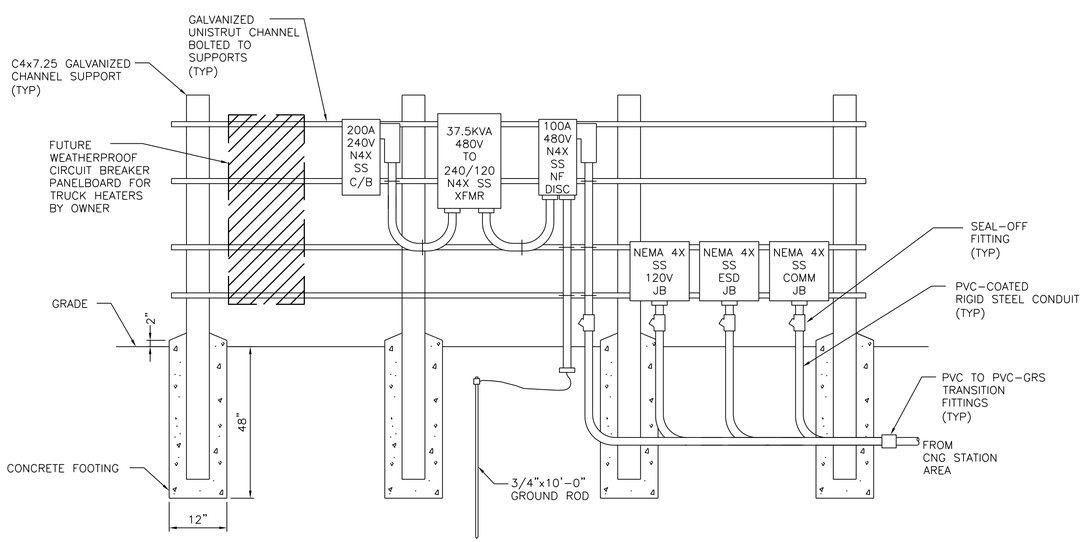

TIME-FILL AREA
ELECTRICAL EQUIPMENT RACK DETAIL

NTS

NO	REVISIONS	DRN	CHK	DATE
A	ISSUED FOR BID	DMK	BKL	05/31/11

DRN	DMK	MAY 2011
DES	DMK	MAY 2011
CHK	EDM	MAY 2011
APP	BKL	MAY 2011

AECOM
4135 TECHNOLOGY PARKWAY
SHEBOYGAN, WI 53083-1883
T 920.458.8711 F 920.458.0537
WWW.AECOM.COM

COMPRESSED NATURAL GAS FUELING SYSTEMS
LINCOLN GARAGE SITE
MILWAUKEE, WISCONSIN

ELECTRICAL
CNG TIME FILL AREA

DATE	MAY 2011
PROJECT NO	60198094
FILENAME	01-E-05.dwg
FILE NO	
SHEET NO	24
DRAWING NO	01-E-05

Xrefs: E12234bd.dwg
L:\work\60198094\000_CADD\01-Lincoln Garage\SURVEY\kapu\Boundary-Topo.dwg
L:\work\60198094\000_CADD\01-Lincoln Garage\RECOVERED PROJECTS\1994 - Transfer Station - HWTB\CIVIL\2165-402.tif
L:\work\60198094\000_CADD\01-Lincoln Garage\2165-404.tif
L:\work\60198094\000_CADD\01-Lincoln Garage\LBB-5-C17.tif
L:\work\60198094\000_CADD\01-Lincoln Garage\C-FAC-01-N.dwg
L:\work\60198094\000_CADD\01-Lincoln Garage\CIVIL\29193.dwg
Images: L:\work\60198094\000_CADD\01-Lincoln Garage\1BB-5-C17.tif
L:\work\60198094\000_CADD\01-Lincoln Garage\LBB-5-C17.tif
L:\work\60198094\000_CADD\01-Lincoln Garage\FIGURES\321WLincolnAve_Milwaukee.jpg
Plotted By: hansmannb
Plot File Date Created: May/28/2011 3:59 PM
Layout-Sheet Name: LAYOUT
Filename: L:\WORK\60198094\000_CADD\01-LINCOLN GARAGE\01-E-05.DWG

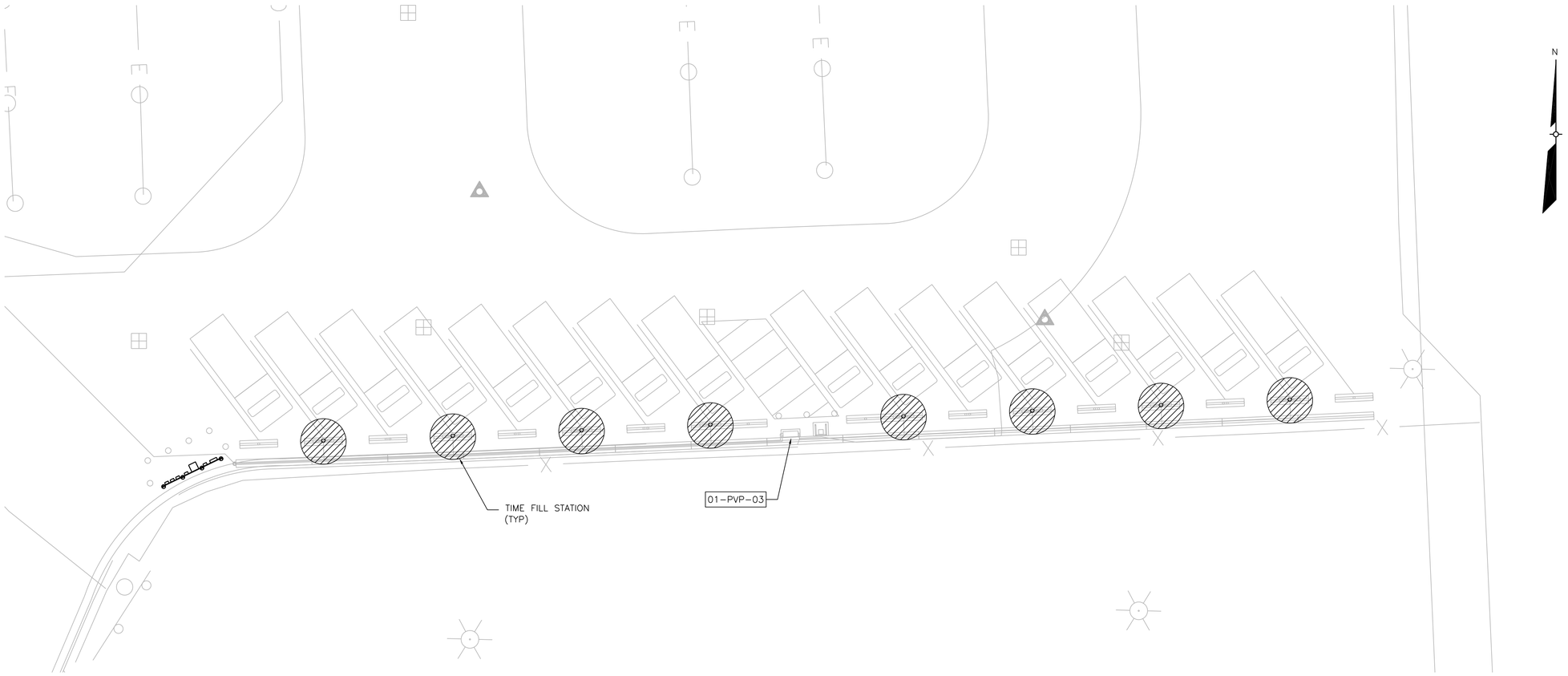

CNG TIME FILL AREA HAZARDOUS LOCATIONS

0' 8' 16' 32'
SCALE

LEGEND

- CLASS I, DIVISION 2, GROUP D
- CLASS I, DIVISION 1, GROUP D
- UNCLASSIFIED

GENERAL NOTES

1. FOR DETAILS OF HAZARDOUS CLASSIFICATIONS SURROUNDING CNG RELIEF VALVES, SEE DETAIL (10-004).
2. FOR DETAILS OF HAZARDOUS CLASSIFICATIONS SURROUNDING CNG VENTS, SEE DETAIL (10-006).
3. FOR DETAILS OF HAZARDOUS CLASSIFICATIONS SURROUNDING CNG TIME FILL STATIONS, SEE DETAIL (10-001).

NO	REVISIONS	DRN	CHK	DATE
A	ISSUED FOR BID	DMK	BKL	05/31/11

DRN	DMK	MAY 2011
DES	DMK	MAY 2011
CHK	EDM	MAY 2011
APP	BKL	MAY 2011

AECOM
4135 TECHNOLOGY PARKWAY
SHEBOYGAN, WI 53083-1883
T 920.458.8711 F 920.458.0537
WWW.AECOM.COM

COMPRESSED NATURAL GAS FUELING SYSTEMS
LINCOLN GARAGE SITE
MILWAUKEE, WISCONSIN

ELECTRICAL
CNG TIME FILL AREA
HAZARDOUS LOCATIONS

DATE MAY 2011
PROJECT NO 60198094
FILENAME 01-E-06.dwg
FILE NO
SHEET NO 25
DRAWING NO **01-E-06**

Xrefs: E12234bd.dwg
L:\work\60198094\000_CADD\01-Lincoln Garage\SURVEY\kapu\Boundary-Topo.dwg
L:\work\60198094\000_CADD\01-Lincoln Garage\RECOVERED PROJECTS\1994 - Transfer Station - HNTB\CIVIL\24x36\60198094\000_CADD\01-Lincoln Garage\21653-402.tif
L:\work\60198094\000_CADD\01-Lincoln Garage\C-FAC-01-N.dwg
L:\work\60198094\000_CADD\01-Lincoln Garage\CIVIL\29193.dwg
01-E-05.dwg
Images: L:\work\60198094\000_CADD\01-Lincoln Garage\21653-402.tif
L:\work\60198094\000_CADD\01-Lincoln Garage\21653-404.tif
L:\work\60198094\000_CADD\01-Lincoln Garage\RE-S-C1.tif
L:\work\60198094\000_CADD\01-Lincoln Garage\PROJECTS\2012\MLinconAve_Milwaukee.jpg
Plotted By: hansmannb
Plot File Date Created: May/27/2011 9:45 PM
Layout-Sheet Name: LAYOUT
Filename: L:\WORK\60198094\000_CADD\01-LINCOLN GARAGE\01-E-06.DWG

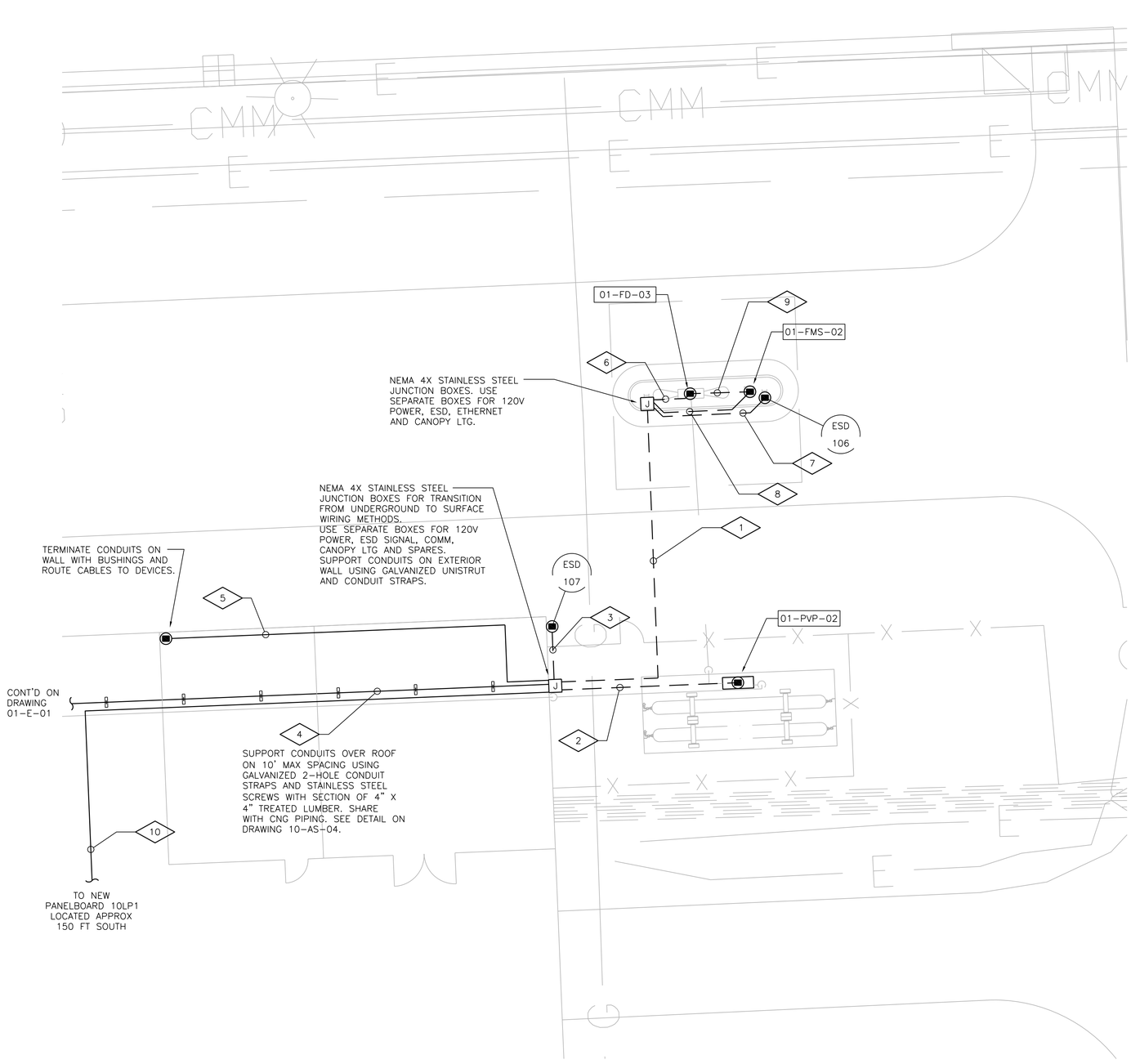

PUBLIC CNG STORAGE AND DISPENSING AREA

0' 4' 8' 16'
SCALE

N

GENERAL NOTES

1. FOR ELECTRICAL OVERALL SITE PLAN, SEE DRAWING 01-E-01.
2. FOR ONE-LINE DIAGRAM, SEE DRAWING 01-E-10.
3. FOR GROUNDING, SEE DRAWING 01-E-08.
4. FOR HAZARDOUS CLASSIFICATIONS, SEE DRAWING 01-E-09.
5. SEE DIESEL FUELING STATION RECORD DRAWINGS FOR LOCATIONS OF UNDERGROUND UTILITIES AND STRUCTURES.
6. FOR GAS PIPING/ELECTRICAL CONDUIT, SEE DETAIL (10-450).

PLAN NOTES

1. 2#4, 1#4 GRD, 01-FD-03 120V POWER, FROM 01-PDP-01
   2#6, 1#6 GRD, 01-FMS-02 120V POWER, FROM 01-PDP-01
   } 2" SHEDULE 80 PVC
   2#14, 1#14 GRD, 1" SCHEDULE 80 PVC, ESD-106 SIGNAL, TO 01-PDP-01
   1-COMM CABLE TBD, 1" GRS, 01-FMS-02 TO COMM ROOM IN BLDG
   4#12, 1#12 GRD, 1" SCHEDULE 80 PVC, 120V POWER FOR CANOPY LTG, FROM NEW PANEL 10LP1
2. 2#4, 1#4 GRD, 1" SCHEDULE 80 PVC, 01-PVP-02 120V POWER, FROM 01-PDP-01
   2#14, 1#14 GRD, 1" SCHEDULE 80 PVC, ESD SHUTDOWN, 01-PDP-01-TO 01-PVP-02
   1-COMM CABLE TBD, 1" GRS, 01-PVP-02 TO COMM ROOM IN BLDG
3. 2#14, 1#14 GRD, 1" SCHEDULE 80 PVC, ESD-107 SIGNAL, TO 01-PDP-01
4. 2#4, 1#4 GRD, 01-PVP-02 120V POWER, FROM 01-PDP-01
   2#4, 1#4 GRD, 01-FD-03 120V POWER, FROM 01-PDP-01
   2#6, 1#6 GRD, 01-FMS-02 120V POWER, FROM 01-PDP-01
   } 2" GRS INSTALLED ABOVE ROOF
   4#14, 1#14 GRD, ESD-106 AND ESD-107 SIGNALS, TO 01-PDP-01
   2#14, 1#14 GRD, ESD SHUTDOWN, 01-PDP-01 TO 01-PVP-02
   } 1" GRS INSTALLED ABOVE ROOF
   1-COMM CABLE TBD, 1"GRS ABOVE ROOF, COMM ROOM IN BLDG TO 01-LCP-03
   FUTURE USE, PULL LINES ONLY, 2-1" GRS INSTALLED ABOVE ROOF, TO 01-LCP-03
5. 1-COMM CABLE TBD, COMM ROOM IN BUILDING TO 01-PVP-02
   1-COMM CABLE TBD, COMM ROOM IN BUILIDNG TO 01-FMS-02
   1-COMM CABLE TBD, COMM ROOM IN BUILDING TO 01-LCP-03
   } 1" GRS INSTALLED AT INTERIOR CEILING
   FUTURE USE, PULL LINES ONLY, 2-1" GRS INSTALLED AT INTERIOR CEILING, TO 01-LCP-03
6. 2#4, 1#4 GRD, 1" GRS, 01-FD-03 120V POWER, FROM 01-PDP-01
7. 2#14, 1#14 GRD, 3/4" GRS, ESD-106 SIGNAL, TO 01-PDP-01
8. 2#6, 1#6 GRD, 3/4" GRS, 01-FMS-02 120V POWER, FROM 01-PDP-01
   1-COMM CABLE TBD, 3/4" GRS, 01-FMS-02 TO COMM ROOM IN BUILDING
9. 1-COMM CABLE TBD, 3/4" GRS, 01-FMS-02 TO 01-FD-03
10. 4#12, 1#12 GRD, 3/4" GRS RUNNING AT INTERIOR CEILING, 120V CANOPY LTG, NEW PANELBOARD 10LP1 TO CANOPY LTG

NO	REVISIONS	DRN	CHK	DATE
A	ISSUED FOR BID	DMK	BKL	05/31/11

DRN	DMK	MAY 2011
DES	DMK	MAY 2011
CHK	EDM	MAY 2011
APP	BKL	MAY 2011

AECOM
4135 TECHNOLOGY PARKWAY
SHEBOYGAN, WI 53083-1883
T 920.458.8711 F 920.458.0537
WWW.AECOM.COM

COMPRESSED NATURAL GAS FUELING SYSTEMS
LINCOLN GARAGE SITE
MILWAUKEE, WISCONSIN

ELECTRICAL
PUBLIC CNG STORAGE AND DISPENSING AREA

DATE	MAY 2011
PROJECT NO	60198094
FILENAME	01-E-07.dwg
FILE NO	
SHEET NO	26
DRAWING NO	01-E-07

Xrefs: E12234bd.dwg
L:\work\60198094\000_CADD\01-Lincoln Garage\SURVEY\Kapur\Boundary-Topo.dwg
L:\work\60198094\000_CADD\01-Lincoln Garage\RECOVERED PROJECTS\1994 - Transfer Station - HWTB\CIVIL\2165-402.tif
L:\work\60198094\000_CADD\01-Lincoln Garage\2165-404.tif
L:\work\60198094\000_CADD\01-Lincoln Garage\BB-5-C11.tif
L:\work\60198094\000_CADD\01-Lincoln Garage\C-FAC-01-N.dwg
L:\work\60198094\000_CADD\01-Lincoln Garage\CIVIL\29193.dwg
Images: L:\work\60198094\000_CADD\01-Lincoln Garage\2165-402.tif
L:\work\60198094\000_CADD\01-Lincoln Garage\2165-404.tif
L:\work\60198094\000_CADD\01-Lincoln Garage\BB-5-C11.tif
L:\work\60198094\000_CADD\01-Lincoln Garage\FIGURES\392\Wincofuke_Milwaukee.jpg
Plotted By: hansmannb
Plot File Date Created: May/28/2011 4:00 PM
Layout-Sheet Name: LAYOUT
Filename: L:\WORK\60198094\000_CADD\01-LINCOLN GARAGE\01-E-07.DWG

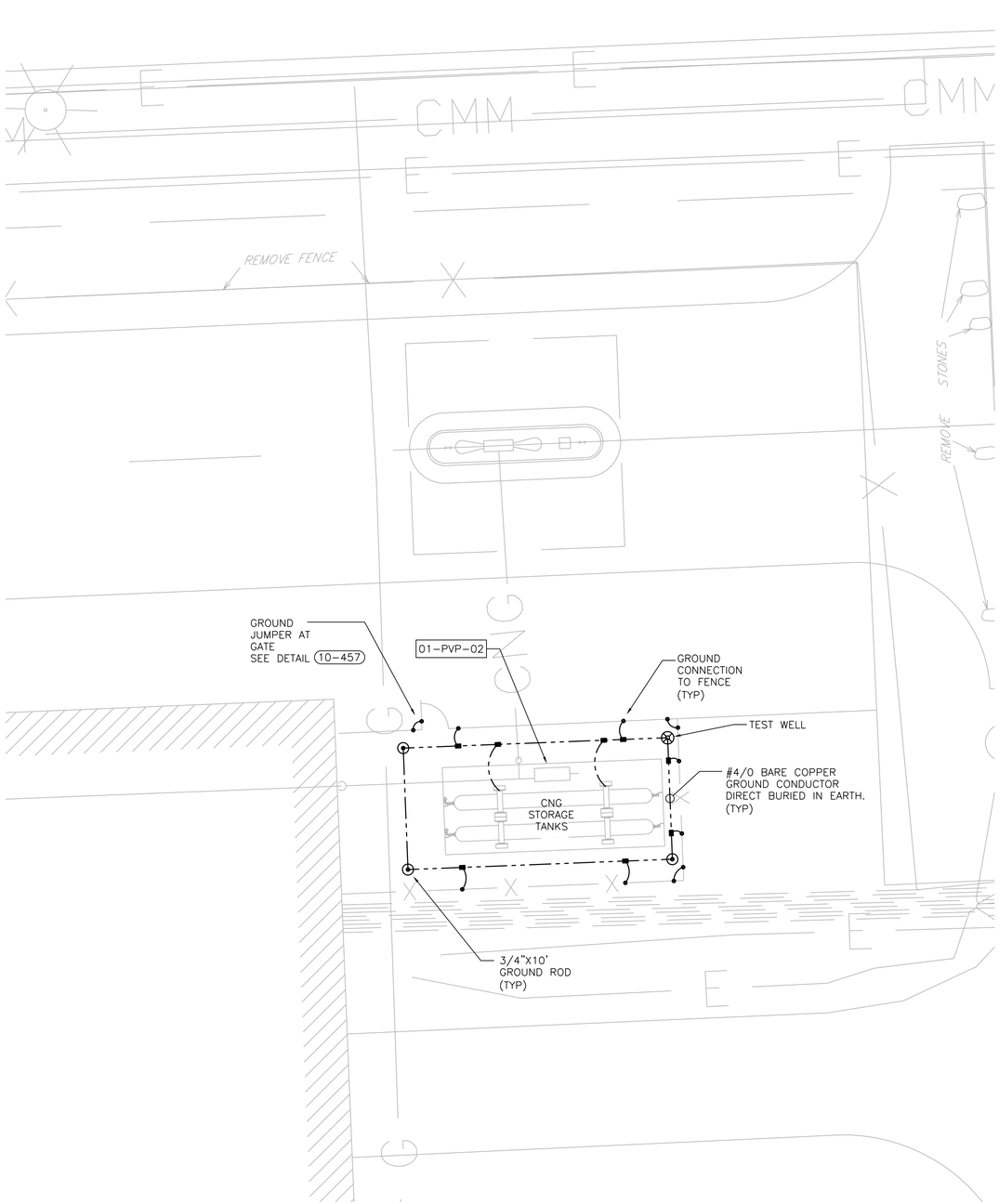

PUBLIC CNG STORAGE AND DISPENSING AREA GROUNDING

0' 4' 8' 16'
SCALE

GENERAL NOTES

1. FOR CONDUCTOR TO GROUND ROD CONNECTIONS, SEE DETAIL 10-451.
2. FOR EQUIPMENT GROUND CABLE STUB-UPS, SEE DETAIL 10-452.
3. FOR LINE POST GROUNDING, SEE DETAIL 10-458.
4. FOR STEEL OR METAL STRUCTURE GROUND CONNECTION, SEE DETAIL 10-453.
5. FOR TEST WELL, SEE DETAIL 10-455.

NO	REVISIONS	DRN	CHK	DATE
A	ISSUED FOR BID	DMK	BKL	05/31/11

DRN	DMK	MAY 2011
DES	DMK	MAY 2011
CHK	EDM	MAY 2011
APP	BKL	MAY 2011

AECOM
4135 TECHNOLOGY PARKWAY
SHEBOYGAN, WI 53083-1883
T 920.458.8711 F 920.458.0537
WWW.AECOM.COM

COMPRESSED NATURAL GAS FUELING SYSTEMS
LINCOLN GARAGE SITE
MILWAUKEE, WISCONSIN

ELECTRICAL
PUBLIC CNG STORAGE
AND DISPENSING AREA GROUNDING

DATE	MAY 2011
PROJECT NO	60198094
FILENAME	01-E-08.dwg
FILE NO	
SHEET NO	27
DRAWING NO	01-E-08

Xrefs: E12234bd.dwg
L:\work\60198094\000_CADD\01-Lincoln Garage\SURVEY\Kapur\Boundary-Topo.dwg
L:\work\60198094\000_CADD\01-Lincoln Garage\RECOVERED PROJECTS\1994 - Transfer Station - HNTB\CIVIL\DEWAY\60198094\000_CADD\01-Lincoln Garage\2165-404.tif
L:\work\60198094\000_CADD\01-Lincoln Garage\RECOVERED PROJECTS\1994 - Transfer Station - HNTB\CIVIL\DEWAY\60198094\000_CADD\01-Lincoln Garage\88-5-C.tif
L:\work\60198094\000_CADD\01-Lincoln Garage\C-FAC-01-N.dwg
L:\work\60198094\000_CADD\01-Lincoln Garage\CIVIL\29193.dwg

Images: L:\work\60198094\000_CADD\01-Lincoln Garage\2165-402.tiff
L:\work\60198094\000_CADD\01-Lincoln Garage\2165-404.tif
L:\work\60198094\000_CADD\01-Lincoln Garage\88-5-C.tif
L:\work\60198094\000_CADD\01-Lincoln Garage\FIGURES\3921WLincolnAve_Milwaukee.jpg

Plotted By: hansmannb
Plot File Date Created: May/28/2011 10:55 AM
Layout-Sheet Name: LAYOUT
Filename: L:\WORK\60198094\000_CADD\01-LINCOLN GARAGE\01-E-08.DWG

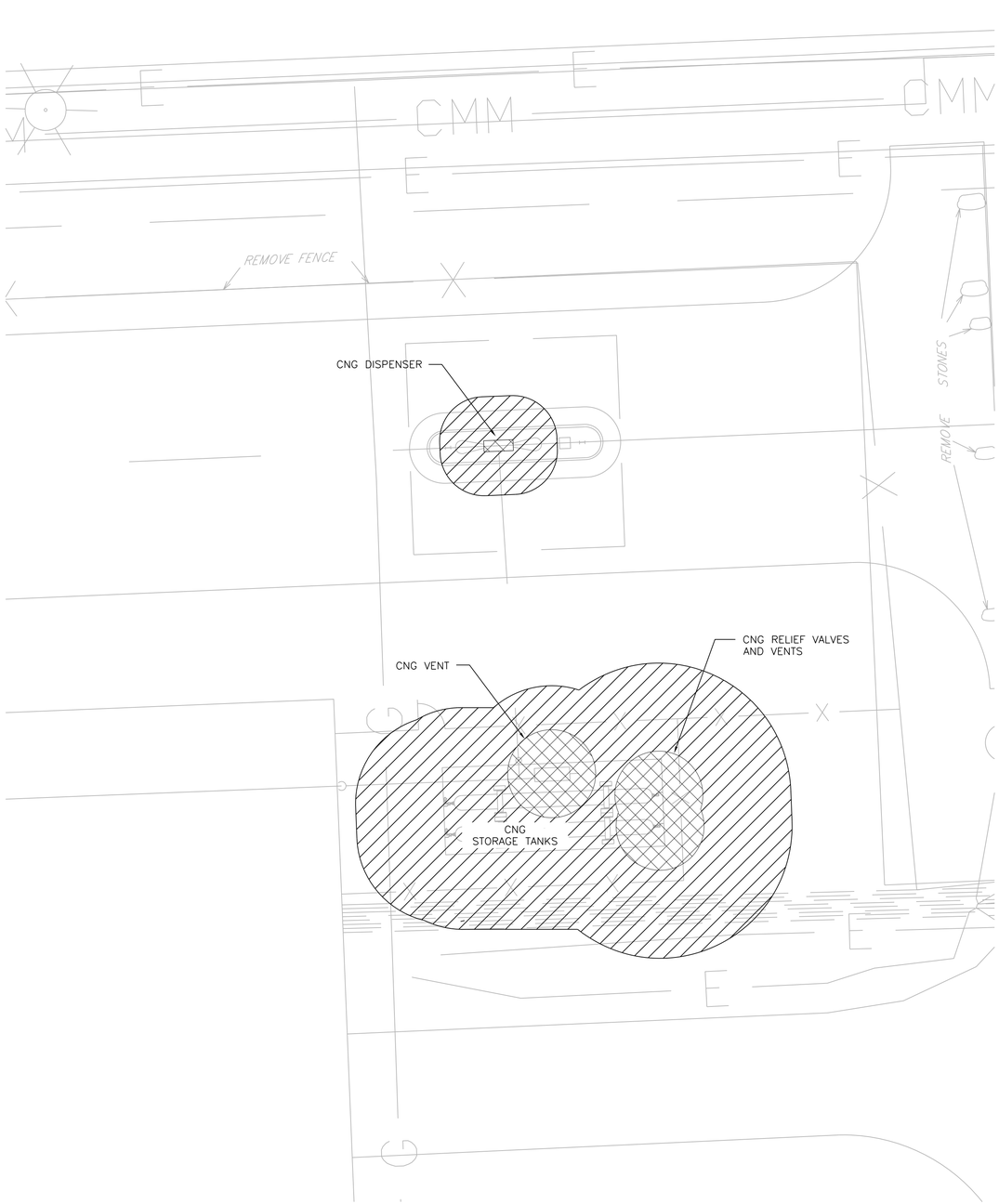

PUBLIC CNG STORAGE AND DISPENSING AREA HAZARDOUS LOCATIONS

0' 4' 8' 16'
SCALE

GENERAL NOTES

1. FOR DETAILS OF HAZARDOUS CLASSIFICATIONS SURROUNDING CNG DISPENSERS, SEE DETAIL (10-002).
2. FOR DETAILS OF HAZARDOUS CLASSIFICATIONS SURROUNDING CNG STORAGE TANKS, SEE DETAIL (10-003).
3. FOR DETAILS OF HAZARDOUS CLASSIFICATIONS SURROUNDING CNG RELIEF VALVES, SEE DETAIL (10-004).
4. FOR DETAILS OF HAZARDOUS CLASSIFICATIONS SURROUNDING CNG VENTS, SEE DETAIL (10-006).

LEGEND

- CLASS I, DIVISION 2, GROUP D
- CLASS I, DIVISION 1, GROUP D
- UNCLASSIFIED

NO	REVISIONS	DRN	CHK	DATE
A	ISSUED FOR BID	DMK	BKL	05/31/11

DRN	DMK	MAY 2011
DES	DMK	MAY 2011
CHK	EDM	MAY 2011
APP	BKL	MAY 2011

AECOM
4135 TECHNOLOGY PARKWAY
SHEBOYGAN, WI 53083-1883
T 920.458.8711 F 920.458.0537
WWW.AECOM.COM

COMPRESSED NATURAL GAS FUELING SYSTEMS
LINCOLN GARAGE SITE
MILWAUKEE, WISCONSIN

ELECTRICAL PUBLIC CNG STORAGE AND DISPENSING AREA HAZARDOUS LOCATIONS

DATE	MAY 2011
PROJECT NO	60198094
FILENAME	01-E-09.dwg
FILE NO	
SHEET NO	28
DRAWING NO	01-E-09

Xrefs: E12234bd.dwg
L:\work\60198094\000_CADD\01-Lincoln Garage\SURVEY\Kapur\Boundary-Topo.dwg
L:\work\60198094\000_CADD\01-Lincoln Garage\2165-402.tif
L:\work\60198094\000_CADD\01-Lincoln Garage\RECOVERED PROJECTS\1994 - Transfer Station - HNTB\CIVIL\GRADE\01-Lincoln Garage\2165-404.tif
L:\work\60198094\000_CADD\01-Lincoln Garage\RECOVERED PROJECTS\1994 - Transfer Station - HNTB\CIVIL\GRADE\01-Lincoln Garage\88-5-C.tif
L:\work\60198094\000_CADD\01-Lincoln Garage\C-FAC-01-N.dwg
L:\work\60198094\000_CADD\01-Lincoln Garage\CIVIL\29193.dwg
Images: L:\work\60198094\000_CADD\01-Lincoln Garage\2165-402.tif
L:\work\60198094\000_CADD\01-Lincoln Garage\2165-404.tif
L:\work\60198094\000_CADD\01-Lincoln Garage\88-5-C.tif
L:\work\60198094\000_CADD\01-Lincoln Garage\FIGURES\3921WLincolnAve_Milwaukee.jpg
Plotted By: hansmannb
Plot File Date Created: May/28/2011 10:56 AM
Layout-Sheet Name: LAYOUT
Filename: L:\WORK\60198094\000_CADD\01-LINCOLN GARAGE\01-E-09.DWG

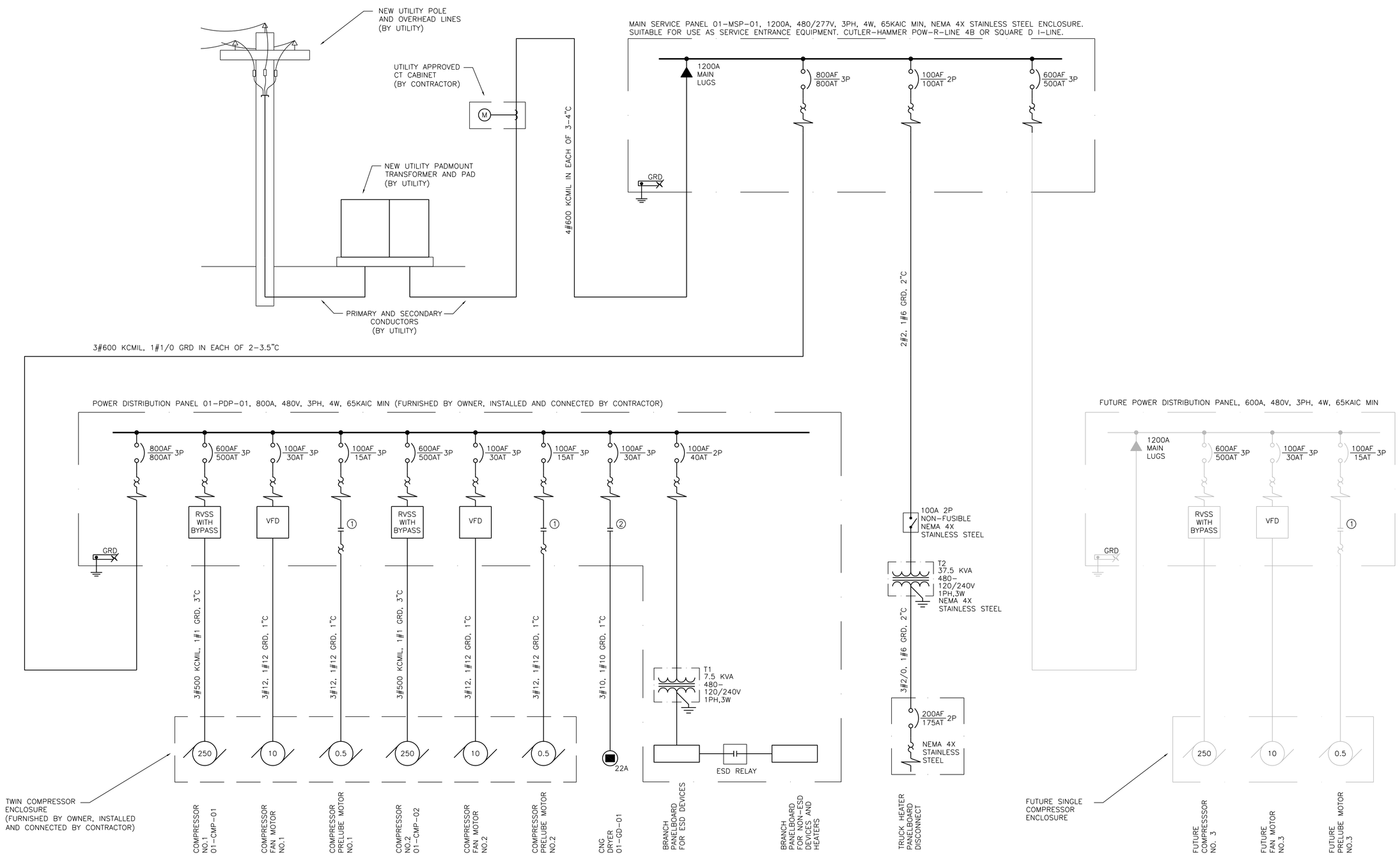

LINCOLN AVENUE SITE ONE-LINE DIAGRAM

NTS

NO	REVISIONS	DATE	DRN	CHK
A	ISSUED FOR BID	05/31/11	DMK	BKL

DRN	DMK	MAY 2011
DES	DMK	MAY 2011
CHK	EDM	MAY 2011
APP	BKL	MAY 2011

AECOM
4135 TECHNOLOGY PARKWAY
SHEBOYGAN, WI 53083-1883
T 920.458.8711 F 920.458.0537
WWW.AECOM.COM

COMPRESSED NATURAL GAS FUELING SYSTEMS
LINCOLN GARAGE SITE
MILWAUKEE, WISCONSIN

ELECTRICAL ONE-LINE DIAGRAM

DATE	MAY 2011
PROJECT NO	60198094
FILENAME	01-E-10.dwg
FILE NO	
SHEET NO	29
DRAWING NO	01-E-10

Xrefs: L:\work\60198094\000_CADD\01-Lincoln Garage\E12234bd.dwg
Images:
Plotted By: hansmannb
Plot File Date Created: May/28/2011 4:01 PM
Layout-Sheet Name: LAYOUT1
Filename: L:\WORK\60198094\000_CADD\01-LINCOLN GARAGE\01-E-10.DWG

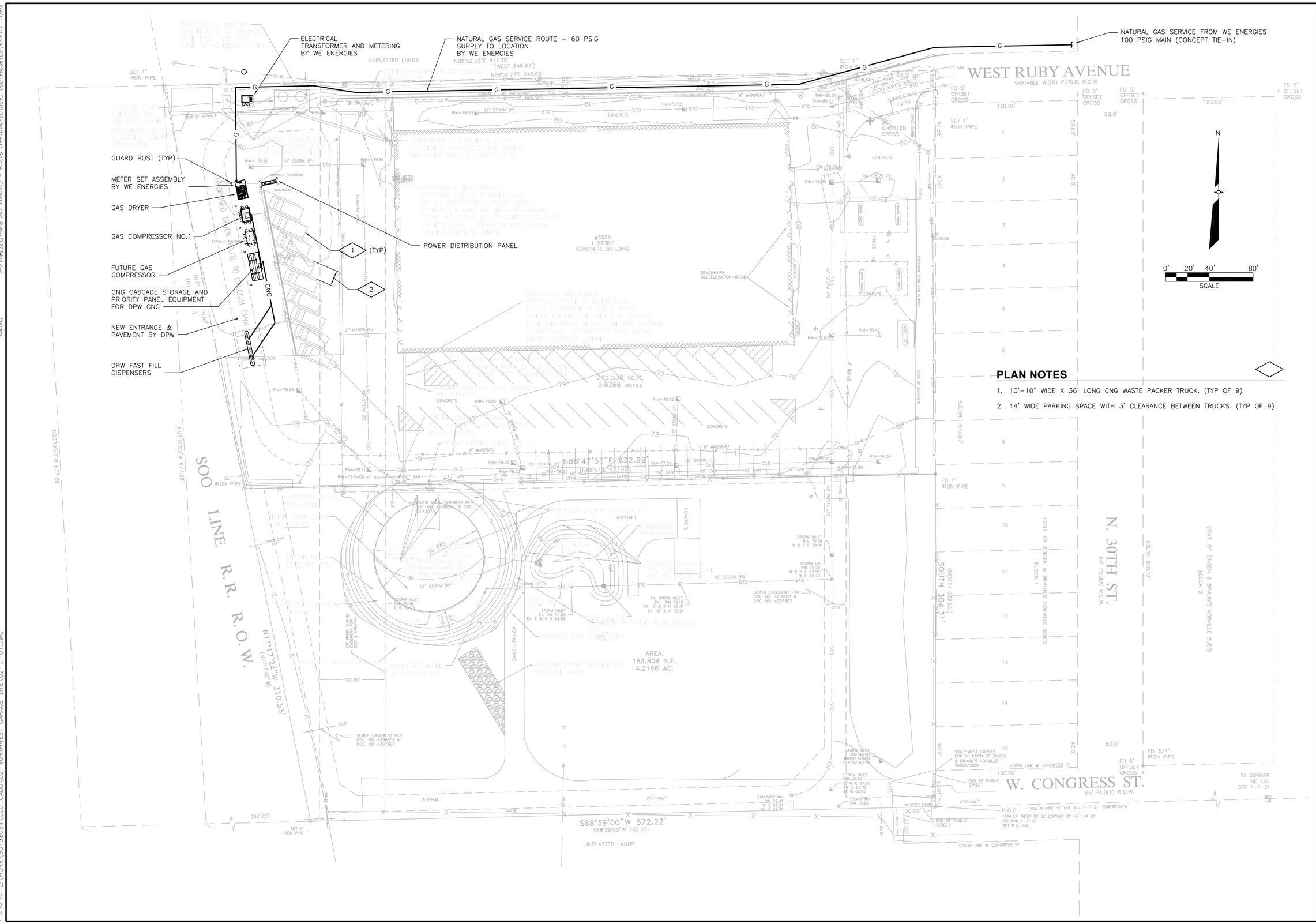

PLAN NOTES

1. 10'-10" WIDE X 36' LONG CNG WASTE PACKER TRUCK. (TYP OF 9)
2. 14' WIDE PARKING SPACE WITH 3' CLEARANCE BETWEEN TRUCKS. (TYP OF 9)

NO	REVISIONS	DRN	CHK	DATE
A	ISSUED FOR BID	BEH	BKL	05/31/11

DRN	BEH	MAY 2011
DES	BKL	MAY 2011
CHK		MAY 2011
APP	BKL	MAY 2011

AECOM
4135 TECHNOLOGY PARKWAY
SHEBOYGAN, WI 53083-1883
T 920.458.8711 F 920.458.0537
WWW.AECOM.COM

COMPRESSED NATURAL GAS FUELING SYSTEMS
NORTHWEST GARAGE SITE
MILWAUKEE, WISCONSIN

CIVIL
NEW FACILITIES AND PIPING PLAN

DATE	MAY 2011
PROJECT NO	60198094
FILENAME	02-C-01.dwg
FILE NO	
SHEET NO	30
DRAWING NO	02-C-01

Xrefs: L:\work\60198094\000_CAD\02-Northwest Garage - Congress and Ruby\E12234bd.dwg
L:\work\60198094\000_CAD\02-Northwest Garage - Congress and Ruby\C-FAC-01-N.dwg
L:\work\60198094\000_CAD\02-Northwest Garage Site\SURVEY\GPD01020.dwg
L:\work\60198094\000_CAD\02-Northwest Garage Site\SURVEY\ASHPLN.dwg
Images:
Plotted By: hansmannb
Plot File Date Created: May/28/2011 3:52 PM
Layout-Sheet Name: LAYOUT
Filename: L:\WORK\60198094\000_CADD\02-NORTHWEST GARAGE SITE\02-C-01.DWG

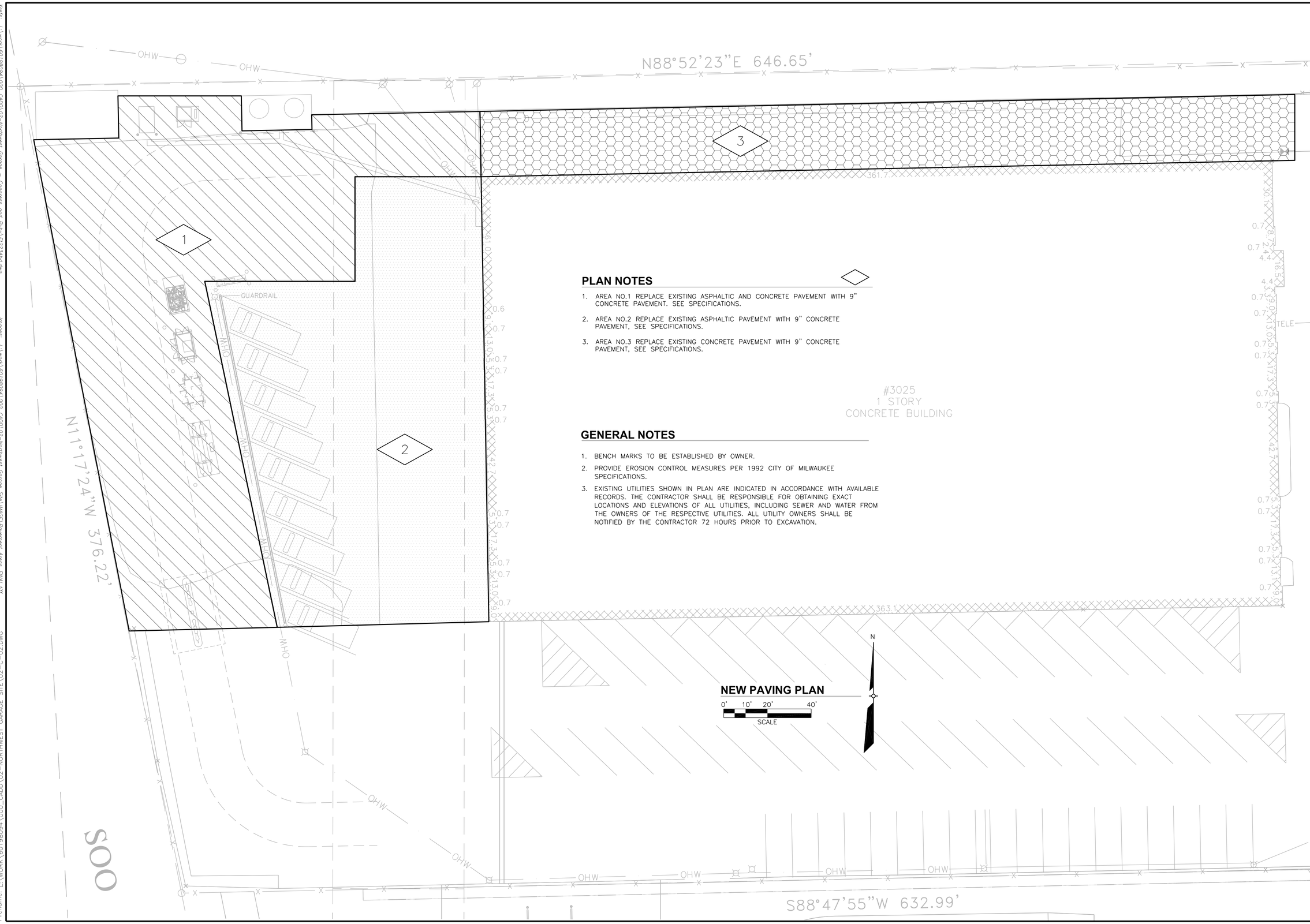

PLAN NOTES

1. AREA NO.1 REPLACE EXISTING ASPHALTIC AND CONCRETE PAVEMENT WITH 9" CONCRETE PAVEMENT. SEE SPECIFICATIONS.
2. AREA NO.2 REPLACE EXISTING ASPHALTIC PAVEMENT WITH 9" CONCRETE PAVEMENT, SEE SPECIFICATIONS.
3. AREA NO.3 REPLACE EXISTING CONCRETE PAVEMENT WITH 9" CONCRETE PAVEMENT, SEE SPECIFICATIONS.

GENERAL NOTES

1. BENCH MARKS TO BE ESTABLISHED BY OWNER.
2. PROVIDE EROSION CONTROL MEASURES PER 1992 CITY OF MILWAUKEE SPECIFICATIONS.
3. EXISTING UTILITIES SHOWN IN PLAN ARE INDICATED IN ACCORDANCE WITH AVAILABLE RECORDS. THE CONTRACTOR SHALL BE RESPONSIBLE FOR OBTAINING EXACT LOCATIONS AND ELEVATIONS OF ALL UTILITIES, INCLUDING SEWER AND WATER FROM THE OWNERS OF THE RESPECTIVE UTILITIES. ALL UTILITY OWNERS SHALL BE NOTIFIED BY THE CONTRACTOR 72 HOURS PRIOR TO EXCAVATION.

NEW PAVING PLAN

0' 10' 20' 40'
SCALE

NO	REVISIONS	DRN	CHK	DATE
A	ISSUED FOR BID	BEH	BKL	05/31/11

DRN	BEH	MAY 2011
DES	BKL	MAY 2011
CHK		MAY 2011
APP	BKL	MAY 2011

AECOM
4135 TECHNOLOGY PARKWAY
SHEBOYGAN, WI 53083-1883
T 920.458.8711 F 920.458.0537
WWW.AECOM.COM

COMPRESSED NATURAL GAS FUELING SYSTEMS
NORTHWEST GARAGE SITE
MILWAUKEE, WISCONSIN

CIVIL
NEW PAVING PLAN

DATE	MAY 2011
PROJECT NO	60198094
FILENAME	02-C-02.dwg
FILE NO	
SHEET NO	31
DRAWING NO	02-C-02

Xrefs: L:\work\60198094\000_CADD\02-Northwest Garage - Congress and Ruby\E12234bd.dwg
L:\work\60198094\000_CADD\02-Northwest Garage - Congress and Ruby\C-FAC-01-N.dwg
L:\work\60198094\000_CADD\02-Northwest Garage Site\SURVEY\GPD01220.dwg
L:\work\60198094\000_CADD\02-Northwest Garage Site\SURVEY\ASHPLN.dwg
Images: L:\work\60198094\000_CADD\02-Northwest Garage Site\MAGE\Pavement Areas_FINAL.tif
Plotted By: hansmannb
Plot File Date Created: May/28/2011 1:46 PM
Layout-Sheet Name: LAYOUT
Filename: L:\WORK\60198094\000_CADD\02-NORTHWEST GARAGE SITE\02-C-02.DWG

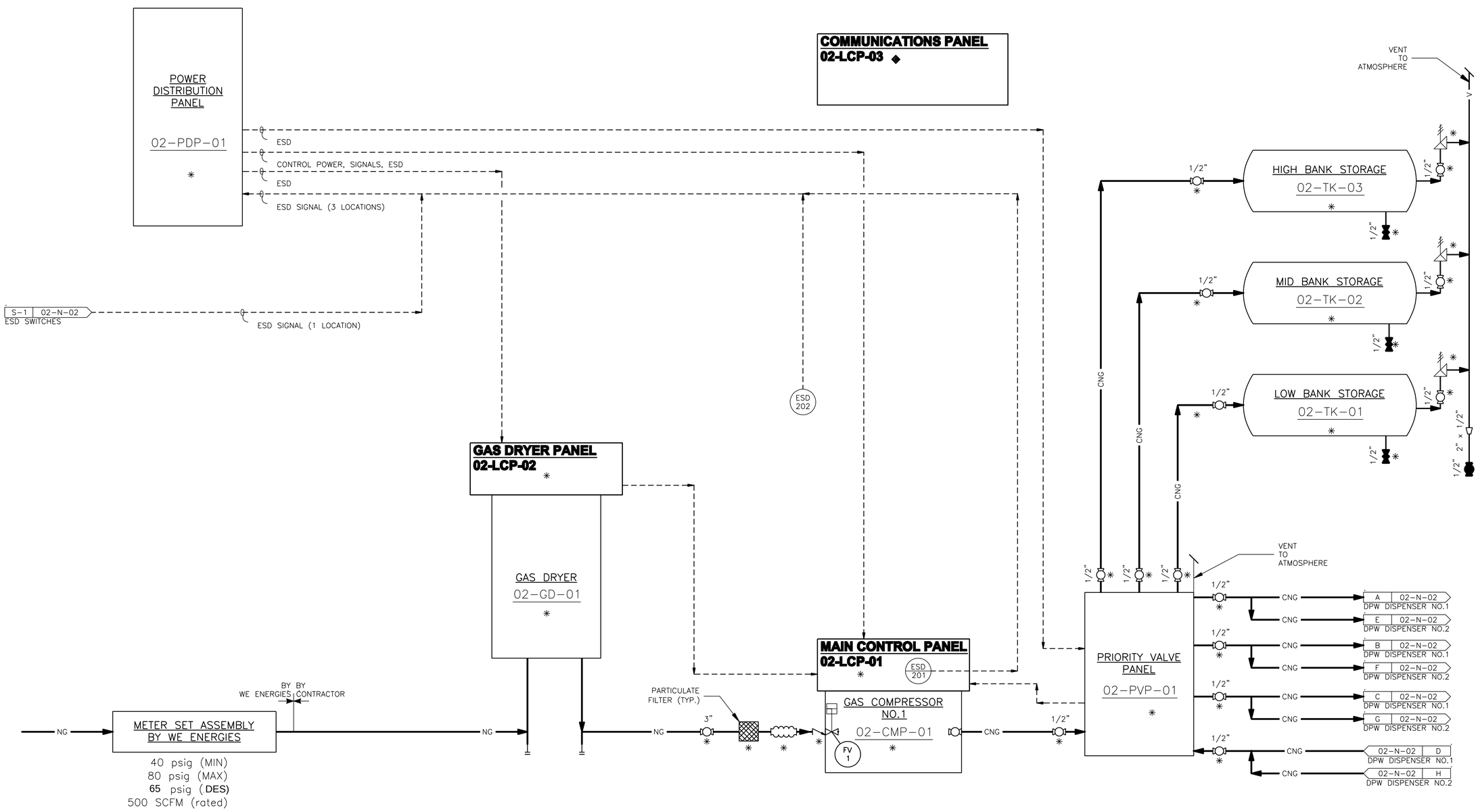

GENERAL NOTES:

1. NETWORK COMMUNICATIONS TO BE SHOWN IN ADDENDUM NO. 1.
2. THIS DRAWING IS NOT A PIPING DIAGRAM.
3. SEE M DRAWINGS FOR PIPING CONFIGURATIONS.
4. * = OWNER FURNISHED EQUIPMENT TO BE INSTALLED AND WIRED ACCORDING TO DIVISION 26 AND 40.

NO	REVISIONS	DRN	CHK	DATE
A	ISSUED FOR BID	DRH	BKL	05/31/11

DRN	DRH	MAY 2011
DES	DRH	MAY 2011
CHK	BKL	MAY 2011
APP	BKL	MAY 2011

AECOM
4135 TECHNOLOGY PARKWAY
SHEBOYGAN, WI 53083-1883
T 920.458.8711 F 920.458.0537
WWW.AECOM.COM

COMPRESSED NATURAL GAS FUELING SYSTEMS
NORTHWEST GARAGE SITE
MILWAUKEE, WISCONSIN

PROCESS AND INSTRUMENTATION
GAS COMPRESSION AND STORAGE

DATE	MAY 2011
PROJECT NO	60198094
FILENAME	02-N-01.dwg
FILE NO	
SHEET NO	32
DRAWING NO	02-N-01

Plotted By: haused
Plot File Date Created: May/27/2011 1:40 PM
Layout-Sheet Name: 02-N-01
Filename: L:\WORK\60198094\000_CADD\02-NORTHWEST GARAGE SITE\PID_2008\02-N-01.DWG

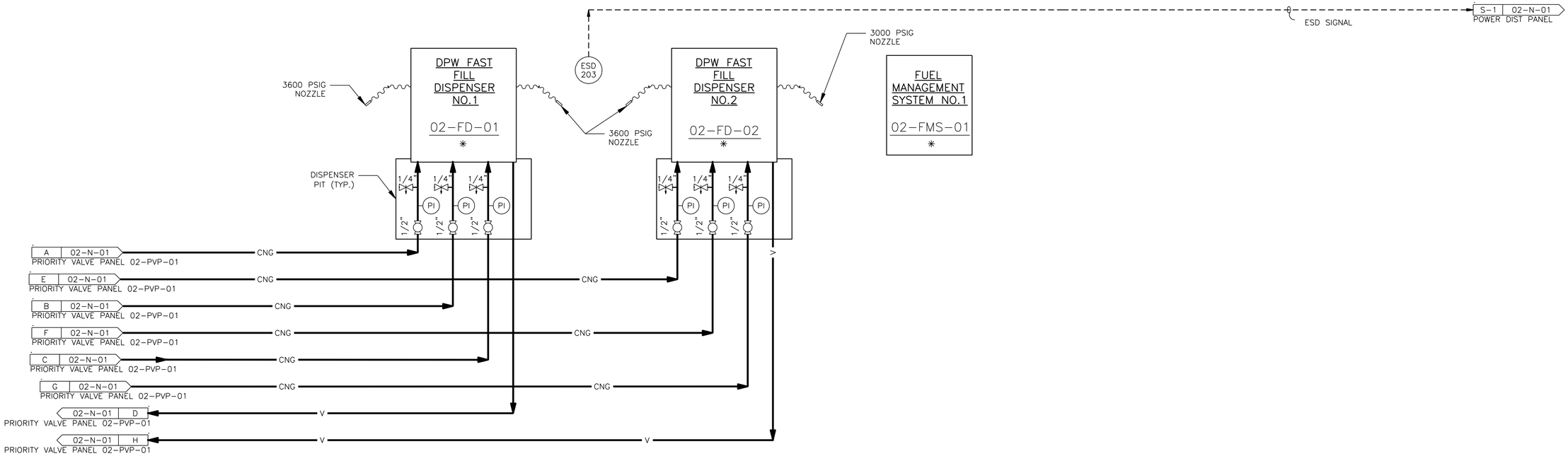

GENERAL NOTES:

1. NETWORK COMMUNICATIONS TO BE SHOWN IN ADDENDUM NO. 1.
2. THIS DRAWING IS NOT A PIPING DIAGRAM.
3. SEE M DRAWINGS FOR PIPING CONFIGURATIONS.
4. * = OWNER FURNISHED EQUIPMENT TO BE INSTALLED AND WIRED ACCORDING TO DIVISION 26 AND 40.

NO	REVISIONS	DRN	CHK	DATE
A	ISSUED FOR BID	DRH	BKL	05/31/11

DRN	DRH	MAY 2011
DES	DRH	MAY 2011
CHK	BKL	MAY 2011
APP	BKL	MAY 2011

AECOM
4135 TECHNOLOGY PARKWAY
SHEBOYGAN, WI 53083-1883
T 920.458.8711 F 920.458.0537
WWW.AECOM.COM

COMPRESSED NATURAL GAS FUELING SYSTEMS
NORTHWEST GARAGE SITE
MILWAUKEE, WISCONSIN

PROCESS AND INSTRUMENTATION
CNG STORAGE AND DISPENSING

DATE	MAY 2011
PROJECT NO	60198094
FILENAME	02-N-02.dwg
FILE NO	
SHEET NO	33
DRAWING NO	02-N-02

Plotted By: hansmannb
Plot File Date Created: May/28/2011 7:44 AM
Layout-Sheet Name: 02-N-02
Filename: L:\WORK\60198094\000_CADD\02-NORTHWEST GARAGE SITE\PID_2008\02-N-02.DWG
Images:
Xrefs: L:\work\60198094\000_CADD\02-Northwest Garage Site\E12234bd.dwg

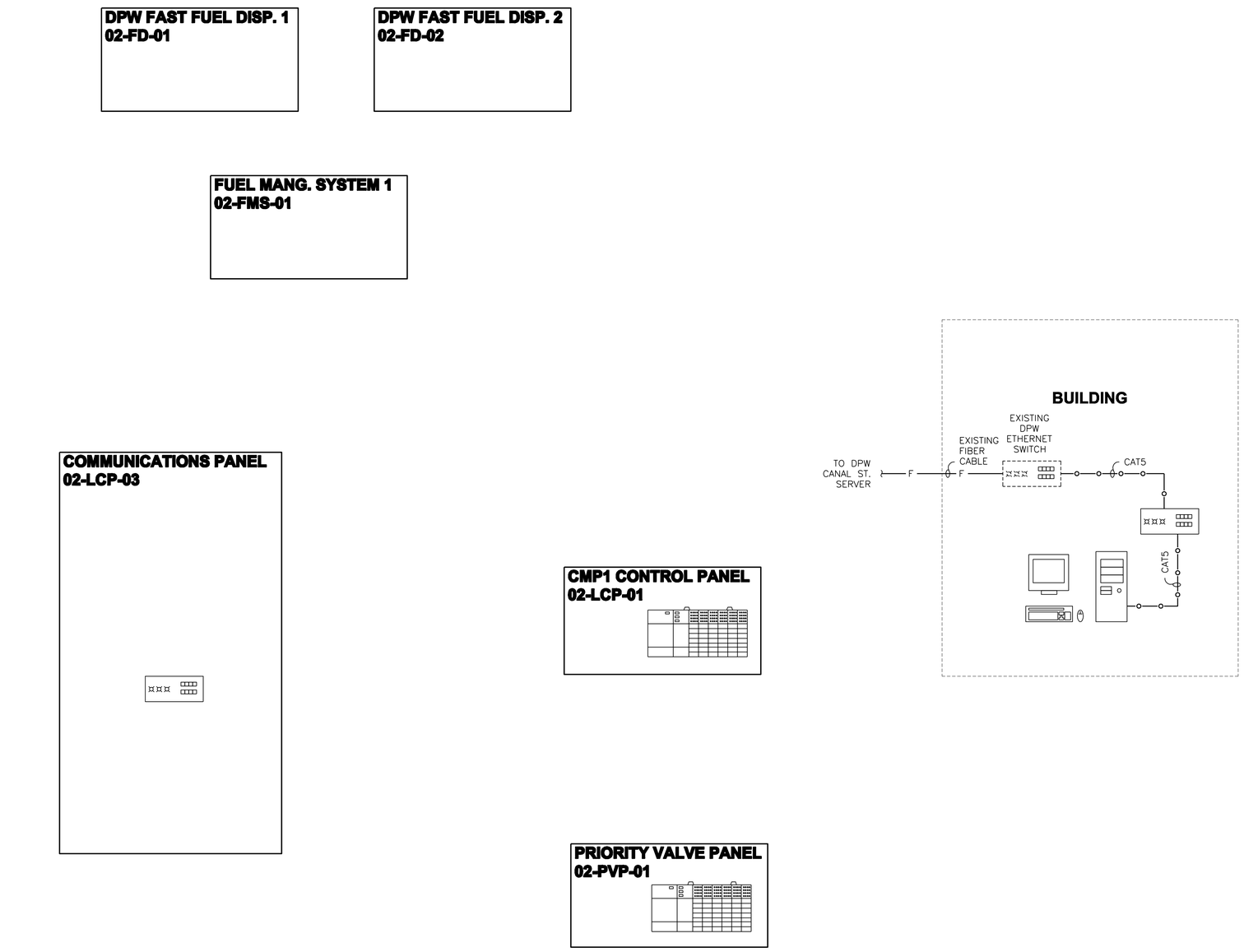

LEGEND

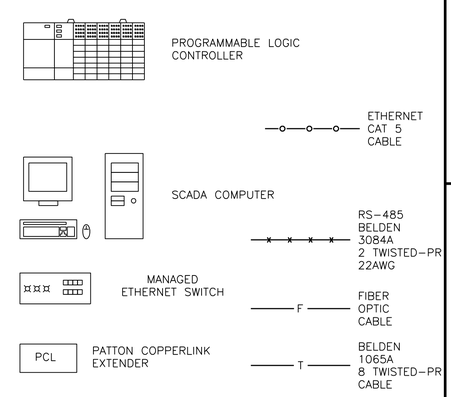

GENERAL NOTES:

1. NETWORK COMMUNICATIONS TO BE SHOWN IN ADDENDUM NO. 1.

NO	REVISIONS	DRN	CHK	DATE
A	ISSUED FOR BID	DRH	BKL	05/31/11

DRN	DRH	MAY 2011
DES	DRH	MAY 2011
CHK	BKL	MAY 2011
APP	BKL	MAY 2011

AECOM
4135 TECHNOLOGY PARKWAY
SHEBOYGAN, WI 53083-1883
T 920.458.8711 F 920.458.0537
WWW.AECOM.COM

COMPRESSED NATURAL GAS FUELING SYSTEMS
LINCOLN GARAGE & NORTHWEST GARAGE
MILWAUKEE, WISCONSIN

NORTHWEST GARAGE NETWORK DIAGRAM

DATE	MAY 2011
PROJECT NO	60198094
FILENAME	02-N-03.dwg
FILE NO	---
SHEET NO	34
DRAWING NO	02-N-03

Plotted By: haused
Plot File Date Created: May/26/2011 4:27 PM
Layout-Sheet Name: 01-N-03
Filename: L:\WORK\60198094\000_CADD\02-NORTHWEST GARAGE SITE\PID_2008\02-N-03.DWG
Images:
Xrefs: L:\work\60198094\000_CADD\00-General & 99-Standard Details\E12234bd.dwg

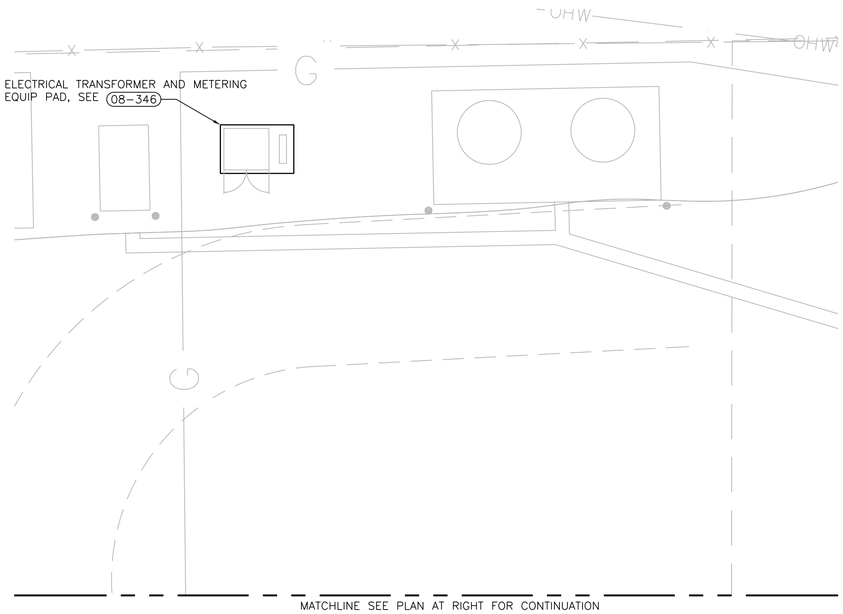

CNG STATION AND DPW FAST-FILL AREA

0' 16' 32'
SCALE

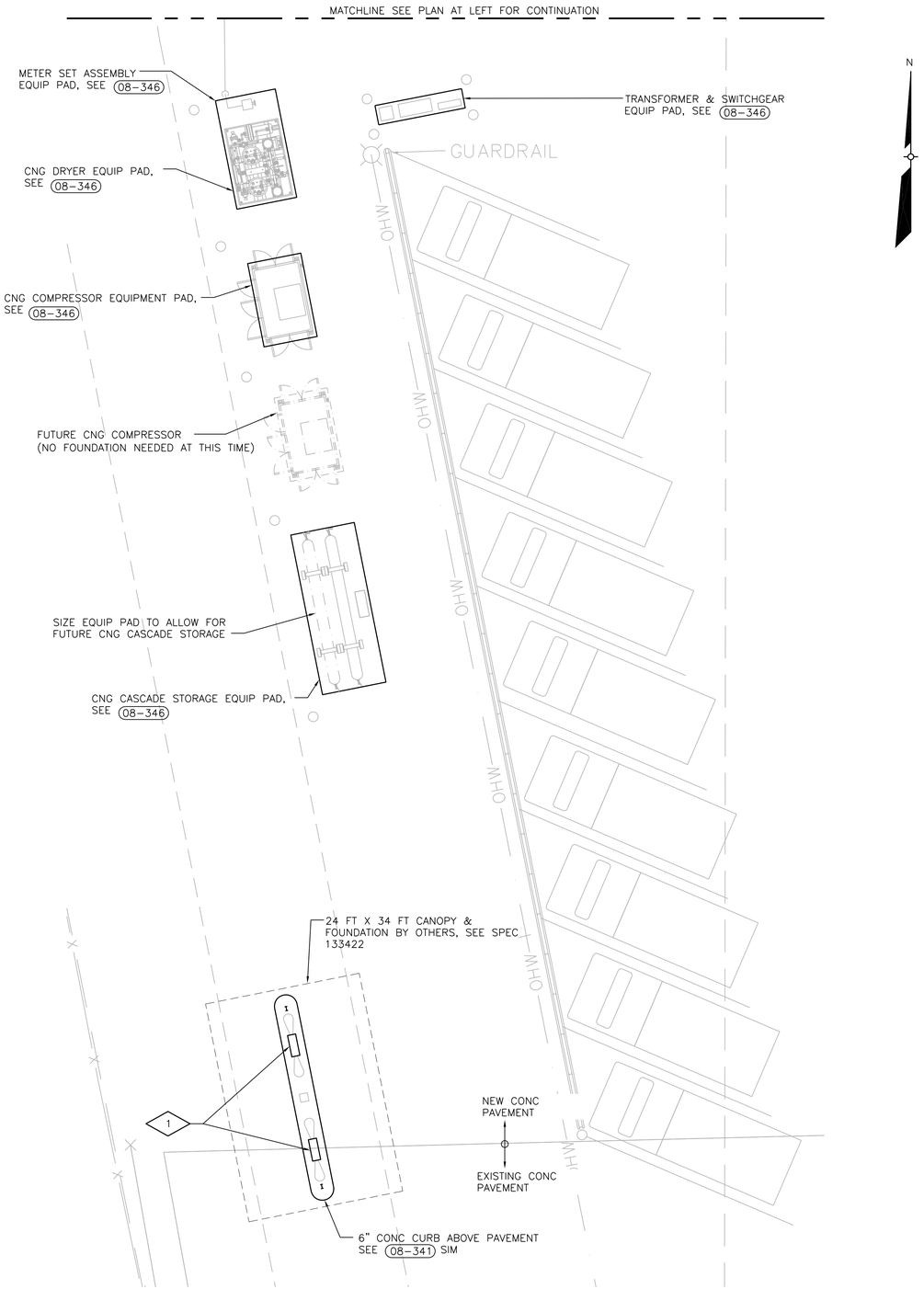

GENERAL NOTES

1. FIELD VERIFY ALL EXISTING DIMENSIONS AND ELEVATIONS.
2. CONTRACTOR TO COORDINATE EQUIPMENT PAD SIZES WITH EQUIPMENT SUPPLIER.

PLAN NOTES

1. INSTALL NEW PIT FRAME FOR CNG DISPENSER. SAWUCUT AND REMOVE EXISTING CONCRETE PAVEMENT AS REQURIED FOR PIT FRAME INSTALLATION. SEE 06-010

CNG STATION AND DPW FAST-FILL AREA

0' 16' 32'
SCALE

NO	REVISIONS	DRN	CHK	DATE
A	ISSUED FOR BID	BEH	BKL	05/31/11

DRN	BEH	MAY 2011
DES	KAG	MAY 2011
CHK		MAY 2011
APP	BKL	MAY 2011

AECOM
4135 TECHNOLOGY PARKWAY
SHEBOYGAN, WI 53083-1883
T 920.458.8711 F 920.458.0537
WWW.AECOM.COM

COMPRESSED NATURAL GAS FUELING SYSTEMS
NORTHWEST GARAGE SITE
MILWAUKEE, WISCONSIN

STRUCTURAL
CNG STATION AND DPW FAST-FILL AREA

DATE	MAY 2011
PROJECT NO	60198094
FILENAME	02-S-01.dwg
FILE NO	
SHEET NO	35
DRAWING NO	02-S-01

Xrefs: L:\work\60198094\000_CADD\02-Northwest Garage - Congress and Ruby\E12234bd.dwg
L:\work\60198094\000_CADD\02-Northwest Garage - Congress and Ruby\C-FAC-01-N.dwg
L:\work\60198094\000_CADD\02-Northwest Garage Site\SURVEY\GPD01020.dwg
L:\work\60198094\000_CADD\02-Northwest Garage Site\SURVEY\ASHPLN.dwg
Images:
Plotted By: hansmannb
Plot File Date Created: May/27/2011 9:29 PM
Layout-Sheet Name: LAYOUT
Filename: L:\WORK\60198094\000_CADD\02-NORTHWEST GARAGE SITE\02-S-01.DWG

GENERAL NOTES

1. LOCATE ALL EXISTING UNDERGROUND PIPING, CONDUIT, AND INFRASTRUCTURE PRIOR TO TRENCH EXCAVATION.
2. ✳ INDICATES FURNISHED BY ANGI SHIPPED LOOSE.

PLAN NOTES

1. INSTALL FAST FILL DISPENSER 02-FD-01 (FURNISHED BY ANGI). SEE DETAIL 06-010.
2. INSTALL FAST FILL DISPENSER 02-FD-02 (FURNISHED BY ANGI). SEE DETAIL 06-010.
3. INSTALL "ASSET WORKS" FUEL FOCUS RF, 12-HOSE, ISLAND CONTROL UNIT (ICU), 02-FMS-01 (FURNISHED BY OWNER).
4. PROVIDE (3) PARALLEL RUNS OF 1/2" X 0.065" SA TYPE 316 SS CONTINUOUS COIL TUBING INSIDE SINGLE 4" HDPE OR PVC SLEEVE TO DISPENSER. SEE TRENCH DETAIL 06-070 OR COORDINATE WITH ELECTRICAL TRENCH DETAIL 10-450.
5. PROVIDE (4) PARALLEL RUNS OF 1/2" X 0.065" SA TYPE 316 SS CONTINUOUS COIL TUBING INSIDE SINGLE 4" HDPE OR PVC SLEEVE TO DISPENSER (ONE RUN IS FOR DISPENSER VENT). SEE TRENCH DETAIL 06-070 OR COORDINATE WITH ELECTRICAL TRENCH DETAIL 10-450.
6. PROVIDE UNDERGROUND RISER PER DETAIL 06-050.
7. PROVIDE 1/2"X 0.0.065" SA 213 TYPE 316 SS TUBING FROM PRIORITY VALVE PANEL TO CNG VESSELS.
8. PROVIDE TWO (2) PARALLEL RUNS OF 1/2"X0.065" SA TYPE 316 SS CONTINUOUS COIL TUBING. INSTALL TUBING INSIDE SINGLE 4" HDPE OR PVC SLEEVE. SEE TRENCH DETAIL 10-450.
9. SEE VENT MANIFOLD DETAIL 06-020.

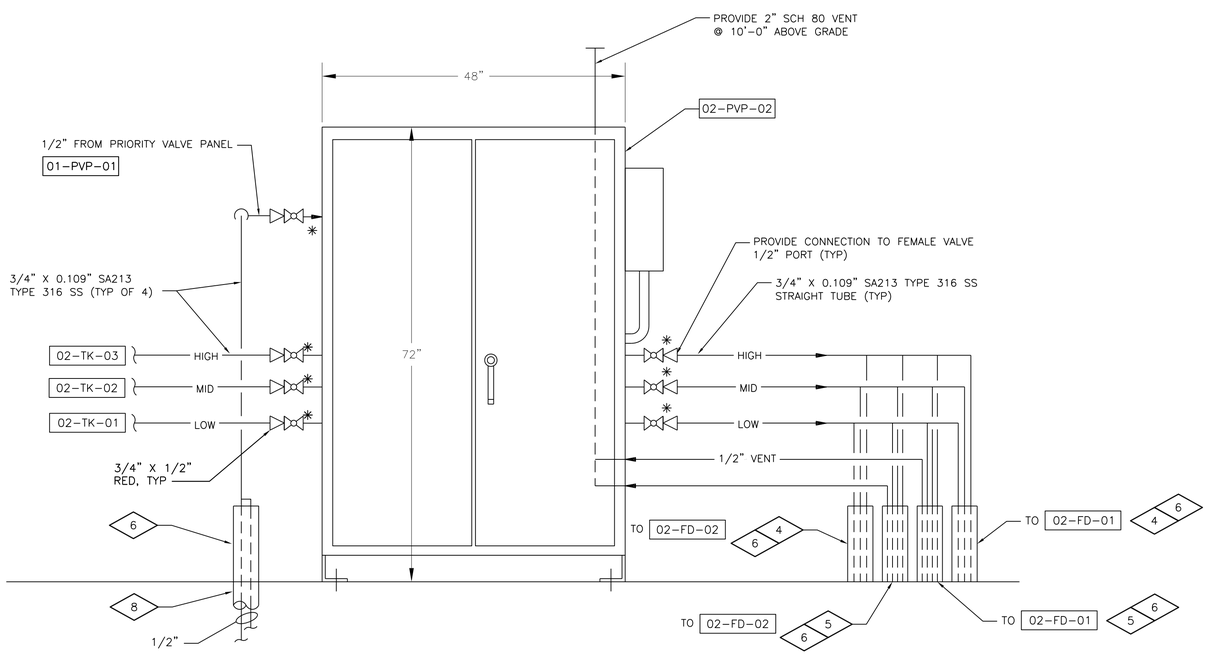

✳ 1/2" BALL VALVES (FEMALE PORT) FURNISHED BY ANGI WITH PANEL

PRIORITY VALVE PANEL DETAIL 1

NTS

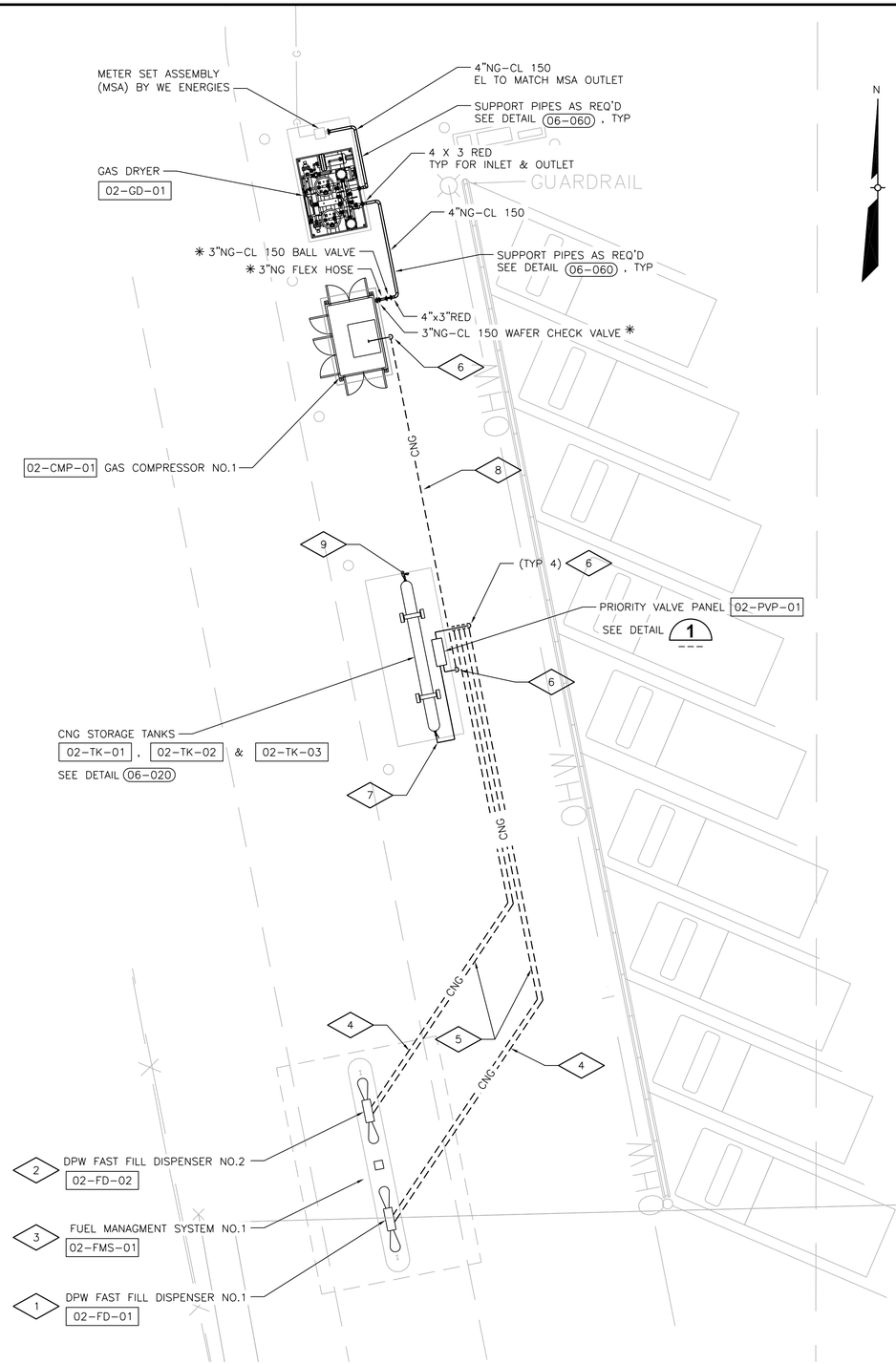

CNG STATION AND DPW FAST-FILL AREA

0' 16' 32'
SCALE

NO	REVISIONS	DRN	CHK	DATE
A	ISSUED FOR BID	BEH	BKL	05/31/11

DRN	BEH	MAY 2011
DES	JJB	MAY 2011
CHK		MAY 2011
APP	BKL	MAY 2011

AECOM
4135 TECHNOLOGY PARKWAY
SHEBOYGAN, WI 53083-1883
T 920.458.8711 F 920.458.0537
WWW.AECOM.COM

COMPRESSED NATURAL GAS FUELING SYSTEMS
NORTHWEST GARAGE SITE
MILWAUKEE, WISCONSIN

MECHANICAL
CNG STATION AND DPW FAST-FILL AREA

DATE	MAY 2011
PROJECT NO	60198094
FILENAME	02-M-01.dwg
FILE NO	
SHEET NO	36
DRAWING NO	02-M-01

Xrefs: L:\work\60198094\000_CADD\02-Northwest Garage - Congress and Ruby\E1223ebd.dwg
L:\work\60198094\000_CADD\02-Northwest Garage - Congress and Ruby\C-FAC-01-N.dwg
L:\work\60198094\000_CADD\02-Northwest Garage Site\SURVEY\GPD01020.dwg
L:\work\60198094\000_CADD\02-Northwest Garage Site\SURVEY\ASIPLN.dwg
Images:
Plotted By: hansmannb
Plot File Date Created: May/28/2011 5:25 PM
Layout-Sheet Name: LAYOUT
Filename: L:\WORK\60198094\000_CADD\02-NORTHWEST GARAGE SITE\02-M-01.DWG

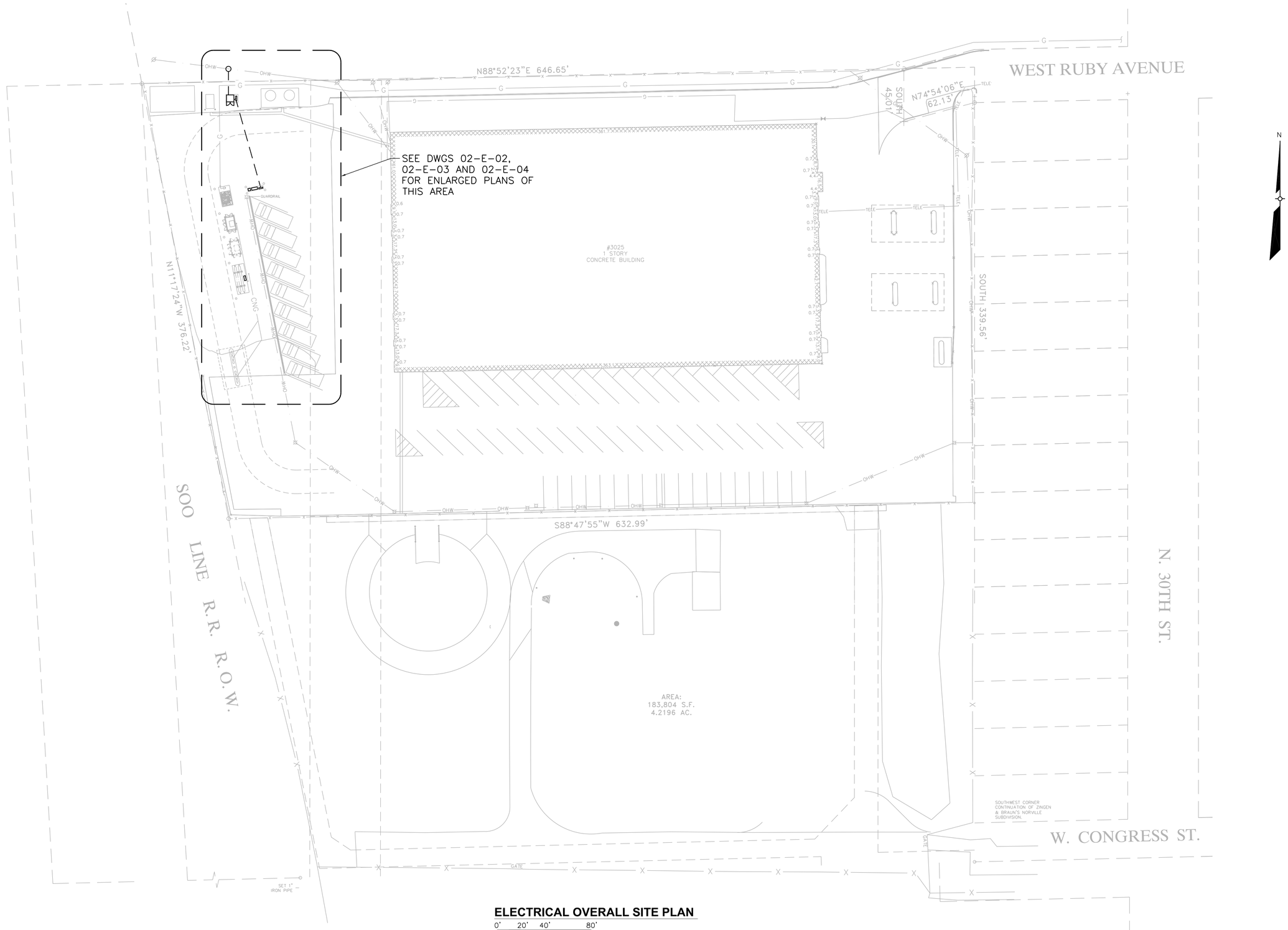

ELECTRICAL OVERALL SITE PLAN

0' 20' 40' 80'
SCALE

NO	REVISIONS	DRN	CHK	DATE
A	ISSUED FOR BID	DNK	BKL	05/31/11

DRN	DMK	MAY 2011
DES	DMK	MAY 2011
CHK	EDM	MAY 2011
APP	BKL	MAY 2011

AECOM
4135 TECHNOLOGY PARKWAY
SHEBOYGAN, WI 53083-1883
T 920.458.8711 F 920.458.0537
WWW.AECOM.COM

COMPRESSED NATURAL GAS FUELING SYSTEMS
NORTHWEST GARAGE SITE
MILWAUKEE, WISCONSIN

ELECTRICAL
OVERALL SITE PLAN

DATE	MAY 2011
PROJECT NO	60198094
FILENAME	02-E-01.dwg
FILE NO	
SHEET NO	37
DRAWING NO	02-E-01

Xrefs: L:\work\60198094\000_CADD\02-Northwest Garage - Congress and Ruby\E12234bd.dwg
L:\work\60198094\000_CADD\02-Northwest Garage - Congress and Ruby\C-FAC-01-N.dwg
L:\work\60198094\000_CADD\02-Northwest Garage Site\SURVEY\GPD01020.dwg
L:\work\60198094\000_CADD\02-Northwest Garage Site\SURVEY\ASHPLN.dwg
Images:
Plotted By: hansmannb
Plot File Date Created: May/28/2011 3:54 PM
Layout-Sheet Name: LAYOUT
Filename: L:\WORK\60198094\000_CADD\02-NORTHWEST GARAGE SITE\02-E-01.DWG

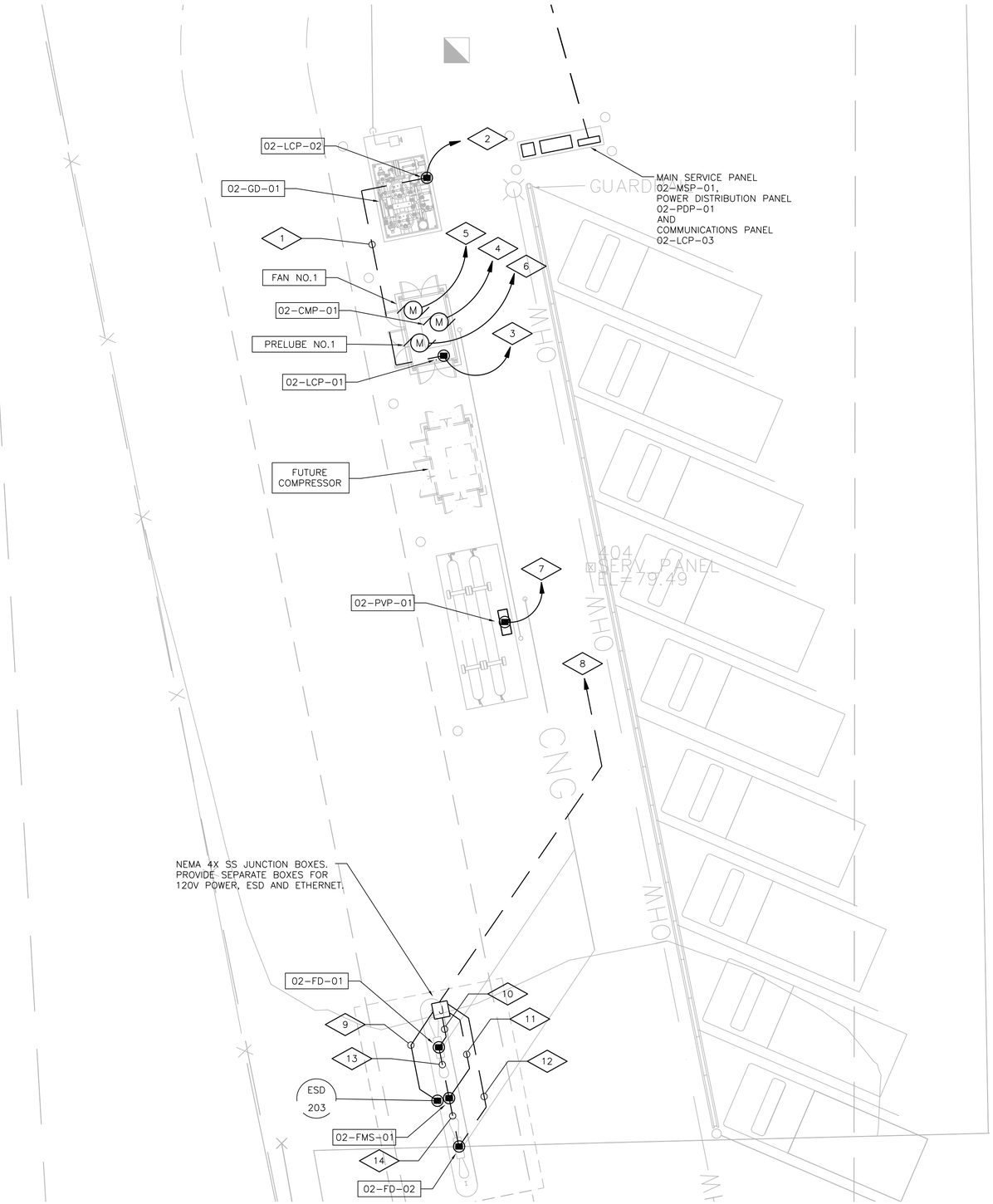

CNG STATION AND DPW FAST-FILL AREA

0' 8' 16' 32'
SCALE

N

GENERAL NOTES

1. FOR ELECTRICAL OVERALL SITE PLAN, SEE DRAWING 02-E-01.
2. FOR ONE-LINE DIAGRAM, SEE DRAWING 02-E-05.
3. FOR GROUNDING, SEE DRAWING 02-E-03.
4. FOR HAZARDOUS CLASSIFICATIONS, SEE DRAWING 02-E-04.
5. FOR GAS PIPING/ELECTRICAL CONDUIT, SEE DETAIL (10-450).

PLAN NOTES

1. 1-COMM CABLE TBD, 1" GRS, 02-LCP-01 TO 02-LCP-02
2. 3#10, 1#10 GRD, 1" SCHEDULE 80 PVC, 02-LCP-02 480V POWER, FROM 02-PDP-01
   2#14, 1#14 GRD, 1" SCHEDULE 80 PVC, ESD SHUTDOWN, 02-PDP-01 TO 02-LCP-02
   1-COMM CABLE TBD, 1" GRS, 02-LCP-02 TO 02-LCP-03
3. 2#12, 1#12 GRD, 02-LCP-01 120V POWER, FROM 02-PDP-01
   2#12, 1#12 GRD, ENCLOSURE LIGHT/HEAT 120V POWER, FROM 02-PDP-01
   } 1" SCHEDULE 80 PVC
   6#14, 1#'4 GRD, 1" SCHEDULE 80 PVC, ESD SIGNALS, 02-LCP-01 TO 02-PDP-01
   1-COMM CABLE TBD, 1" GRS, 02-LCP-01 TO 02-LCP-03
4. 3#500 KCMIL, 1#1 GRD, 3" SCHEDULE 80 PVC, 02-CMP-01 480V POWER, FROM 02-PDP-01
5. 3#12, 1#12 GRD, 1" SCHEDULE 80 PVC, FAN NO. 1 480V POWER, FROM 02-PDP-01
6. 3#12, 1#12 GRD, 1" SCHEDULE 80 PVC, PRELUBE NO. 1 480V POWER, FROM 02-PDP-01
7. 2#10, 1#10 GRD, 1" SCHEDULE 80 PVC, 02-PVP-01 120V POWER, FROM 02-PDP-01
   2#14, 1#14 GRD, 1" SCHEDULE 80 PVC, ESD SHUTDOWN, 02-PDP-01 TO 02-PVP-01
   1-COMM CABLE TBD, 1" GRS, 02-PVP-01 TO 02-LCP-03
8. 2#10, 1#10 GRD, 02-FD-01 120V POWER, FROM 02-PDP-01
   2#10, 1#10 GRD, 02-FD-02 120V POWER, FROM 02-PDP-01
   2#10, 1#10 GRD, 02-FMS-01 120V POWER, FROM 02-PDP-01
   } 1" SCHEDULE 80 PVC
   2#14, 1#14 GRD, 1" SCHEDULE 80 PVC, ESD-203 SIGNAL, TO 02-PDP-01
   1-COMM CABLE TBD, 1" GRS, 02-FMS-01 TO 02-LCP-03
9. 2#14, 1#14 GRD, 3/4" GRS, ESD-203 SIGNAL, TO 02-PDP-01
10. 2#10, 1#10 GRD, 3/4" GRS, 02-FD-01 120V POWER, FROM 02-PDP-01
11. 2#10, 1#10 GRD, 3/4" GRS, 02-FMS-01 120V POWER, FROM 02-PDP-01
    1-COMM CABLE TBD, 3/4" GRS, 02-FMS-01 TO 02-LCP-03
12. 2#10, 1#10 GRD, 3/4" GRS, 02-FD-02 120V POWER, FROM 02-PDP-01
13. 1-COMM CABLE TBD, 3/4" GRS, 02-FD-01 TO 02-FMS-01
14. 1-COMM CABLE TBD, 3/4" GRS, 02-FD-02 TO 02-FMS-01

NO	REVISIONS	DRN	CHK	DATE
A	ISSUED FOR BID	DMK	BKL	05/31/11

DRN	DMK	MAY 2011
DES	DMK	MAY 2011
CHK	EDM	MAY 2011
APP	BKL	MAY 2011

AECOM
4135 TECHNOLOGY PARKWAY
SHEBOYGAN, WI 53083-1883
T 920.458.8711 F 920.458.0537
WWW.AECOM.COM

COMPRESSED NATURAL GAS FUELING SYSTEMS
NORTHWEST GARAGE SITE
MILWAUKEE, WISCONSIN

ELECTRICAL
CNG STATION AND DPW FAST-FILL AREA

DATE	MAY 2011
PROJECT NO	60198094
FILENAME FILE NO	02-E-02.dwg
SHEET NO	38
DRAWING NO	02-E-02

Xrefs: L:\work\60198094\000_CADD\02-Northwest Garage - Congress and Ruby\E12234bd.dwg
L:\work\60198094\000_CADD\02-Northwest Garage - Congress and Ruby\C-FAC-01-N.dwg
L:\work\60198094\000_CADD\02-Northwest Garage Site\SURVEY\GPS01220.dwg
L:\work\60198094\000_CADD\02-Northwest Garage Site\SURVEY\ASIPLN.dwg
Images:
Plotted By: hansmannb
Plot File Date Created: May/28/2011 3:56 PM
Layout-Sheet Name: LAYOUT
Filename: L:\WORK\60198094\000_CADD\02-NORTHWEST GARAGE SITE\02-E-02.DWG

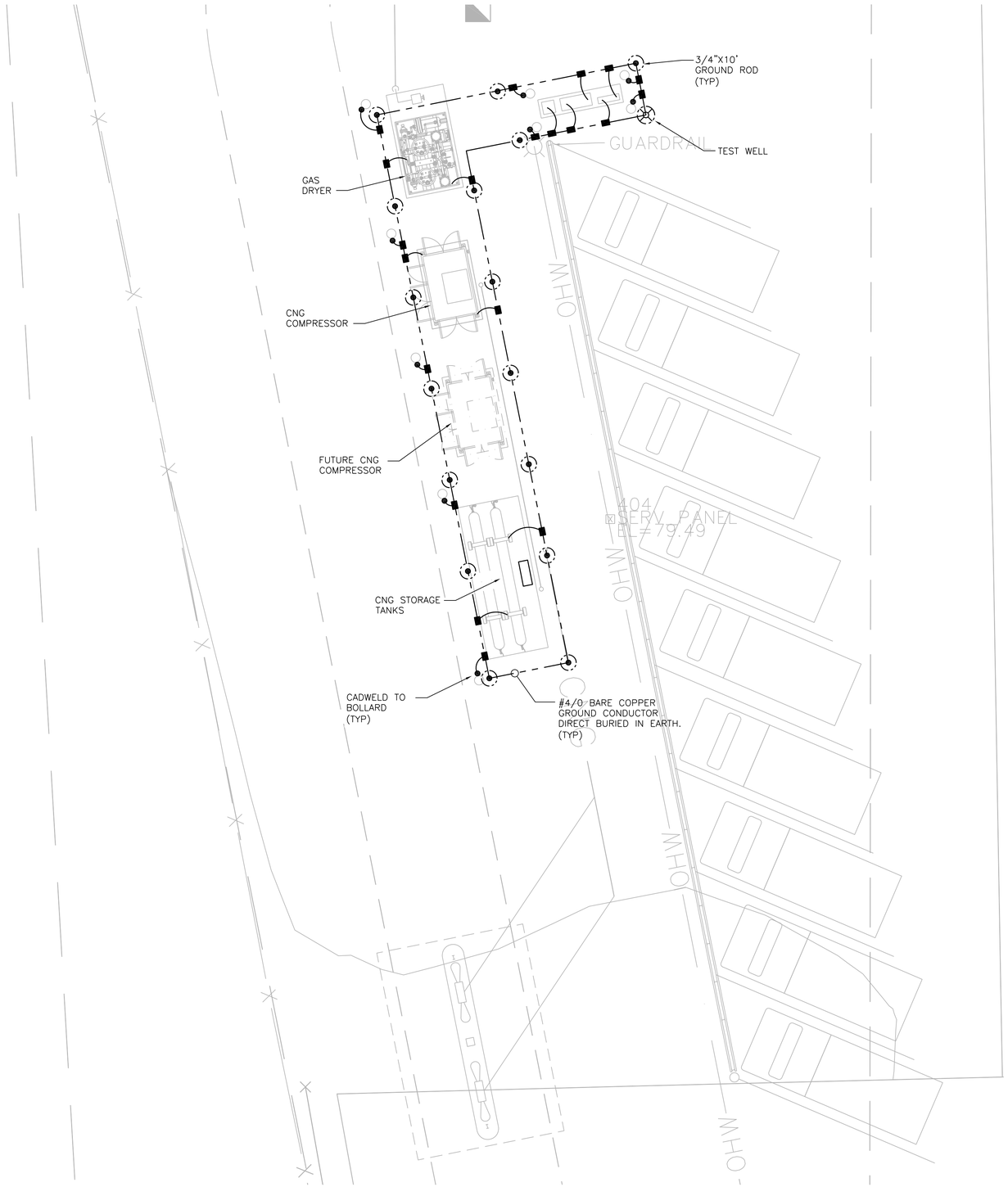

CNG STATION AND DPW FAST-FILL AREA GROUNDING

0' 5' 10' 20'
SCALE

N

GENERAL NOTES

1. FOR CONDUCTOR TO GROUND ROD CONNECTIONS, SEE DETAIL (10-451).
2. FOR EQUIPMENT GROUND CABLE STUB-UPS, SEE DETAIL (10-452).
3. FOR LINE POST GROUNDING, SEE DETAIL (10-458).
4. FOR STEEL OR METAL STRUCTURE GROUND CONNECTION, SEE DETAIL (10-453).
5. FOR TEST WELL, SEE DETAIL (10-455).

NO	REVISIONS	DRN	CHK	DATE
A	ISSUED FOR BID	DMK	BKL	05/31/11

DRN	DMK	MAY 2011
DES	DMK	MAY 2011
CHK	EDM	MAY 2011
APP	BKL	MAY 2011

AECOM
4135 TECHNOLOGY PARKWAY
SHEBOYGAN, WI 53083-1883
T 920.458.8711 F 920.458.0537
WWW.AECOM.COM

COMPRESSED NATURAL GAS FUELING SYSTEMS
NORTHWEST GARAGE SITE
MILWAUKEE, WISCONSIN

ELECTRICAL
CNG STATION AND DPW FAST-FILL AREA GROUNDING

DATE MAY 2011
PROJECT NO 60198094
FILENAME 02-E-03.dwg
FILE NO
SHEET NO 39
DRAWING NO **02-E-03**

Xrefs: L:\work\60198094\000_CADD\02-Northwest Garage - Congress and Ruby\E12234bd.dwg
L:\work\60198094\000_CADD\02-Northwest Garage - Congress and Ruby\C-FAC-01-N.dwg
L:\work\60198094\000_CADD\02-Northwest Garage Site\SURVEY\GPD01020.dwg
L:\work\60198094\000_CADD\02-Northwest Garage Site\SURVEY\ASHPLN.dwg
Images:
Plotted By: hansmannb
Plot File Date Created: May/28/2011 3:56 PM
Layout-Sheet Name: LAYOUT
Filename: L:\WORK\60198094\000_CADD\02-NORTHWEST GARAGE SITE\02-E-03.DWG

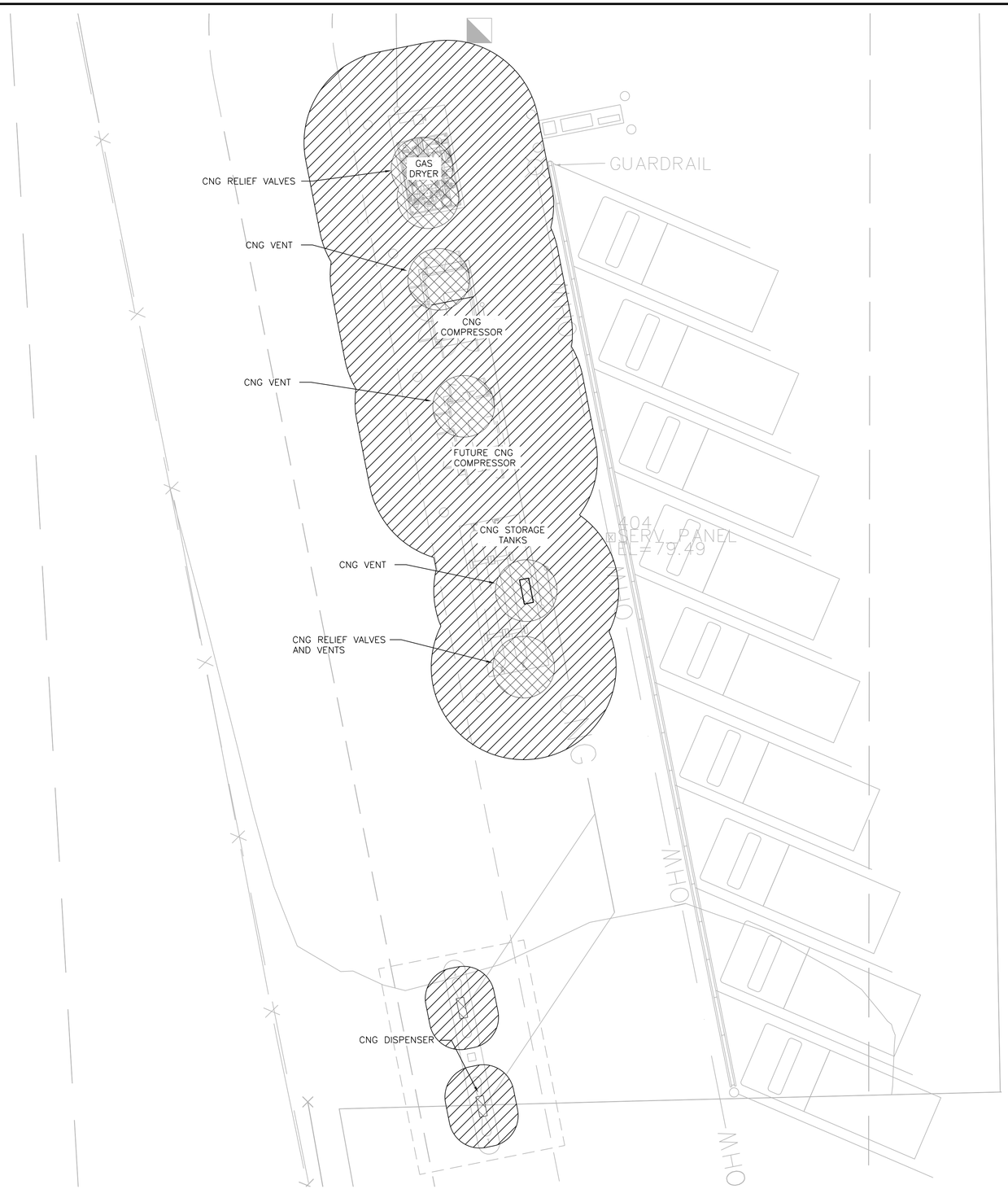

CNG STATION AND DPW FAST-FILL AREA HAZARDOUS LOCATIONS

0' 5' 10' 20'
SCALE

N

GENERAL NOTES

1. FOR DETAILS OF HAZARDOUS CLASSIFICATIONS SURROUNDING CNG DISPENSERS, SEE DETAIL (10-002).
2. FOR DETAILS OF HAZARDOUS CLASSIFICATIONS SURROUNDING CNG STORAGE TANKS, SEE DETAIL (10-003).
3. FOR DETAILS OF HAZARDOUS CLASSIFICATIONS SURROUNDING CNG RELIEF VALVES, SEE DETAIL (10-004).
4. FOR DETAILS OF HAZARDOUS CLASSIFICATIONS SURROUNDING CNG VENTS, SEE DETAIL (10-006).
5. FOR DETAILS OF HAZARDOUS CLASSIFICATIONS SURROUNDING CNG COMPRESSORS AND GAS DRYERS, SEE DETAIL (10-005).

LEGEND

- CLASS I, DIVISION 2, GROUP D
- CLASS I, DIVISION 1, GROUP D
- UNCLASSIFIED

NO	REVISIONS	DRN	CHK	DATE
A	ISSUED FOR BID	DMK	BKL	05/31/11

DRN	DMK	MAY 2011
DES	DMK	MAY 2011
CHK	EDM	MAY 2011
APP	BKL	MAY 2011

AECOM
4135 TECHNOLOGY PARKWAY
SHEBOYGAN, WI 53083-1883
T 920.458.8711 F 920.458.0537
WWW.AECOM.COM

COMPRESSED NATURAL GAS FUELING SYSTEMS
NORTHWEST GARAGE SITE
MILWAUKEE, WISCONSIN

ELECTRICAL
CNG STATION AND DPW FAST-FILL AREA HAZARDOUS LOCATIONS

DATE	MAY 2011
PROJECT NO	60198094
FILENAME FILE NO	02-E-04.dwg
SHEET NO	40
DRAWING NO	02-E-04

Xrefs: L:\work\60198094\000_CADD\02-Northwest Garage - Congress and Ruby\E12234bd.dwg
L:\work\60198094\000_CADD\02-Northwest Garage - Congress and Ruby\C-FAC-01-N.dwg
L:\work\60198094\000_CADD\02-Northwest Garage Site\SURVEY\GPD01220.dwg
L:\work\60198094\000_CADD\02-Northwest Garage Site\SURVEY\ASHPLN.dwg
Images:
Plotted By: hansmannb
Plot File Date Created: May/28/2011 3:57 PM
Layout-Sheet Name: LAYOUT
Filename: L:\WORK\60198094\000_CADD\02-NORTHWEST GARAGE SITE\02-E-04.DWG

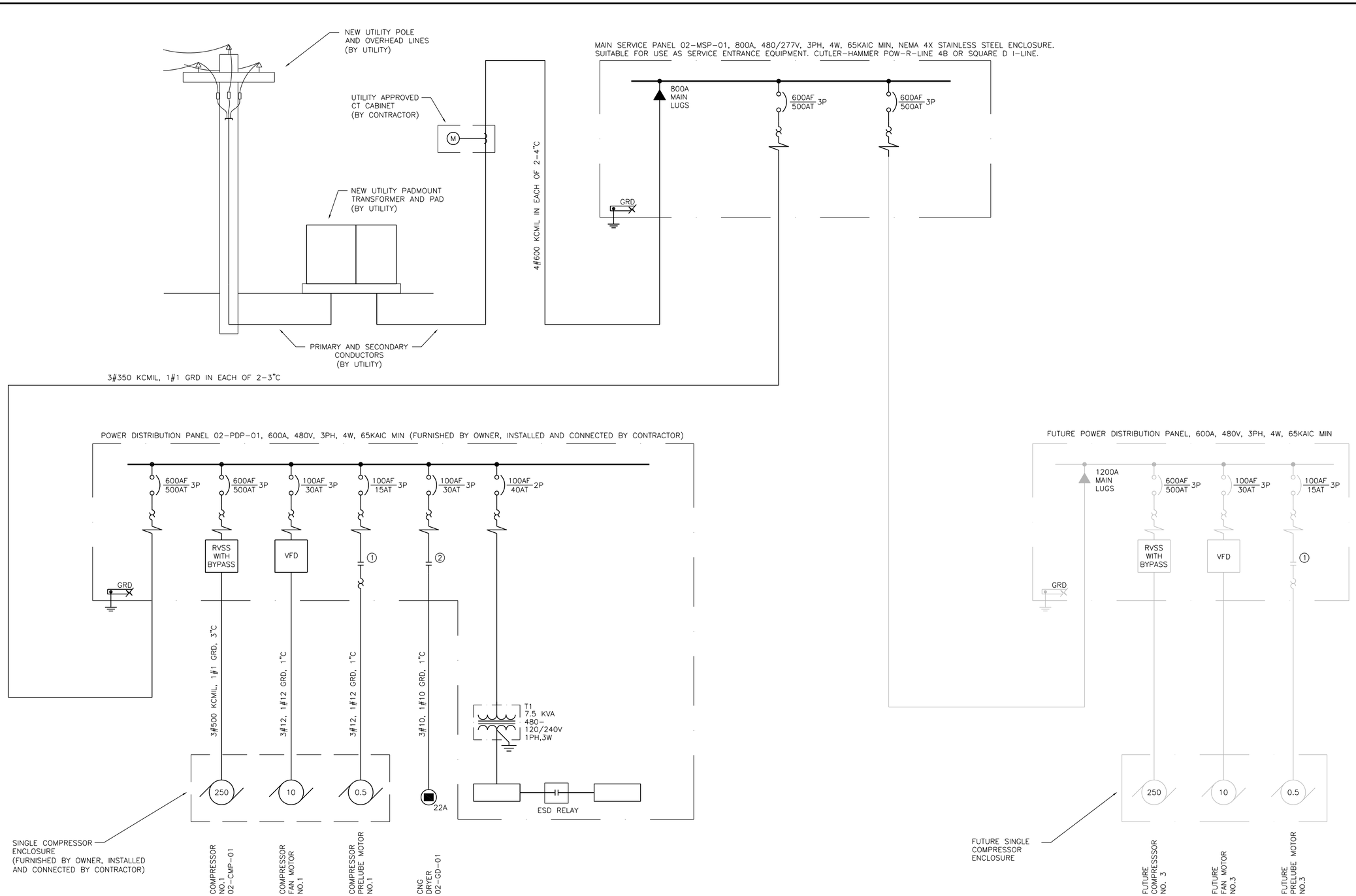

NORTHWEST GARAGE ONE-LINE DIAGRAM

NTS

NO	REVISIONS	DRN	CHK	DATE
A	ISSUED FOR BID	DMK	BEH	05/31/11

DRN	DMK	MAY 2011
DES	DMK	MAY 2011
CHK	EDM	MAY 2011
APP	BKL	MAY 2011

AECOM
4135 TECHNOLOGY PARKWAY
SHEBOYGAN, WI 53083-1883
T 920.458.8711 F 920.458.0537
WWW.AECOM.COM

COMPRESSED NATURAL GAS FUELING SYSTEMS
NORTHWEST GARAGE SITE
MILWAUKEE, WISCONSIN

ELECTRICAL ONE-LINE DIAGRAM

DATE	MAY 2011
PROJECT NO	60198094
FILENAME FILE NO	02-E-05.dwg
SHEET NO	41
DRAWING NO	02-E-05

Xrefs: L:\work\60198094\000_CADD\02-Northwest Garage - Congress and Ruby\E22340d.dwg
Images:
Plotted By: hansmannb
Plot File Date Created: May/25/2011 6:36 PM
Layout-Sheet Name: LAYOUT1
Filename: L:\WORK\60198094\000_CADD\02-NORTHWEST GARAGE SITE\02-E-05.DWG

GENERAL STRUCTURAL NOTES (08-001)

1. THE GENERAL STRUCTURAL NOTES AND STANDARD STRUCTURAL DETAILS APPLY TO THE ENTIRE PROJECT UNLESS SPECIFICALLY STATED OTHERWISE.

DESIGN CRITERIA

1. DESIGN AND CONSTRUCT IN CONFORMANCE WITH THE WISCONSIN COMMERCIAL BUILDING CODE, LATEST EDITION
   A. MECHANICAL EQUIPMENT: VERIFY WITH EQUIPMENT SUPPLIER. (SEE EQUIPMENT SCHEDULES)
   B. CANOPY ROOF SNOW LOAD:
      1. GROUND SNOW LOAD, Pg — 30 PSF+DRIFT
      2. FLAT ROOF SNOW LOAD, Pf — 23 PSF
      3. SNOW EXPOSURE FACTOR, Ce — 0.9
      4. IMPORTANCE FACTOR, I — 1.0
      5. THERMAL FACTOR, Ct — 1.2
   E. WIND LOAD:
      1. BASIC WIND SPEED, V — 90 MPH, ASCE 7-05
      2. IMPORTANCE FACTOR, I — 1.0
      3. WIND EXPOSURE — B
2. SEISMIC DESIGN DATA:
   A. ZIP CODE — 53215 (Lincoln Ave Site); 53209 (Northwest Garage Site)
   B. IMPORTANCE FACTOR, I — 1.0
   C. MAPPED SPECTRAL RESPONSE ACCELERATIONS:
      1. Ss — 0.108
      2. S1 — 0.045
   D. SITE CLASS — D
   E. SPECTRAL RESPONSE COEFFICIENTS:
      1. SDS — 0.116
      2. SD1 — 0.072
   F. SEISMIC DESIGN CATEGORY — B

FOUNDATIONS

1. NET SOIL BEARING CAPACITIES — 1500 PSF ASSUMED
2. PLACE FOOTINGS ON NATURAL UNDISTURBED EARTH OR STRUCTURAL FILL.

CONCRETE

1. REINFORCING STEEL:
   A. DEFORMED BARS — ASTM A615-GRADE 60
2. UNLESS OTHERWISE SHOWN PROVIDE COVER FOR REINFORCEMENT AS FOLLOWS:
   A. CAST AGAINST:
      1. EARTH — 3 INCHES
      2. MUD SLAB — 2 INCHES
   B. EXPOSED TO EARTH, WEATHER, OR WATER:
      1. SLABS — 2 INCHES
      2. FOOTINGS AND BASE SLAB:
         FORMED SURFACES — 2 INCHES
         TOP OF FOOTINGS AND BASE SLABS — 2 INCHES
   C. NOT EXPOSED TO EARTH, WEATHER, OR WATER: — 1 1/2 INCHES
3. DO NOT WELD OR FIELD BEND REINFORCING BARS, EXCEPT AS APPROVED BY ENGINEER.
4. CONCRETE:
   A. FENCE POST PIERS, INTERIOR EQUIPMENT BASES, AND WHERE NOTED: CLASS B — F'c=3000 PSI
   B. ALL LOCATIONS EXCEPT WHERE CLASS B IS SPECIFIED: CLASS A — F'c=4500 PSI
5. UNLESS OTHERWISE NOTED, CONSTRUCTION JOINTS SHOWN ARE OPTIONAL. CONSTRUCTION JOINTS NOT SHOWN ON THE DRAWINGS SHALL BE APPROVED BY ENGINEER.
6. LIMIT SIZE OF CONCRETE POURS. MAXIMUM LENGTH OF SLAB POURS SHALL NOT EXCEED 60 FT.
7. BEFORE CONCRETE IS PLACED, CONSTRUCTION JOINTS SHALL BE CLEANED AND LAITANCE REMOVED AND SURFACE WETTED. STANDING WATER SHALL BE REMOVED.
8. CONSTRUCTION JOINTS SHALL HAVE KEYS OR ROUGHENED SURFACES. WHERE ROUGHENED SURFACE IS USED, THE SURFACE SHALL HAVE AN AMPLITUDE OF 1/4" MIN.
9. CHAMFER EXPOSED EDGES OF CONCRETE 3/4" UNLESS OTHERWISE NOTED.
10. EQUIPMENT PAD AND CURB LOCATIONS, DIMENSIONS AND HEIGHTS TO BE COORDINATED BY CONTRACTOR. VERIFY WITH EQUIPMENT MANUFACTURER'S REQUIREMENTS.

MASONRY

1. MASONRY OPENINGS LESS THAN 4'-0" IN WIDTH THAT DO NOT HAVE A LINTEL SCHEDULED SHALL HAVE A BOND BEAM WITH 2-#5 BARS OR DOUBLE STEEL ANGLE LINTEL WITH A TOTAL WIDTH OF HORIZONTAL LEGS APPROXIMATELY 1" LESS THAN WALL THICKNESS.
2. PROVIDE A MINIMUM OF 8" BEARING AT EACH END FOR STEEL BEAM LINTELS AND BOND BEAM LINTELS AND 6" BEARING AT EACH END FOR ANGLE LINTELS UNLESS NOTED OTHERWISE.
3. UNLESS OTHERWISE SHOWN, PROVIDE A CONTINUOUS BOND BEAM AROUND THE TOP OF WALLS, REINFORCED WITH 2-#5 BARS.
4. PROVIDE HORIZONTAL MASONRY REINFORCEMENT IN WALLS AT 16" O.C. MAXIMUM UNLESS OTHERWISE NOTED.
5. FILL JAMB CORES OF OPENINGS OVER 3'-0" WIDE WITH MASONRY GROUT FROM BOTTOM OF LINTEL TO BOTTOM OF WALL. REINFORCE CORES WHERE NOTED.

METALS

1. STRUCTURAL STEEL SHAPES:
   A. W SHAPES — ASTM A992, 50 KSI
   B. S, C AND MC SHAPES — ASTM A36
   C. L SHAPES — ASTM A36
   D. HSS SQUARE AND RECTANGULAR SHAPES — ASTM A500, GRADE B, 46 KSI
   E. HSS ROUND SHAPES — ASTM A500, GRADE B, 42 KSI
   F. PIPE SHAPES — ASTM A53, GRADE B, 35 KSI
   G. PLATES AND BARS — ASTM A36
   H. STAINLESS STEEL:
      1. EXTERIOR AND SUBMERGED USES — AISI, TYPE 316
      2. CAST-IN-PLACE ANCHOR BOLTS — AISI, TYPE 302, 303 OR 304
2. CONNECTION BOLTS FOR STEEL MEMBERS — ASTM A325
3. ANCHOR BOLTS, 1/2" MINIMUM DIA: — STAINLESS STEEL
4. WELD STRUCTURAL STEEL WITH E70 ELECTRODES IN ACCORDANCE WITH A.W.S. REQUIREMENTS.

REMOVALS

1. REMOVE ALL CONCRETE ANCHORS, ANCHOR BOLTS AND OTHER EMBEDMENTS A MINIMUM OF 1" BEYOND FINISHED SURFACE AND PATCH SURFACE WITH PATCHING MORTAR TO MATCH EXISTING.
2. REMOVE CONCRETE AND REINFORCEMENT A MINIMUM OF 1" BEYOND FINISHED SURFACE AT ANY LOCATION WHERE NEW CONCRETE PAD WILL NOT COVER ROUGH SURFACE OF REMOVAL. PATCH BACK TO FINISHED SURFACE WITH PATCHING MORTAR TO MATCH ADJACENT SURFACE.

MISCELLANEOUS

1. FOR ADDITIONAL OPENINGS, ANCHORS AND EMBEDDED ITEMS SEE ARCHITECTURAL, PROCESS, PLUMBING, HVAC & ELECTRICAL DRAWINGS.
2. VERIFY PERTINENT EXISTING CONDITIONS AND DIMENSIONS BEFORE STARTING CONSTRUCTION AND/OR FABRICATION.
3. SUBMIT THE SIZE AND LAYOUT OF OPENINGS IN SLABS FOR MCC UNITS FOR APPROVAL PRIOR TO PLACEMENT OF CONCRETE.

PLAIN BAR MINIMUM REINFORCEMENT SPLICE AND ANCHORAGE LENGTH (INCHES) (08-010)

BAR SIZE IN-POUND	BAR SIZE METRIC mm	LAPPED SPLICE LENGTH		DEVELOPMENT LENGTH		STANDARD HOOK DEVELOPMENT LENGTH	COMPRESSION LAP LENGTH
		TOP BARS	OTHERS	TOP BARS	OTHERS		
3	10	25	19	19	15	6	12
4	13	33	25	25	19	7	15
5	16	41	31	31	24	9	19
6	19	49	37	37	29	11	23
7	22	71	54	54	42	12	27
8	25	81	62	62	48	14	30
9	29	91	70	70	54	16	34
10	32	101	78	78	60	17	38
11	36	111	85	85	66	19	42

NOTES:
1. TOP BARS ARE HORIZONTAL BARS SO PLACED THAT MORE THAN 12" OF CONCRETE IS CAST IN THE MEMBER BELOW THE BAR.
2. FOR BARS SPACED LESS THAN 6 BAR DIAMETERS OC INCREASE LENGTH BY 25%.
3. WHEN LAPPING TWO DIFFERENT SIZE BARS USE THE LAP LENGTH OF THE SMALLER BAR UNLESS NOTED OTHERWISE.
4. DEVELOPMENT LENGTH IS MINIMUM LENGTH OF EMBEDMENT FOR STRAIGHT DOWELS WHERE END HOOK IS NOT SHOWN, UNLESS OTHERWISE NOTED.
5. COMPRESSION LAP LENGTH FOR VERTICAL COLUMN BARS ONLY.
6. HOOKS SHALL BE ACI STANDARD UNLESS OTHERWISE NOTED.

NO	REVISIONS	DRN	CHK	DATE
A	ISSUED FOR BID	KAG	BKL	05/31/11

DRN	KAG	MAY 2011
DES	KAG	MAY 2011
CHK		MAY 2011
APP	BKL	MAY 2011

AECOM
4135 TECHNOLOGY PARKWAY
SHEBOYGAN, WI 53083-1883
T 920.458.8711 F 920.458.0537
WWW.AECOM.COM

COMPRESSED NATURAL GAS FUELING SYSTEMS
LINCOLN GARAGE & NORTHWEST GARAGE
MILWAUKEE, WISCONSIN

STRUCTURAL DETAILS

DATE MAY 2011
PROJECT NO 60198094
FILENAME 99-S-01.dwg
FILE NO
SHEET NO 60
DRAWING NO **99-S-01**

Xrefs: L:\work\60198094\000_CADD\00-General & 99-Standard Details\99-S-SDT-01.dwg
L:\work\60198094\000_CADD\00-General & 99-Standard Details\f2234bsd.dwg
Images:
Plotted By: reimess
Plot File Date Created: May/27/2011 10:49 AM
Layout-Sheet Name: LAYOUT
Filename: L:\WORK\60198094\000_CADD\00-GENERAL & 99-STANDARD DETAILS\99-S-01.DWG

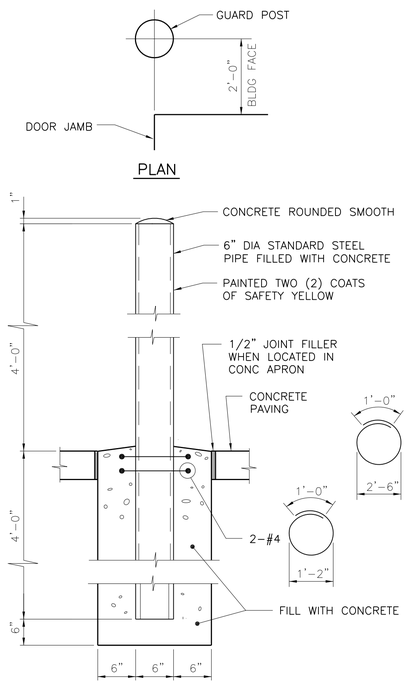

GUARD POST DETAIL (08-100)

NTS

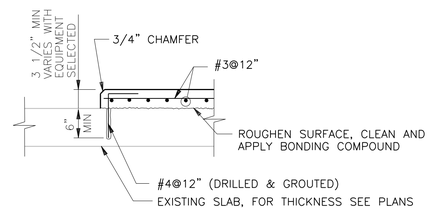

EQUIPMENT PAD DETAIL (08-341)

NTS

NOTE: FOR EQUIPMENT PAD WITH ANCHOR BOLTS SEE (08-343)

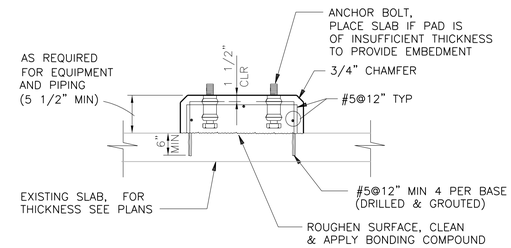

EQUIPMENT PAD DETAIL (08-343)

NTS

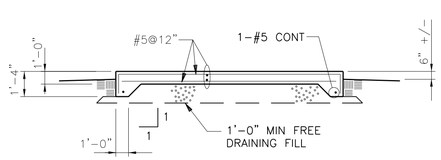

EQUIPMENT PAD DETAIL (08-346)

NTS

NOTE: AT CONTRACTORS OPTION, PAD CAN BE PLACED 1'-4" THICK THROUGHOUT.

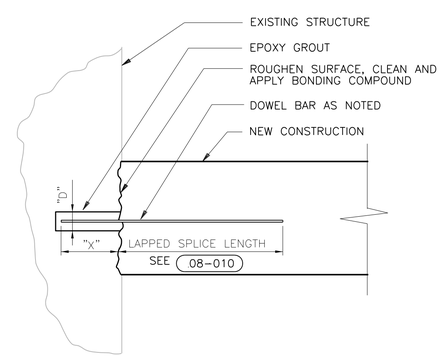

DRILLED IN DOWEL DETAIL (08-385)

NTS

NOTES:

1. EMBEDMENT "X" = 16 BAR DIAMETERS MIN UNO
2. HOLE DIAMETER "D" = AS RECOMMENDED BY EPOXY GROUT MFR.

NO	REVISIONS	DRN	CHK	DATE
A	ISSUED FOR BID	KAG	BKL	05/31/11

DRN	KAG	MAY 2011
DES	KAG	MAY 2011
CHK		MAY 2011
APP	BKL	MAY 2011

AECOM
4135 TECHNOLOGY PARKWAY
SHEBOYGAN, WI 53083-1883
T 920.458.8711 F 920.458.0537
WWW.AECOM.COM

COMPRESSED NATURAL GAS FUELING SYSTEMS
LINCOLN GARAGE & NORTHWEST GARAGE
MILWAUKEE, WISCONSIN

STRUCTURAL DETAILS

DATE MAY 2011

PROJECT NO 60198094

FILENAME 99-S-02.dwg
FILE NO

SHEET NO 61

DRAWING NO **99-S-02**

Xrefs: L:\work\60198094\000_CADD\00-General & 99-Standard Details\99-S-SDTL-01.dwg
L:\work\60198094\000_CADD\00-General & 99-Standard Details\f12234bd.dwg
Images:
Plotted By: hansmannb
Plot File Date Created: May/25/2011 7:29 PM
Layout-Sheet Name: LAYOUT
Filename: L:\WORK\60198094\000_CADD\00-GENERAL & 99-STANDARD DETAILS\99-S-02.DWG

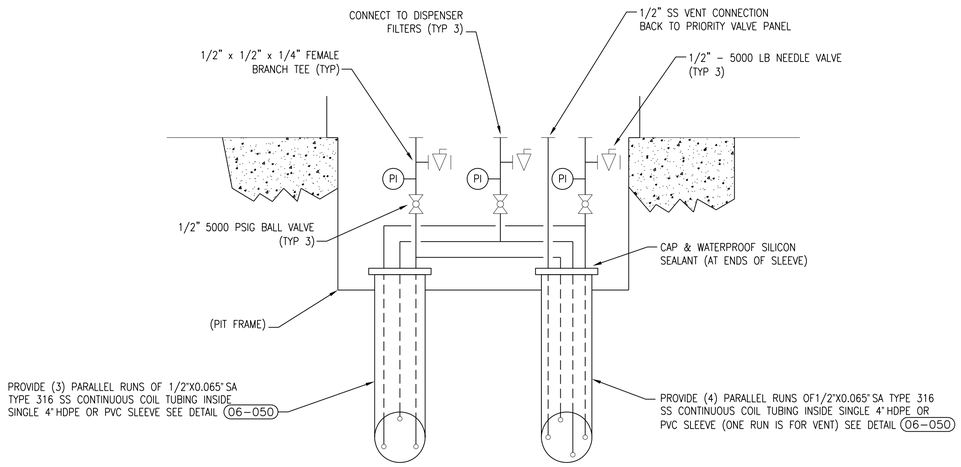

FAST FILL PIPING DETAIL — 06-011

NTS

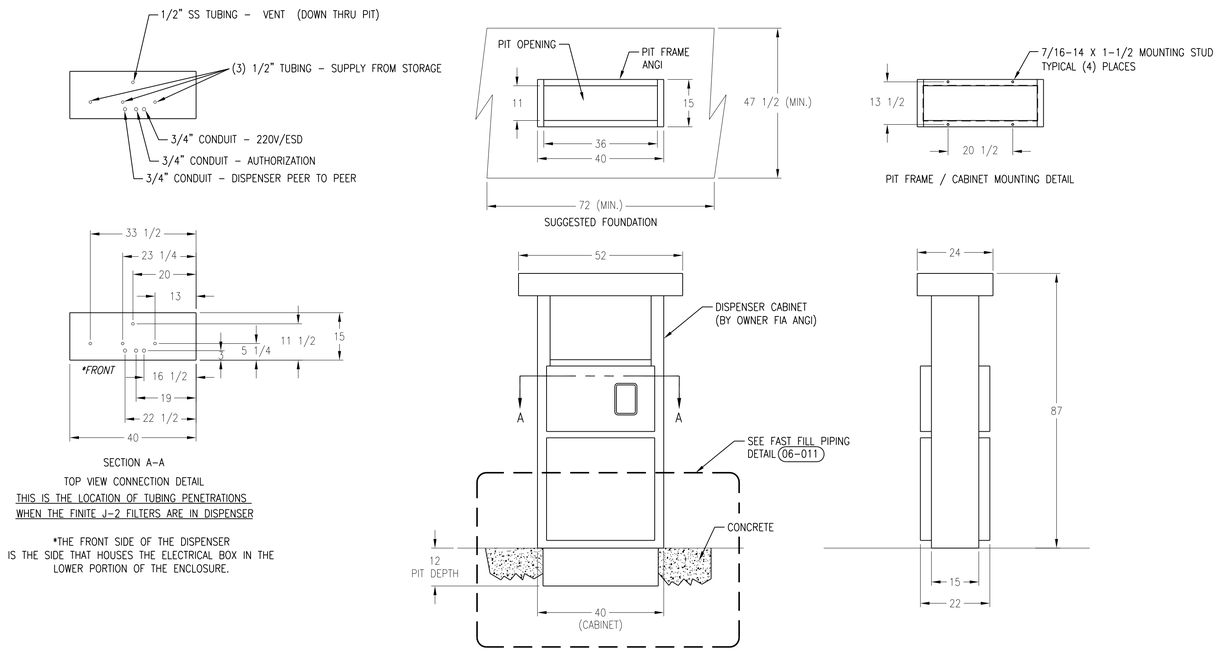

FAST FILL DISPENSER INSTALLATION DETAIL — 06-010

NTS

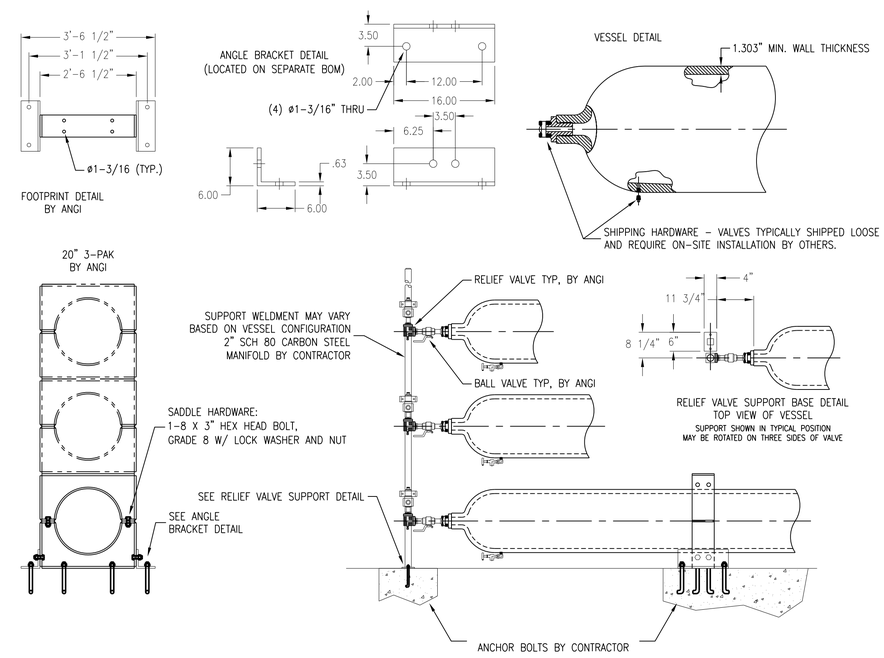

STORAGE CYLINDER ASSEMBLY INSTALLATION DETAIL — 06-020

NTS

NO	REVISIONS	BEH	BKL	05/31/11
A	ISSUED FOR BID	DRN	CHK	DATE

DRN	BEH	MAY 2011
DES	BKL	MAY 2011
CHK		MAY 2011
APP	BKL	MAY 2011

AECOM
4135 TECHNOLOGY PARKWAY
SHEBOYGAN, WI 53083-1883
T 920.458.8711 F 920.458.0537
WWW.AECOM.COM

COMPRESSED NATURAL GAS FUELING SYSTEMS
LINCOLN GARAGE & NORTHWEST GARAGE
MILWAUKEE, WISCONSIN

STRUCTURAL AND PROCESS STANDARD DETAILS

DATE	MAY 2011
PROJECT NO	60198094
FILENAME	99–SM–01.dwg
FILE NO	
SHEET NO	62
DRAWING NO	99-SM-01

Xrefs: E12234bd.dwg
Images:
Plotted By: hansmannb
Plot File Date Created: May/28/2011 5:06 PM
Layout–Sheet Name: LAYOUT1
Filename: L:\WORK\60198094\000_CADD\00–GENERAL & 99–STANDARD DETAILS\99–SM–01.DWG

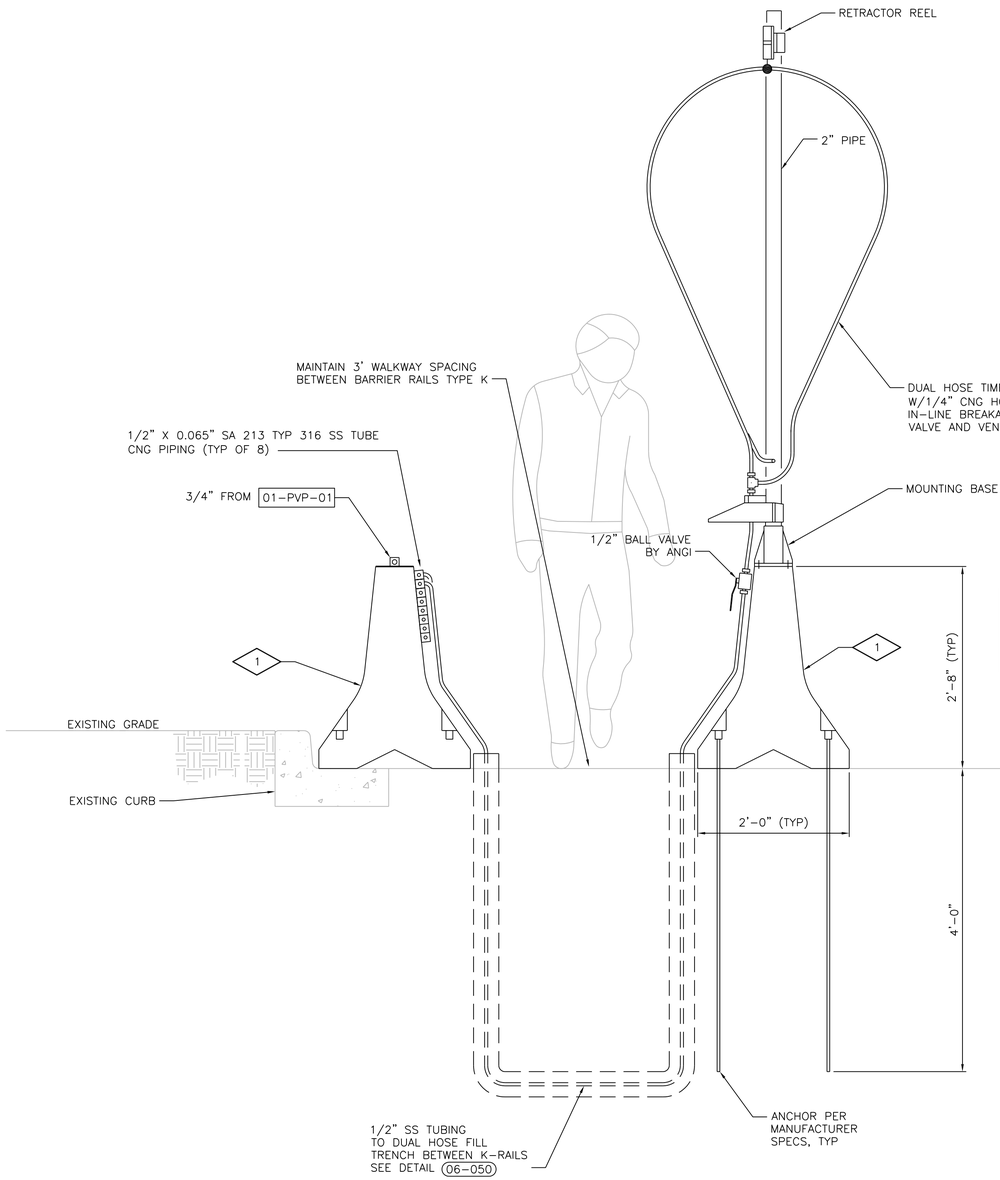

TIME-FILL RISER AND K-RAIL DETAIL (06-030)

0' 1' 2'
SCALE

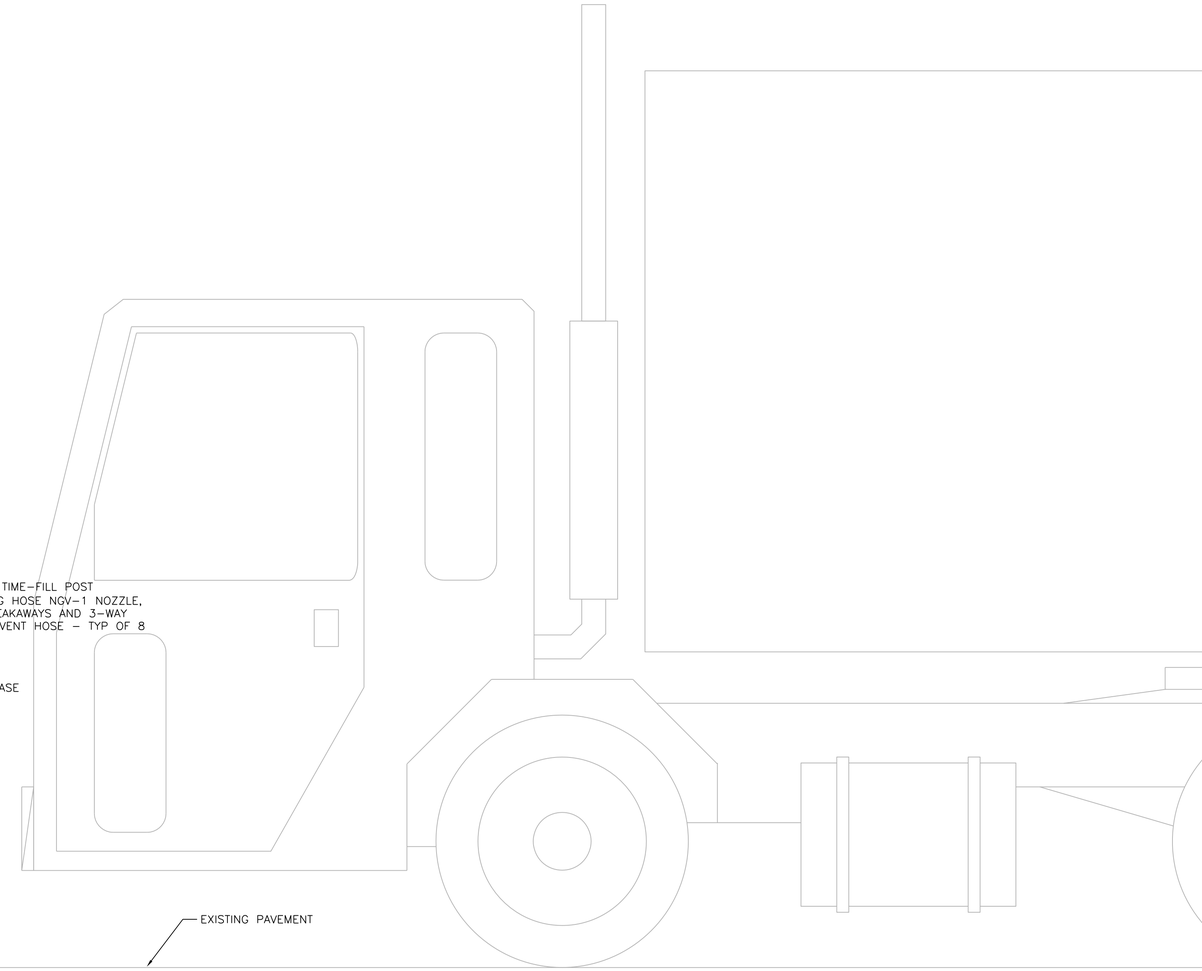

PLAN NOTES

1. BARRIER RAIL TYPE K, PRO-CAST PRODUCTS OR EQUAL. LAYING LENGTH AS NOTED ON DWG 01-S-03.

NO	REVISIONS	DATE
A	ISSUED FOR BID	05/31/11

BEH BKL
DRN CHK

DRN	BEH	MAY 2011
DES	BKL	MAY 2011
CHK		MAY 2011
APP	BKL	MAY 2011

AECOM
4135 TECHNOLOGY PARKWAY
SHEBOYGAN, WI 53083-1883
T 920.458.8711 F 920.458.0537
WWW.AECOM.COM

COMPRESSED NATURAL GAS FUELING SYSTEMS
LINCOLN GARAGE SITE
MILWAUKEE, WISCONSIN

STRUCTURAL AND PROCESS STANDARD DETAILS

DATE MAY 2011
PROJECT NO 60198094
FILENAME 99-SM-02.dwg
FILE NO
SHEET NO 63
DRAWING NO **99-SM-02**

Xrefs: L:\work\60198094\000_CADD\01-Lincoln Garage\E12234bd.dwg
Images:
Plotted By: hansmannb
Plot File Date Created: May/28/2011 10:57 AM
Layout-Sheet Name: LAYOUT1
Filename: L:\WORK\60198094\000_CADD\00-GENERAL & 99-STANDARD DETAILS\99-SM-02.DWG

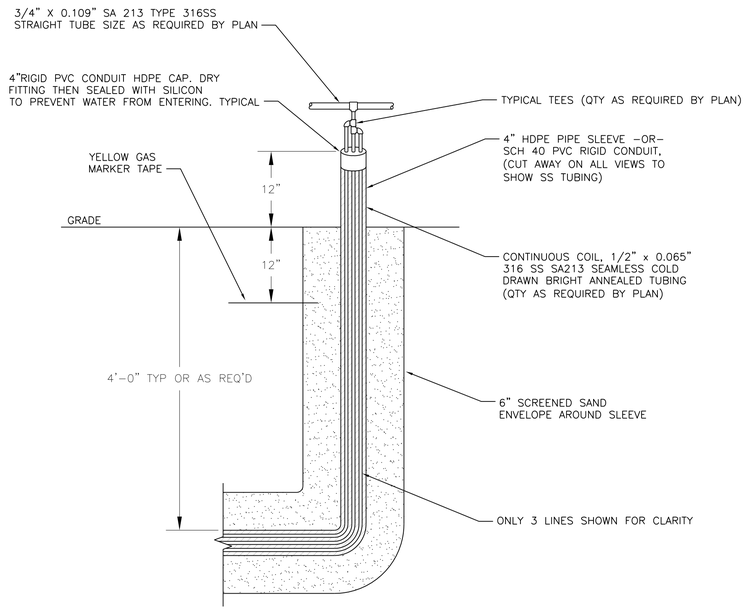

UNDERGROUND TUBING SLEEVE RISER DETAIL 06-050

NTS

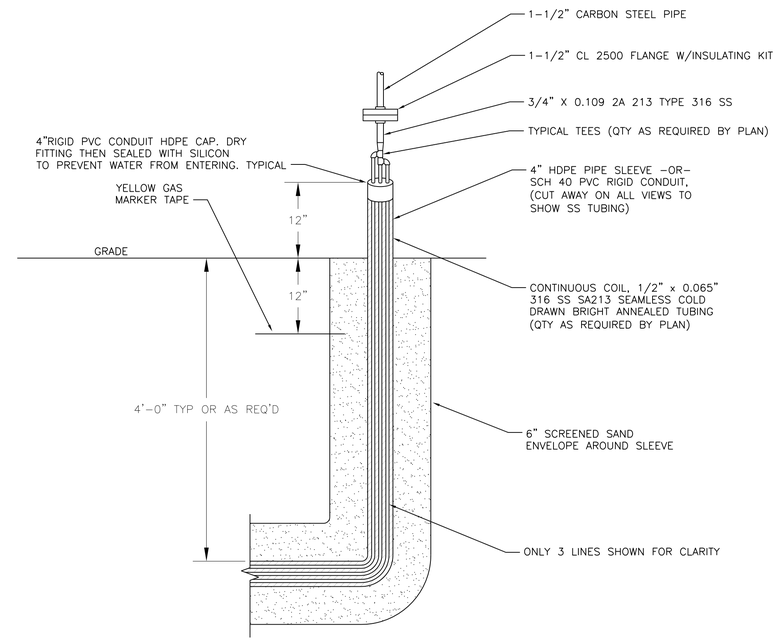

UNDERGROUD TUBING SLEEVE RISER DETAIL 06-051

NTS

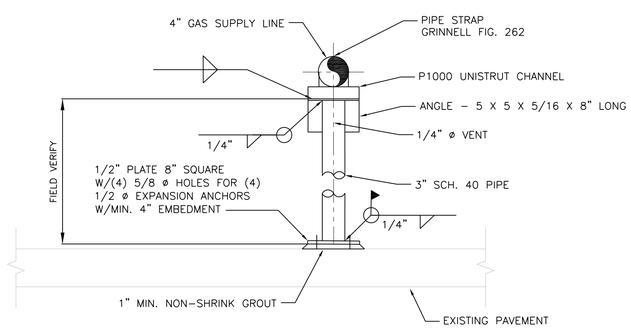

PIPE SUPPORT DETAIL 06-060

NTS

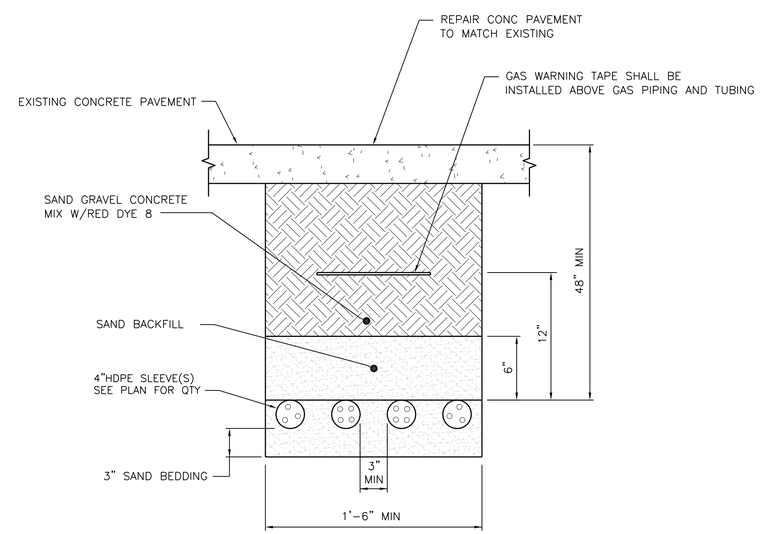

TRENCH DETAIL 06-070

NTS

NO	REVISIONS	DRN	CHK	DATE
A	ISSUED FOR BID	BEH	BKL	05/31/11

DRN	BEH	MAY 2011
DES	BKL	MAY 2011
CHK		MAY 2011
APP	BKL	MAY 2011

AECOM
4135 TECHNOLOGY PARKWAY
SHEBOYGAN, WI 53083-1883
T 920.458.8711 F 920.458.0537
WWW.AECOM.COM

COMPRESSED NATURAL GAS FUELING SYSTEMS
LINCOLN GARAGE & NORTHWEST GARAGE
MILWAUKEE, WISCONSIN

PROCESS
STANDARD DETAILS

DATE	MAY 2011
PROJECT NO	60198094
FILENAME	99-M-01.dwg
FILE NO	
SHEET NO	64
DRAWING NO	99-M-01

Xrefs: E12234bd.dwg
Images:
Plotted By: hansmannb
Plot File Date Created: May/28/2011 2:00 PM
Layout-Sheet Name: LAYOUT1
Filename: L:\WORK\60198094\000_CADD\00-GENERAL & 99-STANDARD DETAILS\99-M-01.DWG

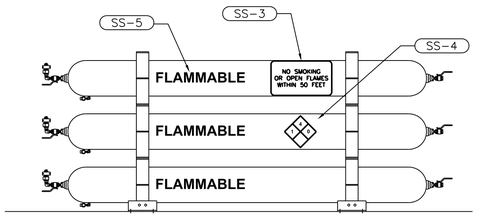

TYPICAL AT CNG ASME STORAGE VESSELS (VERTICAL CONFIGURATION)

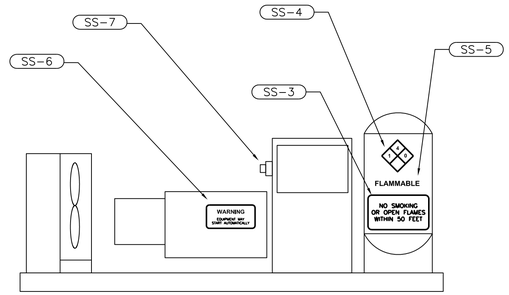

TYPICAL AT COMPRESSOR SKID

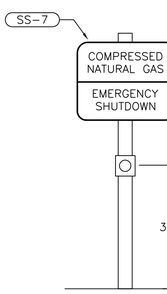

TYPICAL AT EMERGENCY SHUTDOWN DEVICE

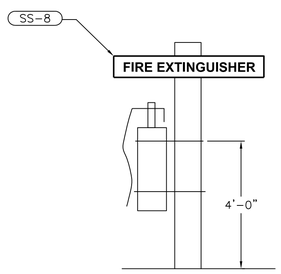

TYPICAL AT FIRE EXTINGUISHERS

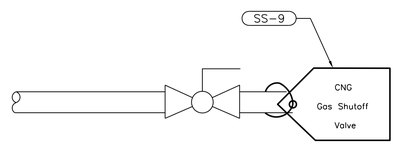

TYPICAL AT METER SET ASSEMBLY

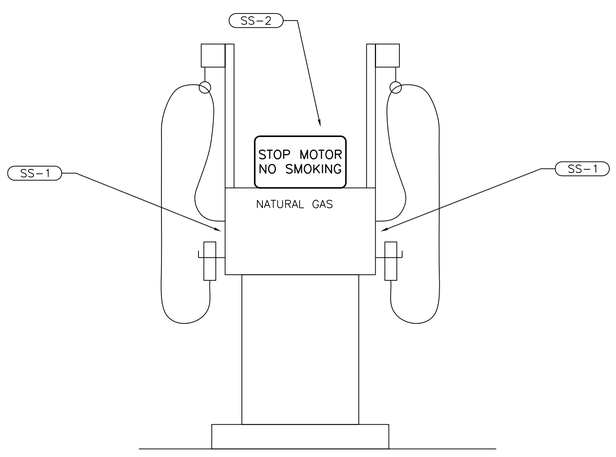

TYPICAL AT DUAL FAST-FILL DISPENSER

SIGN TAG	SYMBOL	SIGN SPECIFICATIONS
SS-1	EMERGENCY SHUTOFF	SIGN NEEDED: EMERGENCY SHUTOFF MATERIAL: RED BACKGROUND WITH WHITE LETTERING 4" X 6" LOCATION: MOUNTED AT SHUTOFF VALVE STEM ON THE SIDE OF DISPENSER, TYPICAL ON BOTH SIDES
SS-2	STOP MOTOR NO SMOKING	SIGN NEEDED: STOP MOTOR; NO SMOKING (TYP BOTH SIDES) MATERIAL: 20" X 10" X .08" THK ALUMINUM SHEET, ROUNDED CORNERS FASTENED WITH ADHESIVE OR STRAPS. 3" HIGH RED LETTERS W/ WHITE BACKGROUND LOCATION: NEW FUELING ISLAND (SEE NOTE 3)
SS-3	NO SMOKING OR OPEN FLAMES WITHIN 50 FEET	SIGN NEEDED: NO SMOKING OR OPEN FLAMES WITHIN 50 FEET MATERIAL: 12" X 8" X .08" THK ALUMINUM SHEET, ROUNDED CORNERS FASTENED W/SCREWS OR STRAPS. 1.5" HIGH RED LETTERS W/ WHITE BACKGROUND LOCATION: AT PRESSURE VESSELS
SS-4	4 1 0	SIGN NEEDED: NFPA HAZARD PLACARD MATERIAL: 15" X 15" X .08" THK ALUMINUM SHEET, 3" HIGH NUMERALS LOCATION: ALONG SIDE OF CNG PRESSURE VESSELS
SS-5	FLAMMABLE	SIGN NEEDED: FLAMMABLE MATERIAL: 4" HIGH RED LETTERS PAINTED OR STENCILED LOCATION: ON SURFACE OF PRESSURE VESSELS
SS-6	WARNING EQUIPMENT MAY START AUTOMATICALLY	SIGN NEEDED: WARNING EQUIPMENT MAY START AUTOMATICALLY AT ANY TIME MATERIAL: 12" X 3" X .08" THK ALUMINUM SHEET, ROUNDED CORNERS FASTENED W/SCREWS OR STRAPS. BACKGROUND IS YELLOW W/1" BLACK LETTERING LOCATION: MOUNTED ON RECIPROCATING LONG PUMPS SKIDS, SIDE FACING APPROACHING PERSONNEL, 3' FROM GRADE
SS-7	COMPRESSED NATURAL GAS EMERGENCY SHUTDOWN	SIGN NEEDED: COMPRESSED NATURAL GAS EMERGENCY SHUTDOWN MATERIAL: 12" X 12" X .08" THK ALUMINUM SHEET, ROUNDED CORNERS FASTENED W/SCREWS OR STRAPS. BACKGROUND IS WHITE/RED W/2.5" RED/WHITE LETTERING LOCATION: MOUNTED ON EMERGENCY SHUTDOWN BUTTONS (ESD)
SS-8	FIRE EXTINGUISHER FIRE EXTINGUISHER SEE NOTE	SIGN NEEDED: FIRE EXTINGUISHER MATERIAL: 12" X 3" X .08" THK ALUMINUM SHEET, ROUNDED CORNERS FASTENED W/SCREWS OR STRAPS. BACKGROUND IS RED W/2" WHITE LETTERING LOCATION: MOUNTED ON FIRE EXTINGUISHER NOTE: USE IF FIRE EXTINGUISHER IS NOT IMMEDIATELY VISIBLE
SS-9	CNG Gas Shutoff Valve	SIGN TEXT: CNG GAS SHUTOFF VALVE MATERIAL: METAL TAG WITH RED BACKGROUND AND 1" WHITE LETTERING LOCATION: TIED TO BODY OF BLOCK VALVE IMMEDIATELY DOWNSTREAM OF METER SET ASSEMBLY-(MSA)
SS-10	IN CASE OF LEAK OR RELEASE 1. Use Emergency Shutdown Button 2. Report the accident Fire Department Telephone No. (XXX) XXX-XXXX XXXX XXXX XXXX Milwaukee, Wi	SIGN NEEDED: IN CASE OF LEAK OR RELEASE ..... MATERIAL: 18" X 12" X .08" THK ALUMINUM SHEET, ROUNDED CORNERS, REFLECTORIZED MATERIAL LOCATION: ON EXTERIOR WALL OF CNG COMPRESSOR ENCLOSURE AND AT EACH DISPENSER ISLAND

NOTES

1. SIGNS SHALL BE VISIBLE AND CONSPICUOUS SO THEY IMMEDIATELY COME INTO VIEW TO PERSONNEL APPROACHING THE EQUIPMENT AND THAT THE MESSAGE IS APPARENT FROM ANY VANTAGE POINT WITHIN THE SURROUNDING AREA.
2. DEPICTION OF EQUIPMENT AND COMPONENTS SHOWN ON THIS DRAWING ARE FOR SCHEMATIC PURPOSES ONLY AND MAY DIFFER FROM THE ACTUAL COMPONENTS THEY REPRESENT.
3. SIGNS TO BE MOUNTED ON SIDE FACING APPROACHING PERSONNEL, 4 FEET (MIN) FROM GRADE.
4. CONTRACTOR TO INSTALL 20LB 20-A:120-B:C FIRE EXTINGUISHERS MOUNTED 4 FEET ABOVE GRADE.
5. ALL SIGNS AND LETTERING SHALL BE CONSTRUCTED OF UV RESISTANT, EXTERIOR-GRADE MATERIALS.
6. PROVIDE ID TAGS FOR ALL INLET AND OUTLET VALVES SUPPLYING AND BETWEEN PACKAGED EQUIPMENT, INCLUDING MANUAL, AUTOMATIC AND RELIEF VALVES, AND SUPPLY VALVES FOR TIME-FILL AND FAST-FILL SYSTEMS.

NO	REVISIONS	DRN CHK	DATE

DRN	BEH	MAY 2011
DES	BKL	MAY 2011
CHK		MAY 2011
APP	BKL	MAY 2011

AECOM
4135 TECHNOLOGY PARKWAY
SHEBOYGAN, WI 53083-1883
T 920.458.8711 F 920.458.0537
WWW.AECOM.COM

COMPRESSED NATURAL GAS FUELING SYSTEMS
LINCOLN GARAGE & NORTHWEST GARAGE
MILWAUKEE, WISCONSIN

PROCESS
SAFETY SIGN DETALS

DATE	MAY 2011
PROJECT NO	60198094
FILENAME FILE NO	99-M-02.dwg
SHEET NO	65
DRAWING NO	99-M-02

Xrefs: L:\work\60198094\000_CADD\00-General & 99-Standard Details\Ef2234bd.dwg
Images: L:\work\60198094\000_CADD\00-General & 99-Standard Details\Safety Sign Details.tif
Plotted By: klingbeild
Plot File Date Created: May/27/2011 4:01 PM
Layout-Sheet Name: LAYOUT1
Filename: L:\WORK\60198094\000_CADD\00-GENERAL & 99-STANDARD DETAILS\99-M-02.DWG

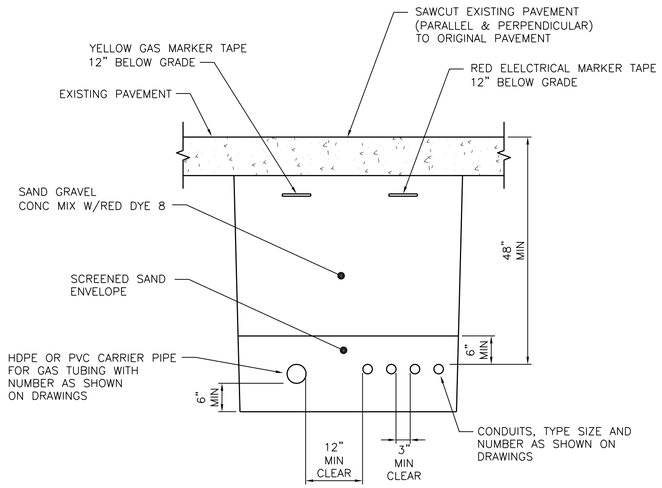

TYPICAL DETAIL FOR GAS PIPING/ELECTRICAL CONDUIT SIDE-BY-SIDE (10-450)

NTS

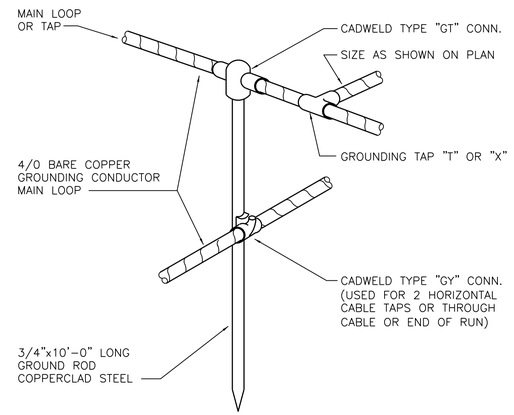

CONDUCTOR TO GROUND ROD CONNECTION DETAIL (10-451)

NTS

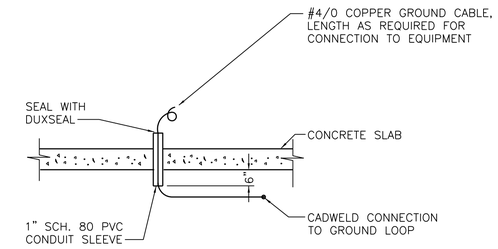

EQUIPMENT GROUND CABLE STUB-UP (10-452)

NTS

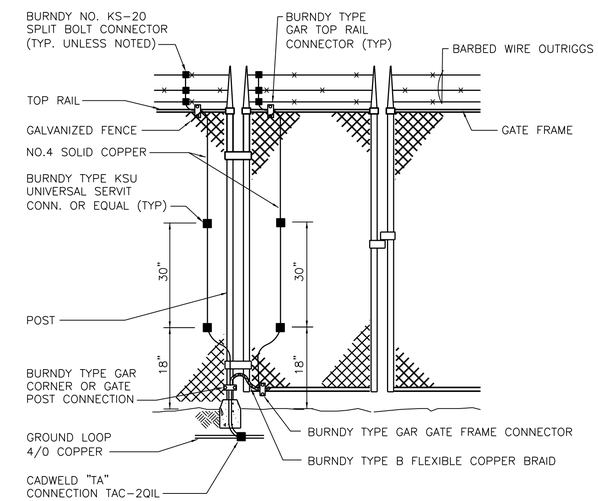

GATE AND HINGE POST GROUNDING (10-457)

NTS

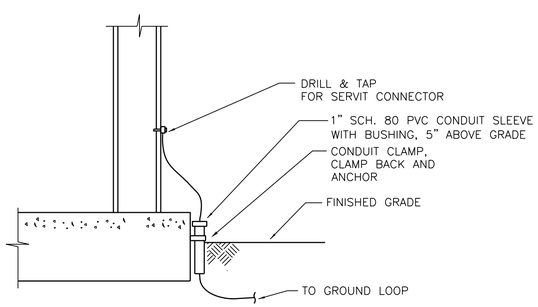

STEEL OR METAL STRUCTURE GROUND CONNECTION (10-453)

NTS

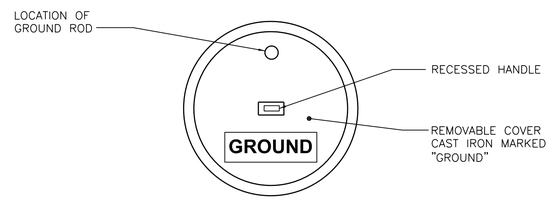

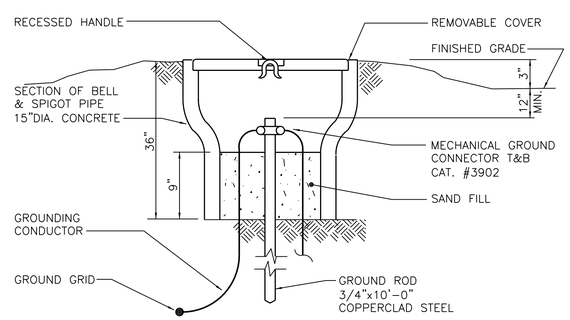

GROUNDING TEST STATION DETAIL (10-455)

NTS

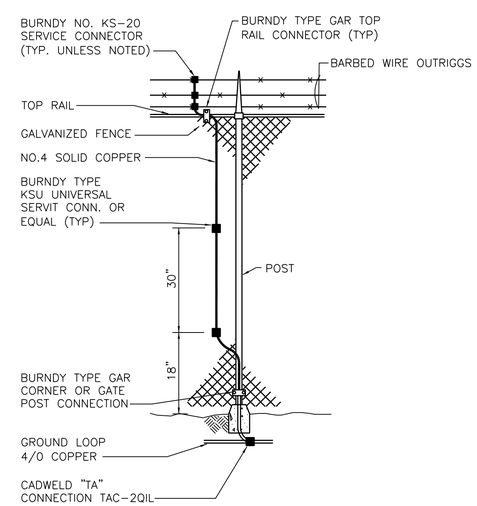

LINE POST GROUNDING (10-458)

NTS

NO	REVISIONS	DRN	CHK	DATE
A	ISSUED FOR BID	DMK	BKL	05/31/11

DRN	DMK	MAY 2011
DES	DMK	MAY 2011
CHK	EDM	MAY 2011
APP	BKL	MAY 2011

AECOM
4135 TECHNOLOGY PARKWAY
SHEBOYGAN, WI 53083-1883
T 920.458.8711 F 920.458.0537
WWW.AECOM.COM

COMPRESSED NATURAL GAS FUELING SYSTEMS
LINCOLN GARAGE & NORTHWEST GARAGE
MILWAUKEE, WISCONSIN

ELECTRICAL DETAILS

DATE	MAY 2011
PROJECT NO	60198094
FILENAME	99-E-01.dwg
FILE NO	
SHEET NO	66
DRAWING NO	99-E-01

Xrefs: E12234bd.dwg
Images:
Plotted By: hansmannb
Plot File Date Created: May/28/2011 4:02 PM
Layout-Sheet Name: LAYOUT
Filename: L:\WORK\60198094\000_CADD\00-GENERAL & 99-STANDARD DETAILS\99-E-01.DWG

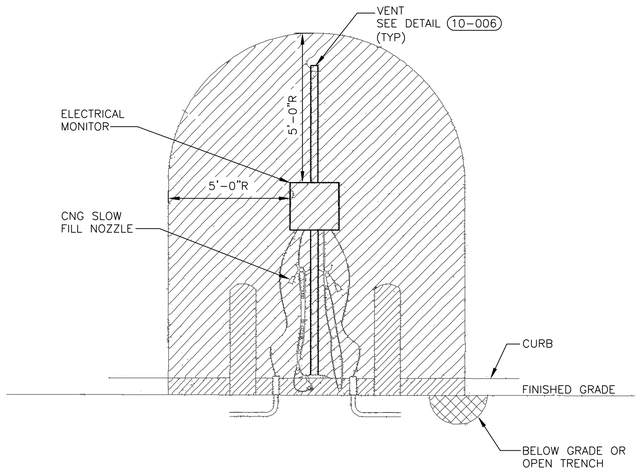

AREA CLASSIFICATION CNG SLOW FILL STATION DETAIL (10-001)

NTS

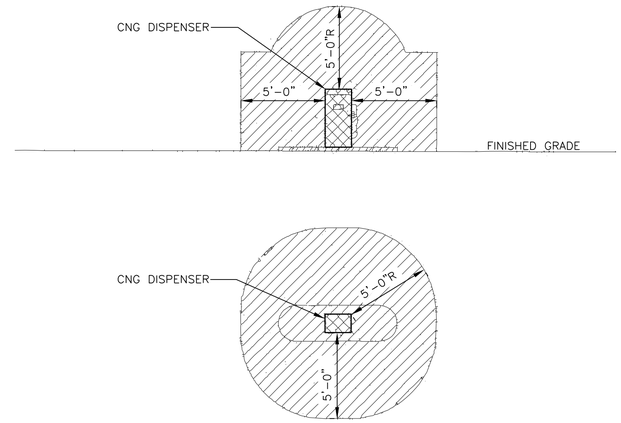

AREA CLASSIFICATION CNG DISPENSER DETAIL (10-002)

NTS

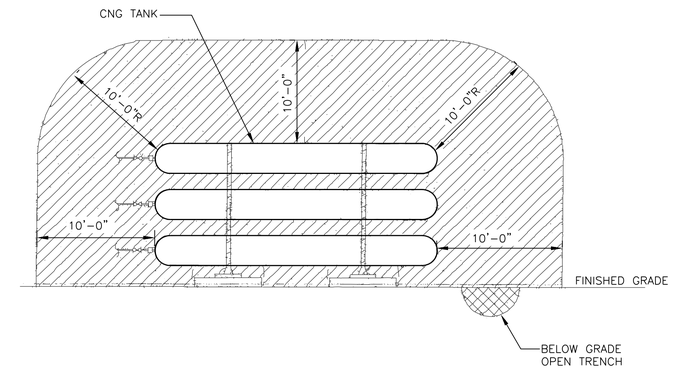

AREA CLASSIFICATION CNG TANKS DETAIL (10-003)

NTS

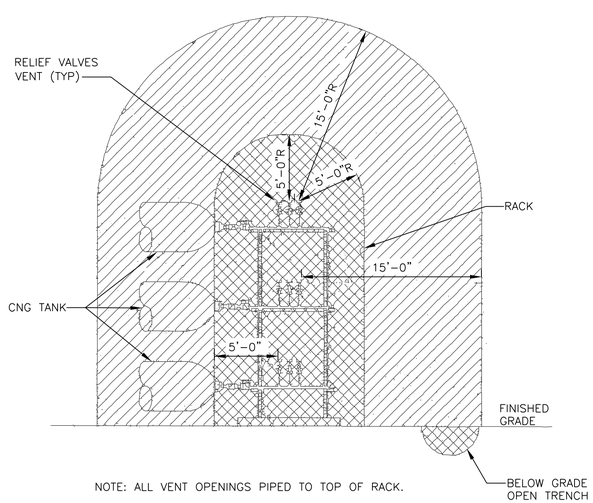

NOTE: ALL VENT OPENINGS PIPED TO TOP OF RACK.

AREA CLASSIFICATION CNG RELIEF VALVES DETAIL (10-004)

NTS

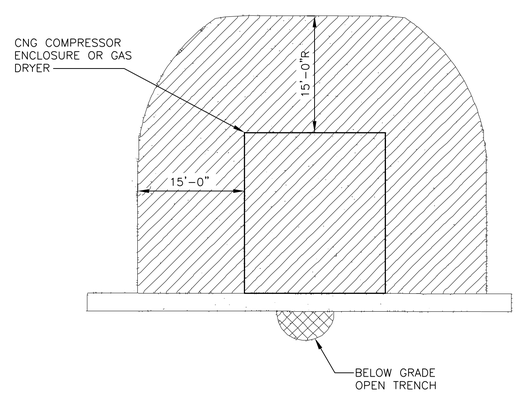

AREA CLASSIFICATION CNG COMPRESSOR AND GAS DRYER DETAIL (10-005)

NTS

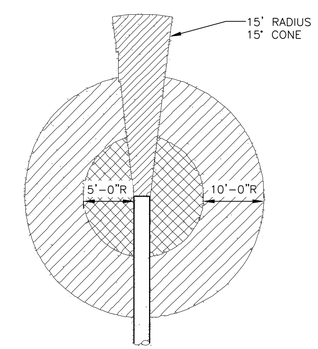

AREA CLASSIFICATION TYPICAL CNG VENT DETAIL (10-006)

NTS

LEGEND

- CLASS I, DIVISION 2, GROUP D
- CLASS I, DIVISION 1, GROUP D
- UNCLASSIFIED

NO	REVISIONS	DRN	CHK	DATE
A	ISSUED FOR BID	DMK	BKL	05/31/11

DRN	DMK	MAY 2011
DES	DMK	MAY 2011
CHK	EDM	MAY 2011
APP	BKL	MAY 2011

AECOM
4135 TECHNOLOGY PARKWAY
SHEBOYGAN, WI 53083-1883
T 920.458.8711 F 920.458.0537
WWW.AECOM.COM

COMPRESSED NATURAL GAS FUELING SYSTEMS
LINCOLN GARAGE & NORTHWEST GARAGE
MILWAUKEE, WISCONSIN

ELECTRICAL DETAILS

DATE	MAY 2011
PROJECT NO	60198094
FILENAME	99-E-02.dwg
FILE NO	
SHEET NO	67
DRAWING NO	99-E-02

Xrefs: E12234bd.dwg
Images:
Plotted By: hansmannb
Plot File Date Created: May/25/2011 5:16 PM
Layout-Sheet Name: LAYOUT
Filename: L:\WORK\60198094\000_CADD\00-GENERAL & 99-STANDARD DETAILS\99-E-02.DWG