APPENDIX E

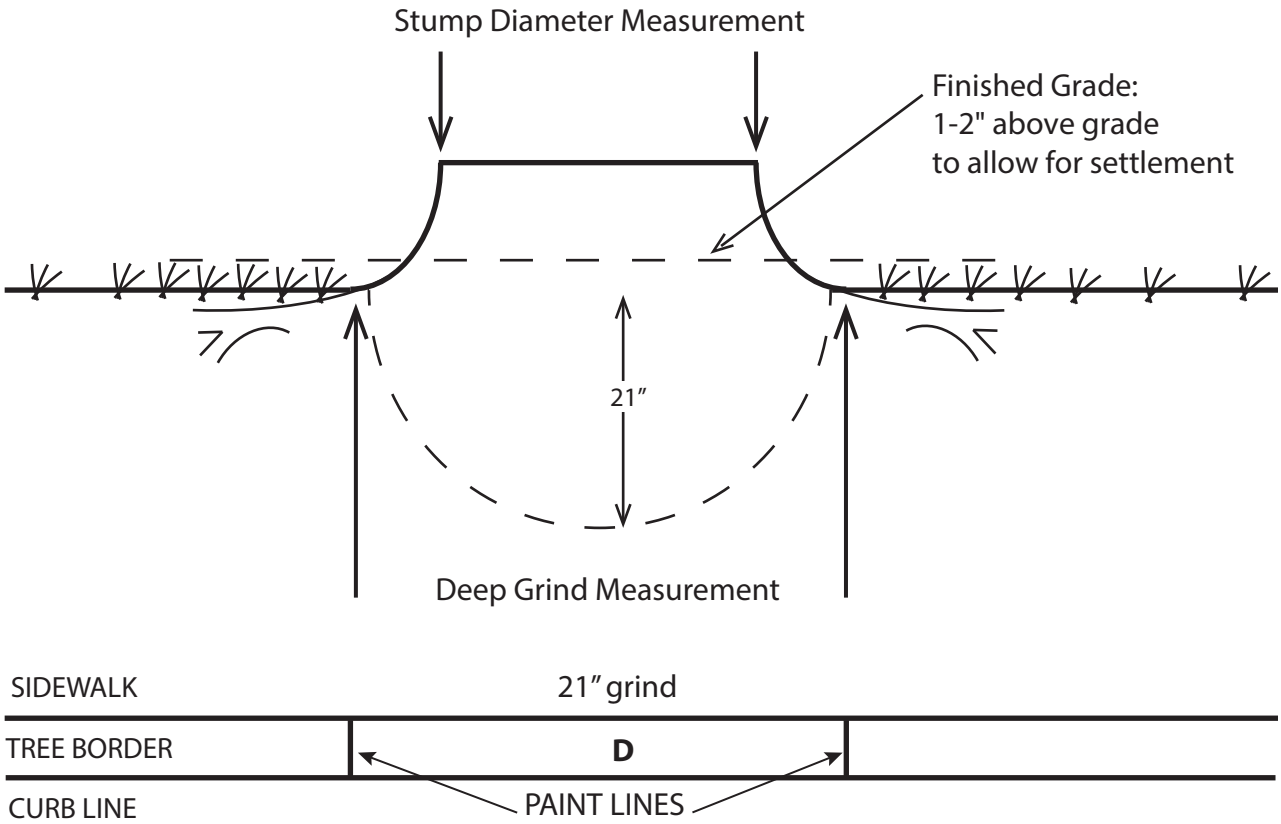
Stump Diameter Measurement
Finished Grade:
1-2" above grade
to allow for settlement
21″
Deep Grind Measurement
SIDEWALK
21″ grind
TREE BORDER
D
CURB LINE
PAINT LINES

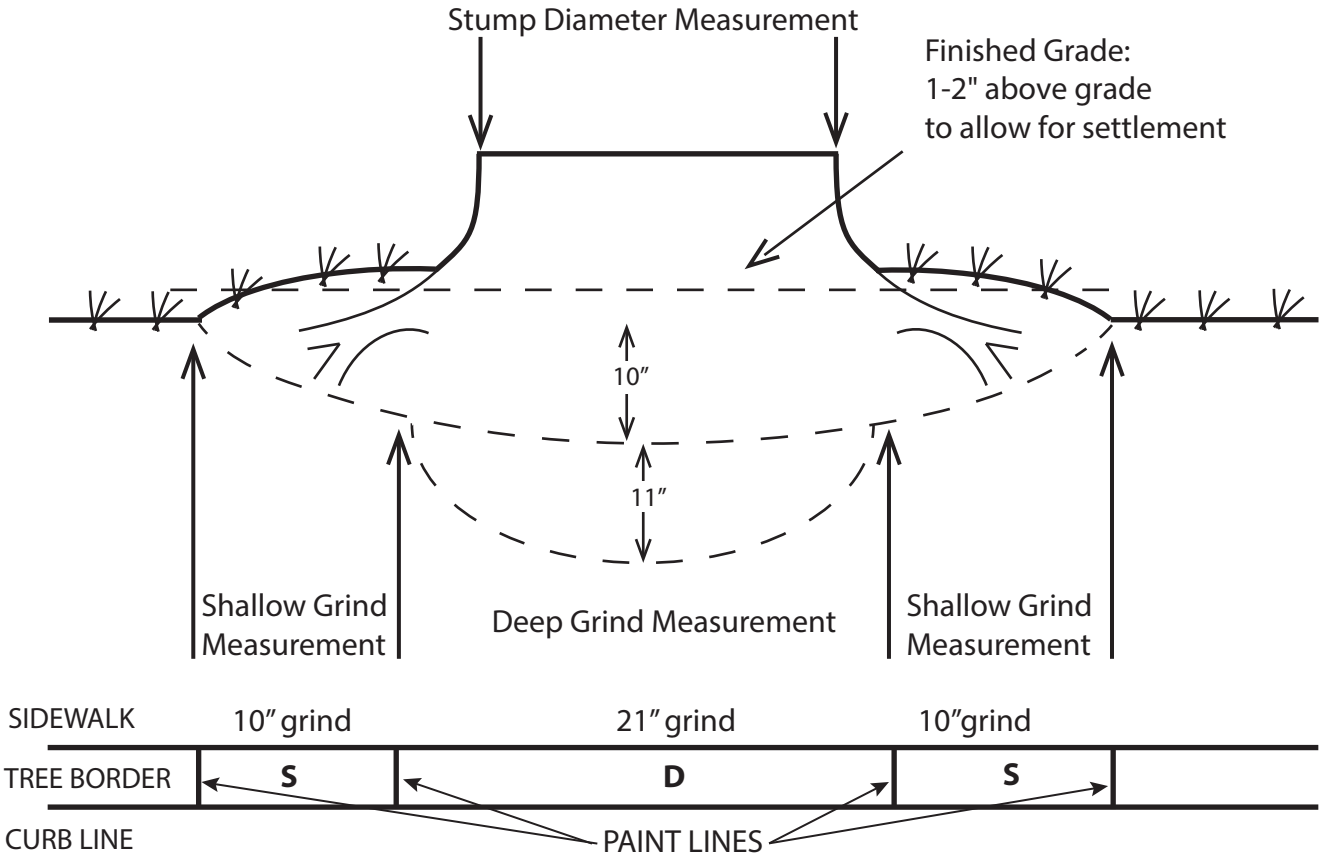
Stump Diameter Measurement
Finished Grade:
1-2" above grade
to allow for settlement
10″
11″
Shallow Grind
Measurement
Deep Grind Measurement
Shallow Grind
Measurement
SIDEWALK
10″ grind
21″ grind
10″grind
TREE BORDER
S
D
S
CURB LINE
PAINT LINES