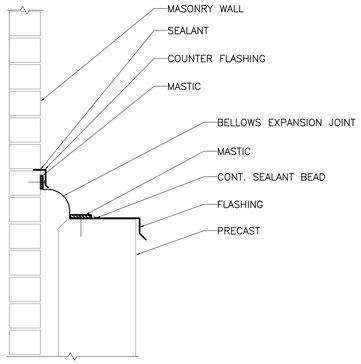

1 TYPICAL EXPANSION JOINT DETAIL AT MASONRY WALL

1 1/2" = 1'-0"

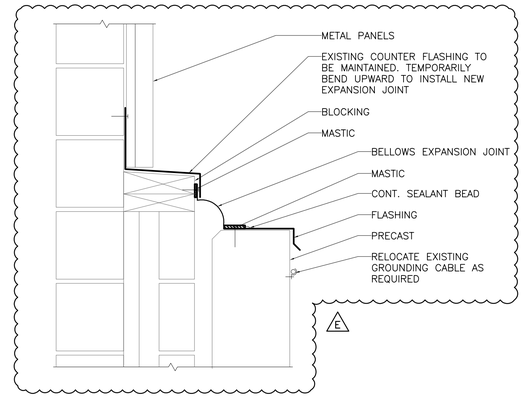

2 TYPICAL EXPANSION JOINT DETAIL AT METAL PANELS

1 1/2" = 1'-0"

NOTES: DETAILS 1 AND 2

1. ONLY TYPICAL EXPANSION JOINT DETAILS ARE SHOWN. EXPANSION JOINT MANUFACTURER/INSTALLER TO DEVELOP ADDITIONAL DETAILS FOR CORNER, END, DOOR, LIGHT POLE, LOUVER, AND ANY OTHER SPECIAL CONDITIONS AS PART OF SHOP SUBMITTAL.
2. ACTUAL CONDITIONS AND DIMENSIONS NEED TO BE VERIFIED IN FIELD.
3. SUBMIT SHOP DRAWINGS FOR APPROVAL SHOWING TYPICAL AND SPECIAL CONDITIONS.
4. IN METAL PANEL DETAIL, EXISTING STAINLESS STEEL COUNTER FLASHING IS TO BE MAINTAINED. NEW EXPANSION JOINT SHALL BE INSTALLED UNDER EXISTING COUNTER FLASHING.
5. RELOCATE EXISTING GROUNDING CABLE CURRENTLY LOCATED ON TOP OF PRECAST AS REQUIRED.

E

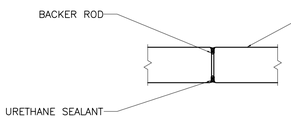

NOTE:

REPLACE ALL SPANDREL BEAM, COLUMN, AND CENTER WALL SEALANT JOINTS ON THE EXPOSED UPPER LEVEL.

E

3 PRECAST EXPANSION JOINT DETAIL

1 1/2" = 1'-0"

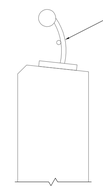

4 SECTION

1 1/2" = 1'-0"

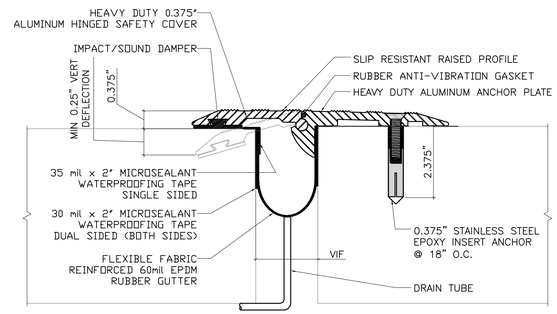

5 TYPICAL EXPANSION JOINT AT DOORWAY

NTS

NOTE: THE SAME DETAIL MAY BE USED ON THE TWO SHORT WALLS ADJACENT TO THE DOORWAY, OR AN ALTERNATE DETAIL USING A SIMPLER PROTECTIVE PLATE MAY BE PROPOSED.

E

NOTE:

1. CONCRETE REHABILITATION OF EXISTING SPALLS AND CRACKS ON THE UPPER LEVEL CONSISTS OF SPALLS AND CRACKS IN FACE OR TOP OF SPANDREL BEAMS, COLUMNS, AND CENTER WALL. APPROXIMATE QUANTITIES AS FOLLOWS. SPALL REPAIR 25 SQFT. EPOXY CRACK INJECTION 20 LF. ANY SPALLS OR CRACKS CAUSED BY CONSTRUCTION SHALL ALSO BE REHABILITATED.
2. PAINTING OF STEEL ON EXPOSED UPPER LEVEL SHALL INCLUDE GUARDRAIL ON TOP OF CONCRETE, SNOW CHUTE, TRAFFIC PROTECTION AROUND PIPES AND CONDUITS, DOORWAY HANDRAILS.

exp.

exp U.S. Services Inc.
t: +1.312.616.0000 | f: +1.312.616.6069
205 N. Michigan Ave.
Suite 3600
Chicago, IL 60601
U.S.A.

NO.	DATE	DESCRIPTION
E	9-10-15	ADDENDUM #2
D	7-30-15	BID SET
C	6-15-15	FINAL SET
B	1-14-15	PRE-FINAL SET
A	7-28-14	PROGRESS SET

RECORD

THIRD DISTRICT POLICE STATION PARKING STRUCTURE

2333 N. 49TH STREET
MILWAUKEE, WISCONSIN 53210

CITY OF MILWAUKEE
DEPT. OF PUBLIC WORKS

STRUCTURAL DETAILS (2 OF 2)

Scale: AS SHOWN

Drawn By: DPL

Project No: CHI-000213561-A0

Sheet Number: S-502