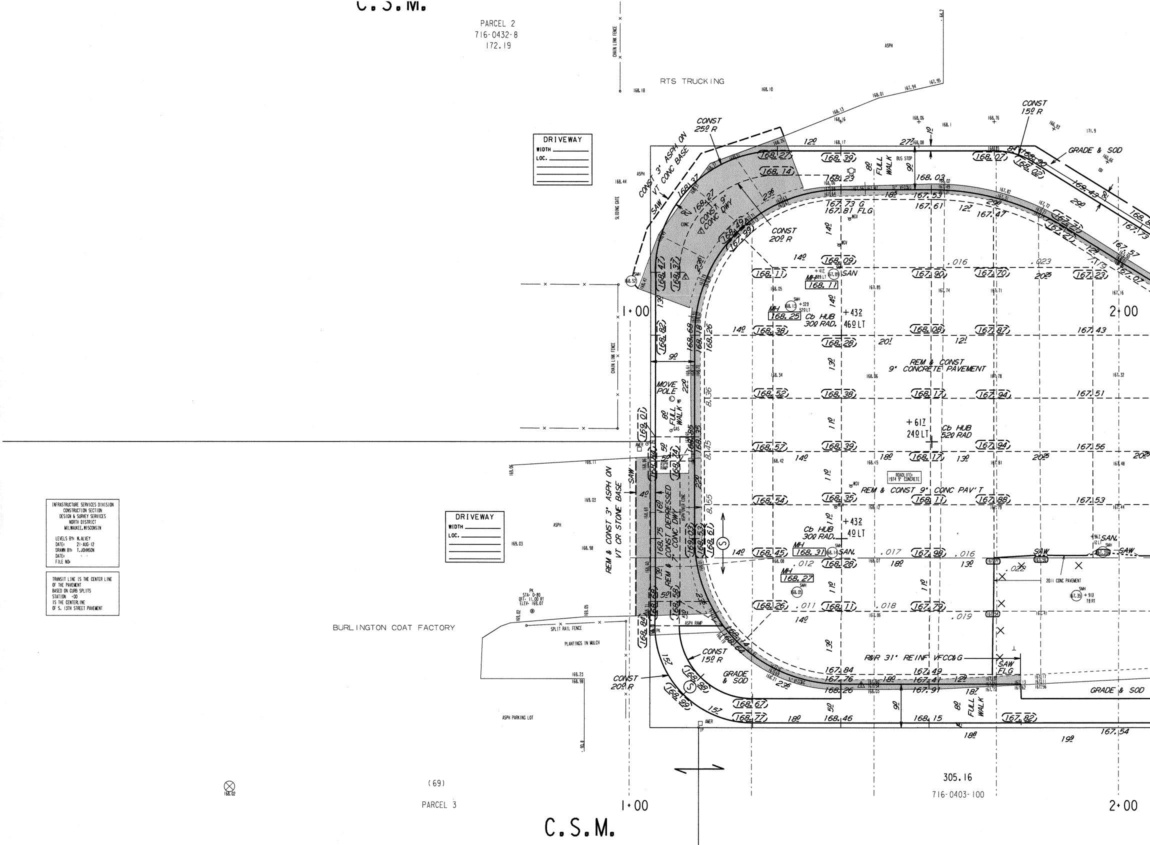
C.S.M.
PARCEL 2
716-0432-8
172.19
RTS TRUCKING
ASPH
CHAIN LINK FENCE
SLIDING GATE
DRIVEWAY
WIDTH
LOC.
CONST 25' R
CONST 3" ASPH ON VT CONC BASE
SAW
CONST 9" CONC DWY
CONST 20' R
CONST 15' R
GRADE & SOD
BUS STOP
FULL WALK
31" VFCC&G
167.73 G
167.81 FLG
MH 168.11 SAN
MH 168.25 Cb HUB 30' RAD.
+43.2 46.0 LT
REM & CONST 9" CONCRETE PAVEMENT
+61.7 24.0 LT
Cb HUB 52' RAD
MOVE POLE
FULL WALK
GAS
ASPH RAMP
ROADLIFE: 1974 9" CONCRETE
REM & CONST 9" CONC PAV'T
Cb HUB 30' RAD.
+43.2 40 LT
MH 168.31 SAN.
MH 168.27
SAN.
2011 CONC PAVEMENT
REM & CONST 3" ASPH ON VT OR STONE BASE
REM & CONST 7" CONC DEPRESSED CONC DWY
R&R 31" REINF VFCC&G
SAW FLG
GRADE & SOD
AMER
PK STA. 0-80 OFF. 11.00 RT ELEV. 169.07
SPLIT RAIL FENCE
PLANTINGS IN MULCH
BURLINGTON COAT FACTORY
ASPH PARKING LOT
1+00
2+00
305.16
716-0403-100
(69)
PARCEL 3
C.S.M.

INFRASTRUCTURE SERVICES DIVISION
CONSTRUCTION SECTION
DESIGN & SURVEY SERVICES
NORTH DISTRICT
MILWAUKEE, WISCONSIN

LEVELS BY: W.ALVEY
DATE: 21-AUG-12
DRAWN BY: T.JOHNSON
DATE: - -
FILE NO:

TRANSIT LINE IS THE CENTER LINE
OF THE PAVEMENT
BASED ON CURB SPLITS
STATION +00
IS THE CENTERLINE
OF S. 13TH STREET PAVEMENT

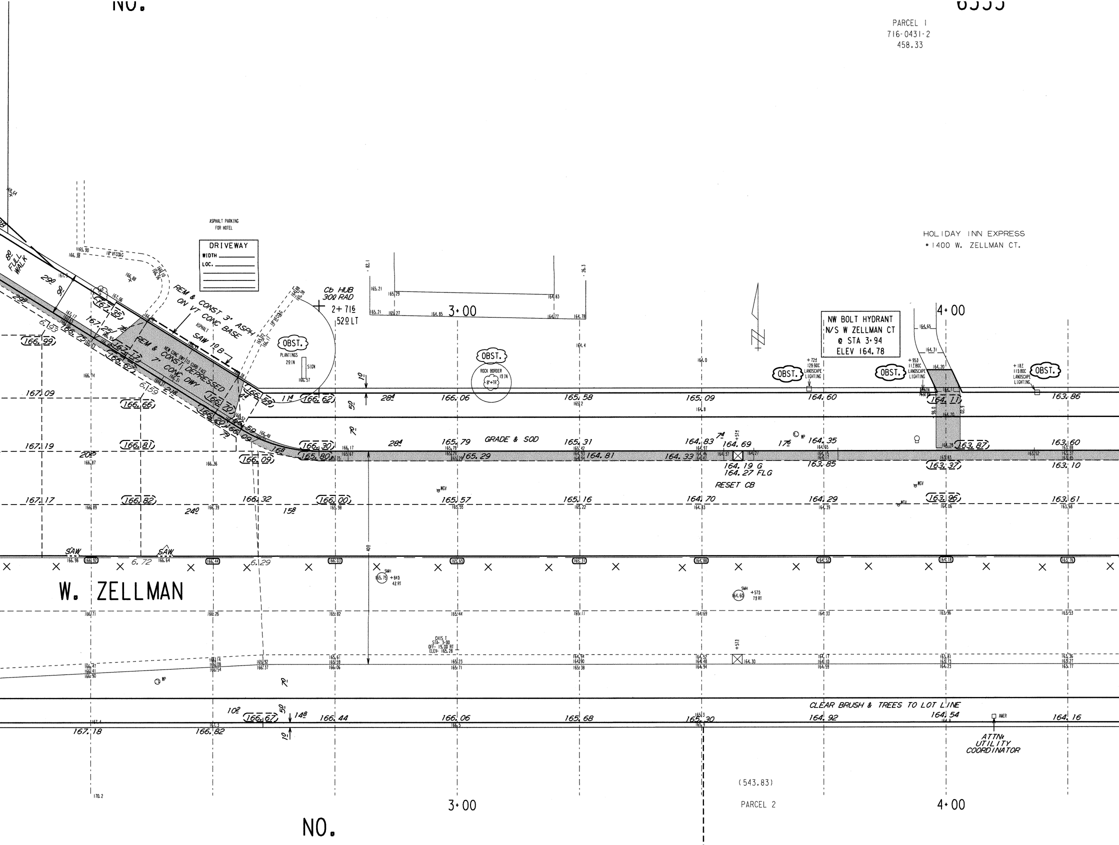
NO.
6555
PARCEL 1
716-0431-2
458.33
ASPHALT PARKING FOR HOTEL
DRIVEWAY
WIDTH
LOC.
HOLIDAY INN EXPRESS
• 1400 W. ZELLMAN CT.
8' FULL WALK
REM & CONST 3" ASPH ON VT CONC BASE
SAW
REM & CONST DEPRESSED 7" CONC DWY
NEW CONC DWY TO CURB FACE
Cb HUB
30' RAD
2+71.6
52.0 LT
OBST.
PLANTINGS
SIGN
ROCK BORDER
3+00
4+00
NW BOLT HYDRANT
N/S W ZELLMAN CT
@ STA 3+94
ELEV 164.78
LANDSCAPE LIGHTING
GRADE & SOD
164.19 G
164.27 FLG
RESET CB
W. ZELLMAN
SMH
CHIS T
STA 3+00
OFF 19.00 RT
ELEV 165.28
CLEAR BRUSH & TREES TO LOT LINE
ATTN: UTILITY COORDINATOR
AMER
(543.83)
PARCEL 2
167.09
167.19
167.17
166.99
166.81
166.82
166.66
166.62
166.06
165.58
165.09
164.60
163.86
166.30
165.80
165.79
165.29
165.31
164.81
164.83
164.33
164.69
164.35
163.85
163.87
163.37
163.60
163.10
166.32
166.00
165.57
165.16
164.70
164.29
163.96
163.61
167.18
166.82
166.67
166.44
166.06
165.68
165.30
164.92
164.54
164.16
NO.

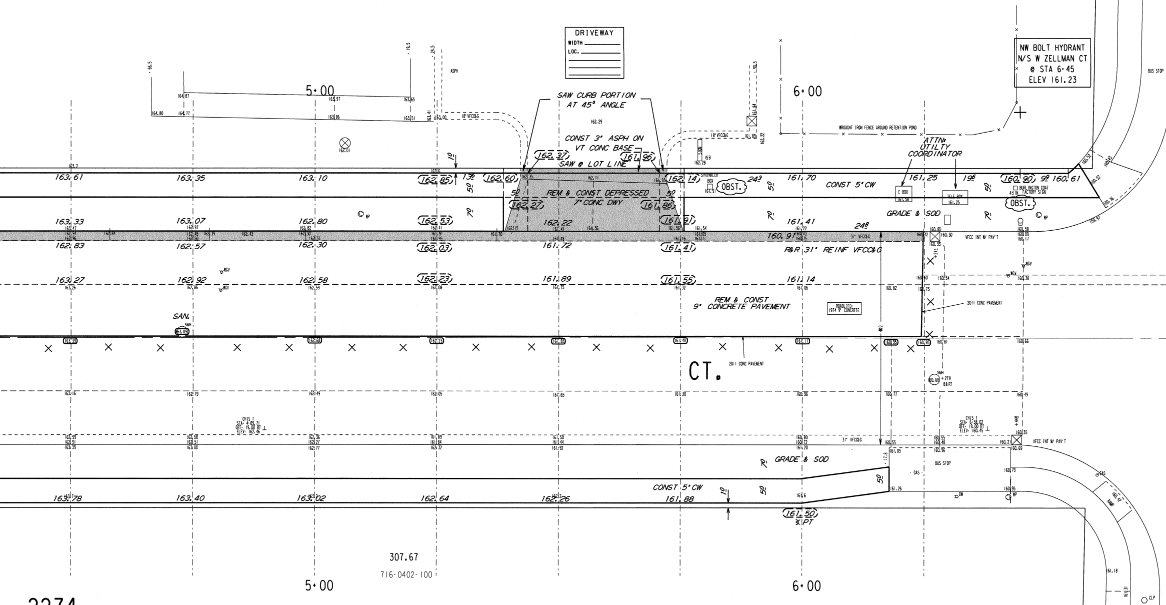
DRIVEWAY
WIDTH
LOC.
NW BOLT HYDRANT
N/S W ZELLMAN CT
@ STA 6+45
ELEV 161.23
5+00
6+00
SAW CURB PORTION
AT 45° ANGLE
CONST 3" ASPH ON
VT CONC BASE
SAW @ LOT LINE
REM & CONST DEPRESSED
7" CONC DWY
18" VFCC&G
WROUGHT IRON FENCE AROUND RETENTION POND
ATTN:
UTILITY
COORDINATOR
CONST 5" CW
E BOX
TELE BOX
BURLINGTON COAT FACTORY SIGN
OBST.
GRADE & SOD
R&R 31" REINF VFCC&G
VFCC INT W/ PAV'T
REM & CONST
9" CONCRETE PAVEMENT
ROADLIFE: 1974 9" CONCRETE
2011 CONC PAVEMENT
SAN.
SMH
CT.
CHIS T
STA- 4+89.71
OFF- 19.00 RT
ELEV- 162.46
CHIS T
STA- 6+98.02
OFF- 19.00 RT
ELEV- 160.45
31" VFCC&G
BUS STOP
GAS
RAMP
CONST 5" CW
161.50
PT
163.61
163.35
163.10
162.85
162.60
162.37
161.96
162.14
161.70
161.25
160.90
160.61
162.27
161.86
163.33
163.07
162.80
162.53
162.22
161.91
161.41
162.83
162.57
162.30
162.03
161.72
161.41
160.97
163.27
162.92
162.58
162.23
161.89
161.55
161.14
163.09
163.78
163.40
163.02
162.64
162.26
161.88
307.67
716-0402-100
5+00
6+00

2274

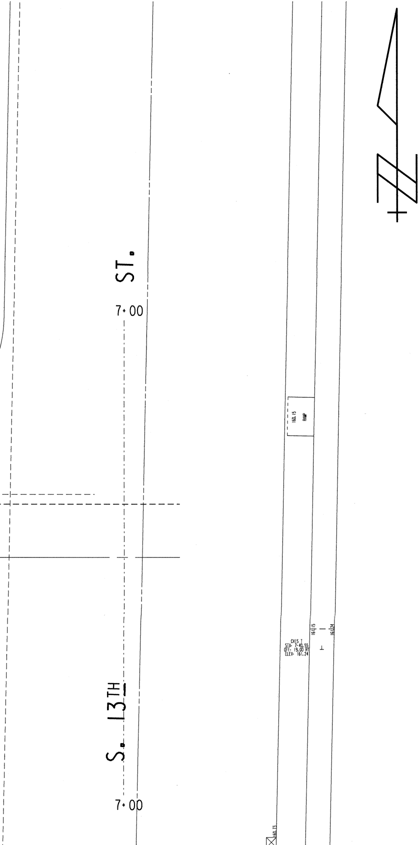
S. 13TH ST.
7+00
7+00
160.15
RAMP
CHIS T
STA- 7+40.55
OFF- 19.00 RT
ELEV- 161.24
161.15
161.24
160.73

NOTES :

- (I), (II), (III), *DENOTES RAMP TYPE.*
- *CONSTRUCT ALL CARRIAGE WALKS AND DRIVEWAYS PER CITY OF MILWAUKEE SPECIFICATIONS.*
- *OFFSET MEASUREMENTS TO TREES, WOOD POLES AND LIGHT POLES ARE TAKEN TO EDGE NEAREST THE CENTERLINE.*
- *OFFSET MEASUREMENTS TO HYDRANTS ARE TAKEN TO THE OPERATING NUT.*
- *ANY TREES TO BE REMOVED AS PART OF THIS PROJECT WILL BE INCLUDED IN THE CONTRACT SPECIAL PROVISIONS*
- *DRILL AND INSTALL TIE RODS TO EXISTING CONCRETE PAVEMENT PER CITY OF MILWAUKEE SPECS.*
- *GRADE & SOD ENTIRE AREA BETWEEN CURB AND CONCRETE WALK.*
- *GRADE & PLACE 1½ FT WIDTH OF SOD IN LAWN AREAS DISTURBED BY CONSTRUCTION, UNLESS OTHERWISE DIRECTED.*
- *INTERNAL MANHOLE SEALS ARE REQUIRED IN ALL MANHOLES MARKED "SAN" (SANITARY).*

CONDITION OF CONCRETE	
△B	BROKEN
△BL	BLUE LINED
△BP	BACK PITCHED
△C	CRACKED
△H	HEAVED
△JF	JOINT FAILURE
△MJ	MUD JACKED
△P	PATCHED
△PC	POOR CONDITION
△S	SETTLED
△SP	SPALLED
△VGC	VERY GOOD
△VPC	VERY POOR

ESTIMATE / CERTIFICATE QUANTITIES

	DESCRIPTION	UNIT	ASSESS.	X-ING			PLAN TOT.	PROJ.TOT.
☒	MOBILIZATION	L.S.						
☒	FINISHING ROADWAY	L.S.						
☒	BARRICADING AND SIGNING	L.S.						
☒	CUTTING	C.Y.						
☒	ROADWAY CUTTING	C.Y.						
☒	FILLING	C.Y.						
☒	ROADWAY FILLING	C.Y.						
☒	PAVEMENT REMOVAL	S.Y.						
	BITUMINOUS SURFACE REMOVAL	S.Y.						
☒	CURB &/OR CURB & GUTTER REMOVAL	L.F.						
☒	CONC.WALK &/OR DRIVEWAY REMOVAL	S.F.						
	SAWING (FULL DEPTH)	L.F.						
☒	SAWING	L.F.						
☒	TREES CLEARING	I.D.						
☒	TREES GRUBBING	I.D.						
☒	CONCRETE CURB & GUTTER	L.F.						
	V.T. CONC.WALK &/OR DRIVEWAY	C.Y.						
☒	5" CONCRETE WALK	S.F.						
☒	7" CONCRETE DRIVEWAY	S.F.						
☒	9" CONCRETE DRIVEWAY	S.F.						
☒	9" CONCRETE PAVEMENT	S.Y.						
	7" CONCRETE ALLEY PAVEMENT	S.Y.						
☒	V.T. CONCRETE BASE	C.Y.						
	CONCRETE BASE	S.Y.						
	TACK COAT	GAL.						
	BASE PREP. FOR ASPHALT SURFACE	L.S.						
☒	V.T.ASPH.CONC.PAV'T.(MAX.)	S.Y.						
	CRUSHED STONE BASE							
☒	3" CRUSHED GRAVEL BASE	S.Y.						
☒	GRAVEL FILLING	TON						
☒	SODDING	S.Y.						
☒	TOPSOIL	C.Y.						
	PAVEMENT GRINDING (ASPHALT)	S.Y.						
	PAVEMENT GRINDING (CONCRETE)	S.Y.						
☒	SEALING PAV'T JOINTS & CRACKS	S.Y.						
	MANHOLE RINGS	EACH						
☒	SEWER FRAME ADJUSTMENT	V.F.						
☒	MANHOLE SEAL (CITY FURNISHED)	EACH						
☒	EROSION CONTROL (TYPE M)	EACH						

DEPARTMENT OF PUBLIC WORKS
INFRASTRUCTURE SERVICES DIVISION
FIELD OPERATIONS
FIELD & DESIGN ENGINEERING
MILWAUKEE, WISCONSIN

FILE NO. 10

PLAN OF: W. ZELLMAN CT. 6600 S, 1300 W

S. 13TH ST. TO A POINT WEST OF S. 13TH ST.

THIS SECTION:

DRAWN BY	S. CULL	DATE:	PROJECT NO.		
DESCRIPTIONS BY	S. CULL	DATE:	ST211 13 0113	SHEET 1 OF 1	
LEVELS BY	W. ALVEY	DATE: 08/27/12	SCALE	1/4 SEC.	ALD.DIST.
LEVELS TRANSF. BY	S. CULL	DATE: 08/05/12	1" = 10'	716	13
DESIGNED BY	S. CULL	DATE: 08/06/12	OBSTRUCTIONS - SEE OBSTRUCTION LIST		
GRADES TRANSF. BY	S. CULL	DATE: 08/07/12	REVISED:		
CHECKED BY	D. Ulrich	DATE: 5/18/13	REVISED:		
APPROVED BY		DATE: 5/20/13	REVISED:		
FILE: V:\PWELIB\PAVING\29215.FIN					
PLOT DATE: 16-MAY-2013					

STORM DRAINAGE UNITS		
C.B.W.- 0	RESET- 1	ABANDON- 0
PROJECT IN (SEPARATED) AREA		

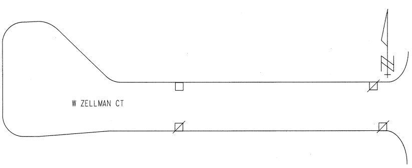
W ZELLMAN CT
S 13TH ST

EROSION CONTROL	AND	C.B. REQUISITION		PLAN
TYPE M	☒ - CBW	☐ - RESET	╳ - ABANDON	▨ NO WORK
5	0	1	0	

TO \ DATE	5/21/13	5/23/13			
ESTIMATING	1				
HOLLOW WALKS	1				
PUBLIC HEARING	1				
CONSTRUCTION	1	6			
SEWER	1				
WATER	1				
STREET LIGHTING	1				
BLDG. SEWERS	1				
MEASURING		1			
FIELD		1			
DISTRICT FILE	2				
FORESTRY	1				
W.E. / G.O.					
WIS. GAS CO.	1				
TRANSIT SYSTEM					
CABLE TV					
UND. GRD. COND.	1				
WATER DIST.	1				
WEPCO N/S					
WEPCO S/S	1				
SEWER SERVICES					
UTILITY COOR.	1				
Traffic ENG	1				
Rm 506		15			
PLAN SIZE	18" X 112"				

W. ZELLMAN CT. - S. 13TH ST. TO A POINT WEST OF S. 13TH ST. ST211130113 18" X 112" 29215 # 10 (1 OF 1)