NOTES :

- (I) (II) (III) , DENOTES RAMP TYPE.
- CONSTRUCT ALL CARRIAGE WALKS AND DRIVEWAYS PER CITY OF MILWAUKEE SPECIFICATIONS.
- OFFSET MEASUREMENTS TO TREES, WOOD POLES AND LIGHT POLES ARE TAKEN TO EDGE NEAREST THE CENTERLINE.
- OFFSET MEASUREMENTS TO HYDRANTS ARE TAKEN TO THE OPERATING NUT.
- GRADE AND PLACE 1.5' WIDTH OF SOD IN LAWN AREAS DISTURBED BY CONSTRUCTION UNLESS OTHERWISE DIRECTED.
- GRIND THE ENTIRE ROADWAY AS NECESSARY TO OBTAIN .12' MINIMUM COVER AT FLANGES, .17' AT BUTT JTS, AND .25' MINIMUM ELSEWHERE.
- [hatched symbol] - 6" POROUS CONCRETE WALK PANELS.
- SEE UTILITY PLAN FOR LIMITS OF 6" UNDERDRAIN.

(1) - INSTALL GRANITE PAVERS

SEE SHEET 2 OF 2

6" POROUS CONCRETE SIDEWALK

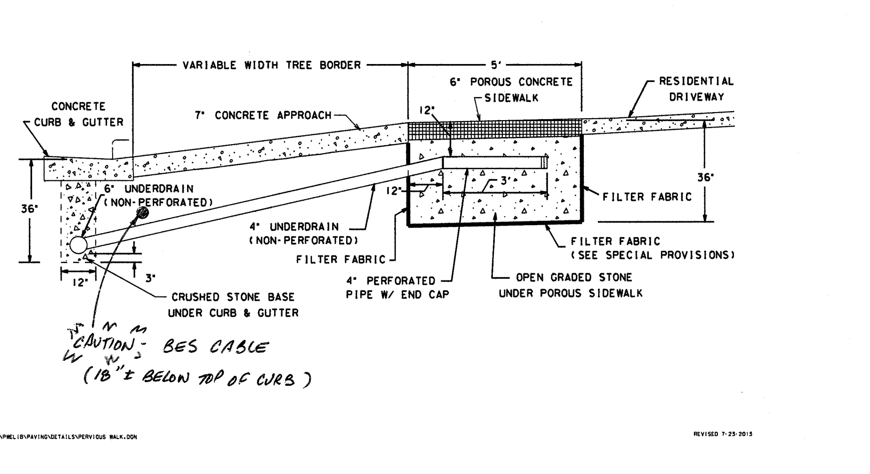

CONDITION OF CONCRETE

- B BROKEN
- BL BLUE LINED
- BP BACK PITCHED
- C CRACKED
- H HEAVED
- JOINT FAILURE
- MUD JACKED
- PATCHED
- POOR CONDITION
- SETTLED
- SPALLED
- VERY GOOD
- VERY POOR

ESTIMATE / CERTIFICATE QUANTITIES

DESCRIPTION	UNIT	ASSESS.	X-ING			PLAN TOT.	PROJ. TOT.
MOBILIZATION	L.S.						
FINISHING ROADWAY	L.S.						
BARRICADING AND SIGNING	L.S.						
CUTTING	C.Y.						
ROADWAY CUTTING	C.Y.						
FILLING	C.Y.						
ROADWAY FILLING	C.Y.						
PAVEMENT REMOVAL	S.Y.						
BITUMINOUS SURFACE REMOVAL	S.Y.						
CURB &/OR CURB & GUTTER REMOVAL	L.F.						
CONC. WALK &/OR DRIVEWAY REMOVAL	S.F.						
SAWING (FULL DEPTH)	L.F.						
SAWING	L.F.						
TREES CLEARING	I.D.						
TREES GRUBBING	I.D.						
CONCRETE CURB & GUTTER	L.F.						
V.T. CONC. WALK &/OR DRIVEWAY	C.Y.						
5" CONCRETE WALK	S.F.						
6" CONCRETE WALK - POROUS	S.F.						
7" CONCRETE DRIVEWAY	S.F.						
CONCRETE PAVEMENT	S.Y.						
7" CONCRETE ALLEY PAVEMENT	S.Y.						
V.T. CONCRETE BASE	C.Y.						
8" CONCRETE BASE	S.Y.						
TACK COAT	GAL.						
BASE PREP. FOR ASPHALT SURFACE	L.S.						
V.T. ASPH. CONC. PAV'T. (MAX.)	S.Y.						
CRUSHED STONE BASE	S.Y.						
OPEN GRADED STONE	S.Y.						
GRAVEL FILLING	TON						
SODDING	S.Y.						
TOPSOIL	C.Y.						
PAVEMENT GRINDING (ASPHALT)	S.Y.						
PAVEMENT GRINDING (CONCRETE)	S.Y.						
SEALING PAV'T JOINTS & CRACKS	S.Y.						
MANHOLE RINGS	EACH						
SEWER FRAME ADJUSTMENT	V.F.						
MANHOLE SEAL (CITY FURNISHED)	EACH						
EROSION CONTROL (TYPE M)	EACH						
4" UNDER DRAIN	L.F.						
6" UNDER DRAIN	L.F.						

DEPARTMENT OF PUBLIC WORKS
INFRASTRUCTURE SERVICES DIVISION
FIELD OPERATIONS
FIELD & DESIGN ENGINEERING
MILWAUKEE, WISCONSIN

FILE NO. 299

PLAN OF: N. EDISON ST. 1000N, 100E

E. STATE ST. TO E. JUNEAU AVE.

THIS SECTION: E. STATE TO TO E. HIGHLAND AVE.

DRAWN BY	G GUERRA	DATE: 09-05-12	PROJECT NO. ST211 11 0152
DESCRIPTIONS BY		DATE:	SHEET 1 OF 2
LEVELS BY	R. PLUTA	DATE: 08/06/10	SCALE 1"=10' ; 1/4 SEC. 392 ; ALD. DIST. 4
LEVELS TRANSF. BY	BARBARA/ CULL	DATE: 12/08/10	
DESIGNED BY	S. CULL	DATE: 06/26/12	OBSTRUCTIONS - SEE OBSTRUCTION LIST
GRADES TRANSF. BY	G GUERRA	DATE: 09-05-12	REVISED: POROUS WALK-JANECEK-6/20/13
CHECKED BY	D. Urbanowski	DATE: 7/26/13	REVISED:
APPROVED BY	[signature]	DATE: 7/31/13	REVISED:

FILE: V:\PWELIB\PAVING\29024.FIN
PLOT DATE: 24-JUL-2013

STORM DRAINAGE UNITS		
C.B.W. - 0	RESET - 9	ABANDON - 0
PROJECT IN (COMB) AREA		

TO \ DATE	8/1/13
ESTIMATING	1
HOLLOW WALKS	1
PUBLIC HEARING	1
CONSTRUCTION	1
SEWER	1
WATER	1
STREET LIGHTING	1
BLDG. SEWERS	1
MEASURING	
FIELD	
DISTRICT FILE	2
FORESTRY	1
W.E. / G.O.	
WIS. GAS CO.	1
TRANSIT SYSTEM	
CABLE TV	
UND. GRD. COND.	1
WATER DIST.	1
WEPCO N/S	1
WEPCO S/S	
SEWER SERVICES	
UTILITY COOR.	1
Trafficking	1
PLAN SIZE	12" X 90"

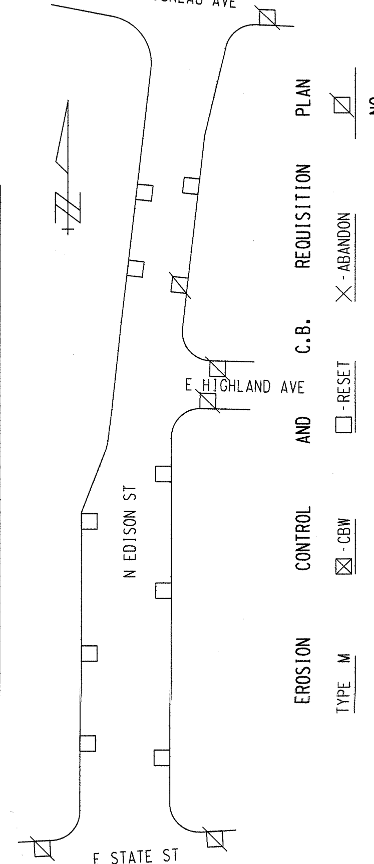

EROSION	CONTROL	AND	C.B.	REQUISITION	PLAN
TYPE M	☒ - CBW	☐ - RESET	✕ - ABANDON		☒ NO WORK
15	0	9	0		

N. EDISON ST. - E. STATE ST. TO E. JUNEAU AVE.

E. STATE ST. TO E. HIGHLAND AVE.

29024 12" X 90" ST211110152

(1 OF 2) #1281 PPG

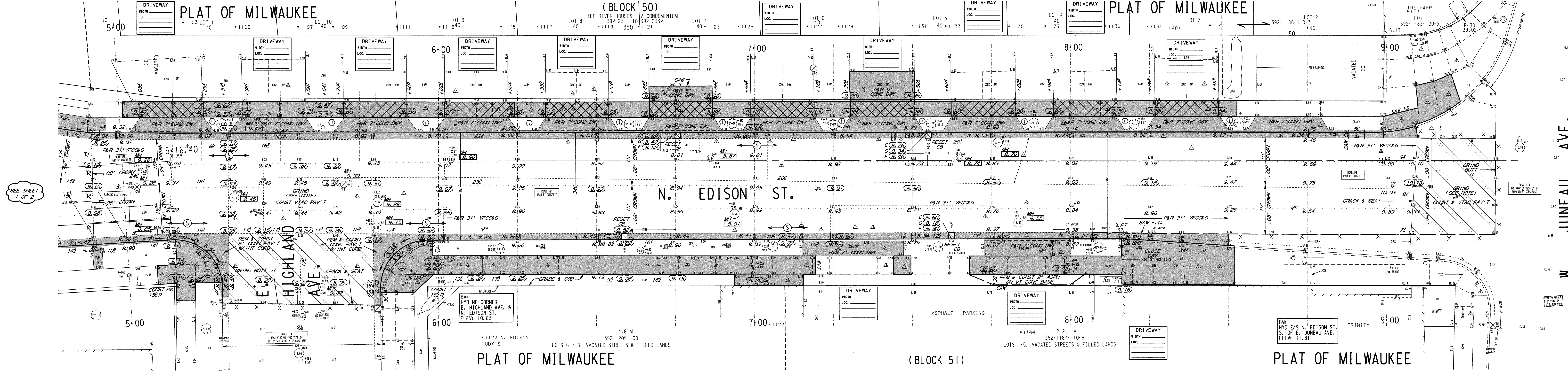

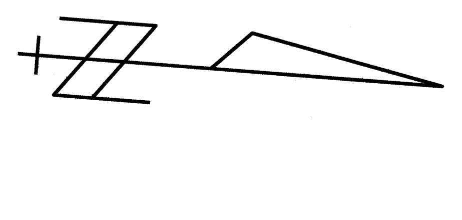

NOTES :

- (I), (II), (III), DENOTES RAMP TYPE.
- CONSTRUCT ALL CARRIAGE WALKS AND DRIVEWAYS PER CITY OF MILWAUKEE SPECIFICATIONS.
- OFFSET MEASUREMENTS TO TREES, WOOD POLES AND LIGHT POLES ARE TAKEN TO EDGE NEAREST THE CENTERLINE.
- OFFSET MEASUREMENTS TO HYDRANTS ARE TAKEN TO THE OPERATING NUT.

CONDITION OF CONCRETE	
B	BROKEN
BL	BLUE LINED
BP	BACK PITCHED
C	CRACKED
H	HEAVED
JF	JOINT FAILURE
MJ	MUD JACKED
P	PATCHED
PC	POOR CONDITION
S	SETTLED
SP	SPALLED
VGC	VERY GOOD
VPC	VERY POOR

ESTIMATE / CERTIFICATE QUANTITIES

DESCRIPTION	UNIT	ASSESS.	X-ING			PLAN TOT.	PROJ. TOT.
MOBILIZATION	L.S.						
FINISHING ROADWAY	L.S.						
BARRICADING AND SIGNING	L.S.						
CUTTING	C.Y.						
ROADWAY CUTTING	C.Y.						
FILLING	C.Y.						
ROADWAY FILLING	C.Y.						
PAVEMENT REMOVAL	S.Y.						
BITUMINOUS SURFACE REMOVAL	S.Y.						
CURB &/OR CURB & GUTTER REMOVAL	L.F.						
CONC.WALK &/OR DRIVEWAY REMOVAL	S.F.						
SAWING (FULL DEPTH)	L.F.						
SAWING	L.F.						
TREES CLEARING	I.D.						
TREES GRUBBING	I.D.						
CONCRETE CURB & GUTTER	L.F.						
V.T. CONC.WALK &/OR DRIVEWAY	C.Y.						
5' CONCRETE WALK	S.F.						
7' CONCRETE DRIVEWAY	S.F.						
CONCRETE PAVEMENT	S.Y.						
7' CONCRETE ALLEY PAVEMENT	S.Y.						
V.T. CONCRETE BASE	C.Y.						
CONCRETE BASE	S.Y.						
TACK COAT	GAL.						
BASE PREP. FOR ASPHALT SURFACE	L.S.						
V.T.ASPH.CONC.PAV'T.(MAX.)	S.Y.						
CRUSHED STONE BASE							
CRUSHED GRAVEL BASE							
GRAVEL FILLING	TON						
SODDING	S.Y.						
TOPSOIL	C.Y.						
PAVEMENT GRINDING (ASPHALT)	S.Y.						
PAVEMENT GRINDING (CONCRETE)	S.Y.						
SEALING PAV'T JOINTS & CRACKS	S.Y.						
MANHOLE RINGS	EACH						
SEWER FRAME ADJUSTMENT	V.F.						
MANHOLE SEAL (CITY FURNISHED)	EACH						
EROSION CONTROL (TYPE M)	EACH						

FILE NO. 300

DEPARTMENT OF PUBLIC WORKS
INFRASTRUCTURE SERVICES DIVISION
FIELD OPERATIONS

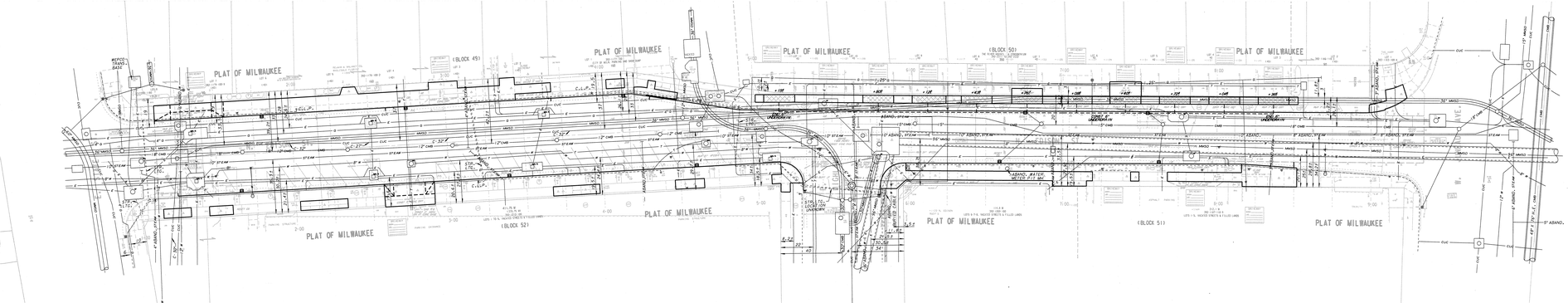
PLAT OF MILWAUKEE
(BLOCK 49)
(BLOCK 50)
(BLOCK 51)
(BLOCK 52)
PLAT OF MILWAUKEE
PLAT OF MILWAUKEE
PLAT OF MILWAUKEE
PLAT OF MILWAUKEE
PLAT OF MILWAUKEE
PLAT OF MILWAUKEE
REPOSE AVENUE
EAST
NOTES :
① ⑤ ⑥ - REMOVE RAMP TYPE
- CONSTRUCT ALL CURB AND GUTTER AND DRIVEWAYS PER CITY OF MILWAUKEE SPECIFICATIONS.
- UTILITY MANHOLES TO BE SET TO FINAL GRADES AND LIGHT STANDARDS TO BE RELOCATED AS NECESSARY BEFORE PAVING.
- OFFSET MEASUREMENTS TO HYDRANTS ARE TAKEN TO THE HYDRANT NUT.
- GRADE AND PLACE 1.5" DEPTH OF SOD IN LAWN AREAS DISTURBED BY CONSTRUCTION UNLESS OTHERWISE DIRECTED.
- WHERE THE EXISTING PAVEMENT IS NECESSARY TO MATCH A 12" DEPTH OF PAVEMENT WILL BE USED. ALL OTHER PAVEMENT SHALL BE 10" DEPTH OF PAVEMENT.
6' POROUS CONCRETE SIDEWALK
VARIABLE WIDTH TREE BORDER
6" POROUS CONCRETE SIDEWALK
RESIDENTIAL DRIVEWAY
7" CONCRETE APPROACH
CONCRETE CURB & GUTTER
#5 REINFORCING BAR (NON-PERFORATED)
FILTER FABRIC
6" AGGREGATE BASE COURSE
UNDERDRAIN (NON-PERFORATED) FILTER FABRIC
4" PERFORATED PIPE W/ END CAP
OPEN GRADED STONE UNDER POROUS SIDEWALK
CRUSHED STONE BASE UNDER CURB & GUTTER
BES CABLE (-18"+/- BELOW TOP OF CURB)
ESTIMATE / CERTIFICATE QUANTITIES
DESCRIPTION
UNIT (EACH) L. FT.
TOTAL TO THIS NO.
UNIT CODE
EACH
L.F. 1 FOOT
S.Y. SQUARE YARD
C.Y. CUBIC YARD
GALLON
LUMP SUM
100 UNITS
1000 UNITS
TON