City of Milwaukee

Department of Public Works

Infrastructure Services Division

Facilities Development & Management Section

MPD - Police Evidence Warehouse FIre Supression

2620 W. Wisconsin Ave.
Milwaukee, Wisconsin

November 22, 2013

Project Number
PL120040120

SHEET INDEX

Drawing Number	Description
T-1	TITLE SHEET
FP-1	FLOOR PLANS - FIRE SUPRESSION
FP-2	FLOOR PLANS - FIRE SUPRESSION
FP-3	FLOOR PLANS - FIRE SUPRESSION
FP-4	FLOOR PLANS - FIRE SUPRESSION
FP-5	FIRE SUPRESSION - DETAILS
FP-6	FIRE ALARM RISER DIAGRAM
AR-1	FLOOR PLANS & DETAILS - ARCHITECTURAL
M-1	PARTIAL PLANS - BSMT & FIRST FLOOR - FIRE PUMP ROOM VENTILTION
E-1	FLOOR PLANS - ELECTRICAL POWER
E-2	FLOOR PLANS - ELECTRICAL POWER
E-3	FLOOR PLANS - ELECTRICAL POWER
E-4	PARTIAL PLANS - ELECTRICAL LIGHTING
E-5	ELECTRICAL ONE-LINE DIAGRAM, RISER DIAGRAM & SCHEDULES

GENERAL NOTES:

1. BEFORE SUBMITTING A BID, THE CONTRACTOR SHALL OBTAIN A COMPLETE SET OF BIDDING DOCUMENTS TO DEVELOP A COMPLETE UNDERSTANDING OF THE ENTIRE PROJECT. THE CONTRACTOR SHALL VISIT THE WORK SITE FOR AN UNDERSTANDING OF SITE CONDITIONS AND PERFORM ANY INVESTIGATIONS NECESSARY TO DEVELOP A COST PROPOSAL FOR THE WORK. THE SUBMISSION OF A PROPOSAL WILL BE CONSTRUED AS EVIDENCE THAT SUCH AN EXAMINATION HAS BEED MADE. NO CONSIDERATION OR ALLOWANCE WILL BE MADE FOR CLAIMS FOR LABOR, EQUIPMENT, OR MATERIALS REQUIRED OR FOR DIFFICULTIES ENCOUNTERED THAT COULD HAVE BEEN FORSEEN HAD A SITE EXAMINATION BEEN MADE.

2. EXISTING CONDITIONS ARE SHOWN BASED ON INFORMATION OBTAINED FROM CURSORY FIELD SURVEYS AND EXISTING BUILDING DOCUMENTS. CONTRACTOR SHALL VERIFY EXISTING CONDITIONS BEFORE PROCEEDING WITH WORK. IF EXISTING CONDITIONS DIFFER FROM DRAWINGS TO THE EXTENT THAT THE DRAWING INTENTION CANNOT BE ACHIEVED, CONTACT THE ENGINEER FOR DIRECTION.

3. WHERE DEMOLITION OF EQUIPMENT OR SYSTEMS IS CALLED FOR ON THE DRAWINGS THE INTENTION OF THIS WORK IS THAT ALONG WITH THE ITEMS IDENTIFIED FOR DEMOLITION RELATED SUPPORTS, PIPING, AND MISCELLANEOUS RELATED ITEMS THAT WILL NO LONGER HAVE A PURPOSE AFTER DEMOLITION OF THE EQUIPMENT OR SYSTEM ALSO BE DEMOLISHED.

4. EXISTING SYSTEMS SERVE OCCUPIED AREAS. DEMOLITION AND INSTALLATION OF NEW SYSTEMS NEED TO BE COORDINATED TO MINIMIZE DOUNTIME. COORDINATE SCHEDULE WITH CITY FOR TYING OF EXISTING TO NEW SYSTEMS.

5. CONTRACTOR SHALL REMOVE ALL DEBRIS RESULTING FROM DEMOLITION AND INSTALLATION OF NEW WORK DAILY. THE WORK AREAS SHALL BE KEPT CLEAN AT ALL TIMES TO THE SATISFACTION OF THE CITY.

6. ANY PENETRATIONS OF THE ELEVATOR MACHINE ROOM WALLS SHALL BE FIRESTOPPED CONSISTENT WITH A 2 HOUR RATED WALL USING UL LISTED MATERIALS AND METHODS.

7. THE CONTRACTOR SHALL SIGN IN AND IDENTIFY ALL PERSONNEL WORKING AT THE SITE ON A DAILY BASIS WITH THE SUPERVISOR IN CHARGE AT THE SITE. ALL PERSONNEL LEAVING THE SITE WILL SIGN OUT PRIOR TO DEPARTURE.

8. IF HAZARDOUS MATERIALS ARE IN ANY WAY SUSPECTED, INCLUDING BUT NOT LIMITED TO ASBESTOS, POLLUTANTS OR PCB, INFORM THE CITY IMMEDIATELY AND SUSPEND PROGRESS ON THAT PORTION OF WORK.

LOCATION MAPS

LOCATION MAP
MILWAUKEE

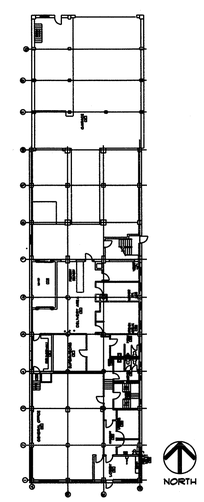

AREA OF WORK

City of Milwaukee
Department of Public Works
Facilities Development & Management Section

CONSULTANT:

GRUMMAN /BUTKUS ASSOCIATES
Energy Efficiency Consultants and Sustainable Design Engineers
1011 North Mayfair Road, Suite 300
Wauwatosa, Wisconsin 53226
414 476.8980

Copyright © 2013 Grumman/Butkus Associates

APPROVED
SUPERVISOR IN CHARGE 12-11-13
CITY ARCHITECT 12/11/13
COMMISSIONER OF PUBLIC WORKS 12/13/13

MPD - Police Evidence Warehouse
Fire Suppression
DPW - Facilities Development & Management Section
TITLE SHEET

DESIGNED BY	BMW
DRAWN BY	JFC
CHECKED BY	BMW
DATE 11/22/13	SCALE NONE
JOB NUMBER	PL120040120
SHEET NUMBER	T-1
OF	

INCLUDE INSPECTOR'S TEST CONNECTION FOR ALL SYSTEMS. PROVIDE ALL NECESSARY MAIN AND AUXILIARY DRAINS.

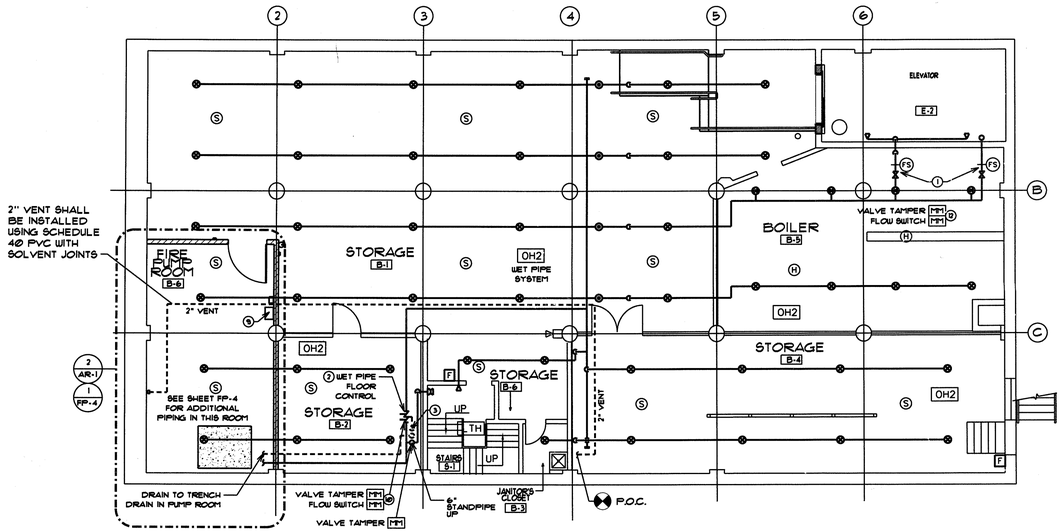

1 Basement Plan - Fire Suppression

SCALE 1/8" = 1'-0"

NORTH

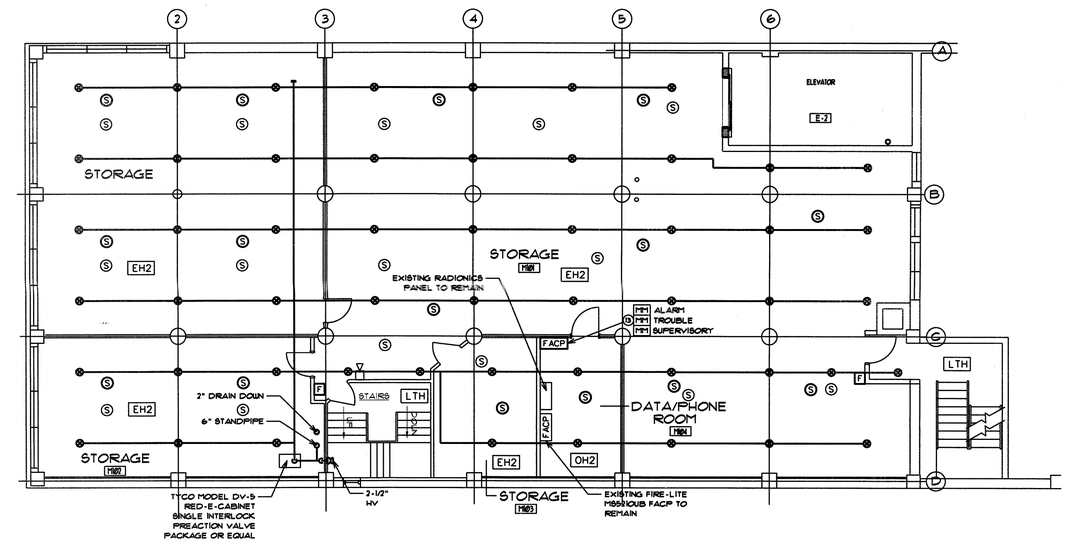

2 Mezzanine Plan - Fire Suppression

SCALE 1/8" = 1'-0"

NORTH

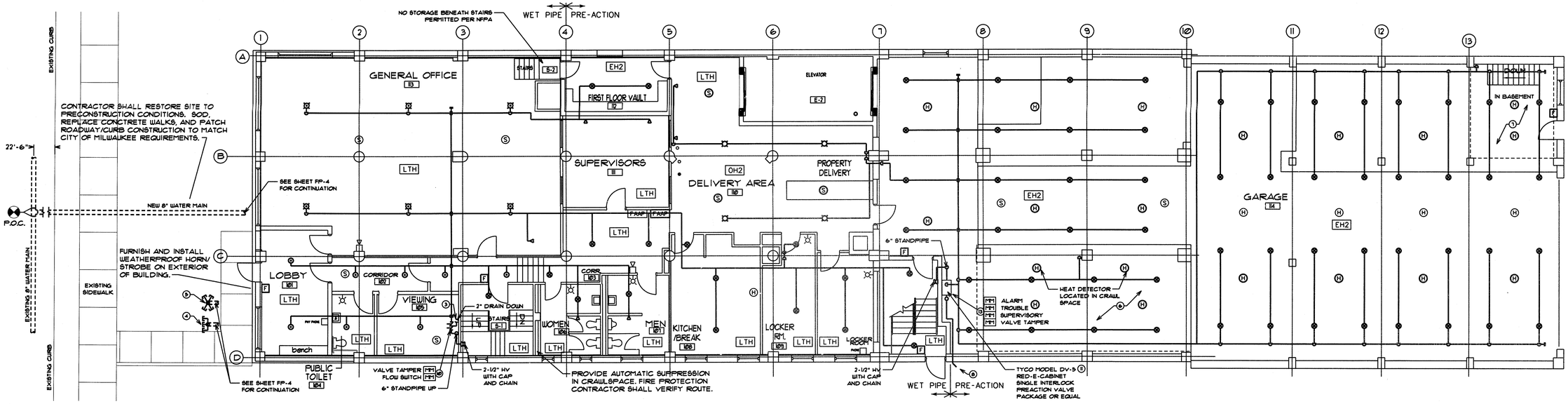

3 First Floor Plan - Fire Suppression

SCALE 1/8" = 1'-0"

NORTH

NOTES

1. FURNISH AND INSTALL ISOLATION VALVE WITH TAMPER SWITCH AND FLOW SWITCH FOR ELEVATOR PIT/SHAFT SPRINKLER HEADS.
2. NEW WET PIPE FLOOR CONTROL ASSEMBLY. ROUTE TEST AND AND DRAIN TO FIRE PUMP ROOM TRENCH DRAIN.
3. ROUTE 2" DRAIN LINE FROM ZONE CONTROL VALVE TO 2" DRAIN FROM ABOVE. ROUTE 2" MAIN DRAIN TO BASEMENT TRENCH DRAIN.
4. PROVIDE THREE-WAY FREE-STANDING FIRE DEPARTMENT CONNECTION. ALL PIPING EXTERIOR TO THE BUILDING SHALL BE GALVANIZED. PROVIDE ENGRAVED, METALLIC SIGNAGE, SECURED TO THE VERTICAL PIPING TO INDICATE FD PUMPER INLET PRESSURE IN ORDER TO DELIVER SYSTEM DEMAND. LOCATE F.D.C. ADJACANT TO SIDEWALK. REPAIR/REPLACE SIDEWALK AS REQUIRED FOR EXCAVATION AND INSTALLATION.
5. FOUR-WAY FIRE PUMP TEST HEADER WITH ANGLE VALVES AND 2-1/2" CAP AND CHAIN. REPAIR/REPLACE SIDEWALK AS REQUIRED FOR EXCAVATION AND INSTALLATION.
6. PROVIDE SPRINKLER PROTECTION BENEATH DASHED AREA OF LOADING DOCK AS COMBUSTIBLE CONSTRUCTION EXISTS. PROVIDE HEAVY DUTY SPRINKLER GUARDS/CAGES ON SPRINKLERS IN THIS AREA. NOTE THAT PIPING/HEADS ARE NOT SHOWN FOR CLARITY.
7. PROVIDE SPRINKLER PROTECTION IN CRAWL SPACE. NOTE THAT PIPING/HEADS ARE NOT SHOWN FOR CLARITY.
8. ROUTE 2" MAIN DRAIN TO EXTERIOR. TERMINATE WITH 30° DOWN TURN FITTING. INCLUDE BALL VALVE IN DISCHARGE LINE TO USE FOR THROTTLING FLOW.
9. THE NEW FIRE ALARM CONTROL PANEL SHALL MONITOR THE FIRE PUMP CONTROLLER FOR THE FOLLOWING CONDITIONS: PUMP RUN, LOSS OF PHASE, AND PHASE REVERSAL.
10. PROVIDE MONITORING FOR THE RESPECTIVE FLOOR ZONE CONTROL VALVE.
11. PRE-PACKAGED PREACTION VALVE & TRIM CABINET WITH CONVENTIONAL FIRE ALARM CONTROL PANEL FOR PREACTION DETECTION/RELEASE BY FIRE PROTECTION CONTRACTOR.
12. PROVIDE MONITORING OF FLOW SWITCH AND VALVE TAMPER FOR ELEVATOR PIT AND ELEVATOR SHAFT.
13. FURNISH AND INSTALL NEW FIRE ALARM CONTROL PANEL (ADDRESSABLE). PANEL SHALL BE EQUIPPED WITH DIALER - UTILIZE POTS LINES FROM EXISTING FACP FOR OUTBOUND NOTIFICATION TO CENTRAL STATION. PROVIDE ALARM, TROUBLE & SUPERVISORY MONITOR MODULES FOR TRANSMISSION OF ALARMS FROM EXISTING FACP.

HAZARD CLASSIFICATIONS:

LTH	LIGHT HAZARD 0.10 GPM OVER 1500 SQ.FT.
OH2	ORDINARY HAZARD GROUP 2 0.20 GPM OVER 1500 SQ.FT.
EH2	EXTRA HAZARD GROUP 2 0.40 GPM OVER 2500 SQ.FT. (ADJUSTED FOR HIGH TEMP SPRINKLER HEADS AND PREACTION)

SPRINKLER HEAD LEGEND

- PENDANT SPRINKLER HEAD
- UPRIGHT SPRINKLER HEAD WITH HEAD GUARD
- EXTENDED COVERAGE PENDANT SPRINKLER
- EXTENDED COVERAGE UPRIGHT SPRINKLER
- UPRIGHT SPRINKLER ON SPRIG
- SIDEWALL SPRINKLER HEAD

FIRE DETECTION LEGEND

- S SMOKE DETECTOR - PHOTOELECTRIC
- H HEAT DETECTOR - 135°F
- F FIRE ALARM PULL STATION
- WALL MOUNTED STROBE
- WALL MOUNTED HORN/STROBE
- CEILING MOUNTED HORN/STROBE
- CEILING MOUNTED STROBE
- M MONITOR MODULE
- S SYMBOL SHOWN LIGHT IS EXISTING
- S SYMBOL SHOWN DARK IS NEW

City of Milwaukee
Department of Public Works
Buildings & Fleet Services

GRUMMAN/BUTKUS ASSOCIATES
Energy Efficiency Consultants and Sustainable Design Engineers
1011 North Mayfair Road, Suite 300
414 476.8980
Copyright © 2013 Grumman/Butkus Associates

MPD Police Evidence Warehouse
Fire Suppression
2620 W. Wisconsin Avenue
FLOOR PLANS
FIRE SUPPRESSION

REVISIONS

DESIGNED BY	JLF
DRAWN BY	JFC
CHECKED BY	JLF
DATE 11/22/13	SCALE 1/8"=1'-0"
JOB NUMBER	PL120040120
SHEET NUMBER	FP-1
OF	

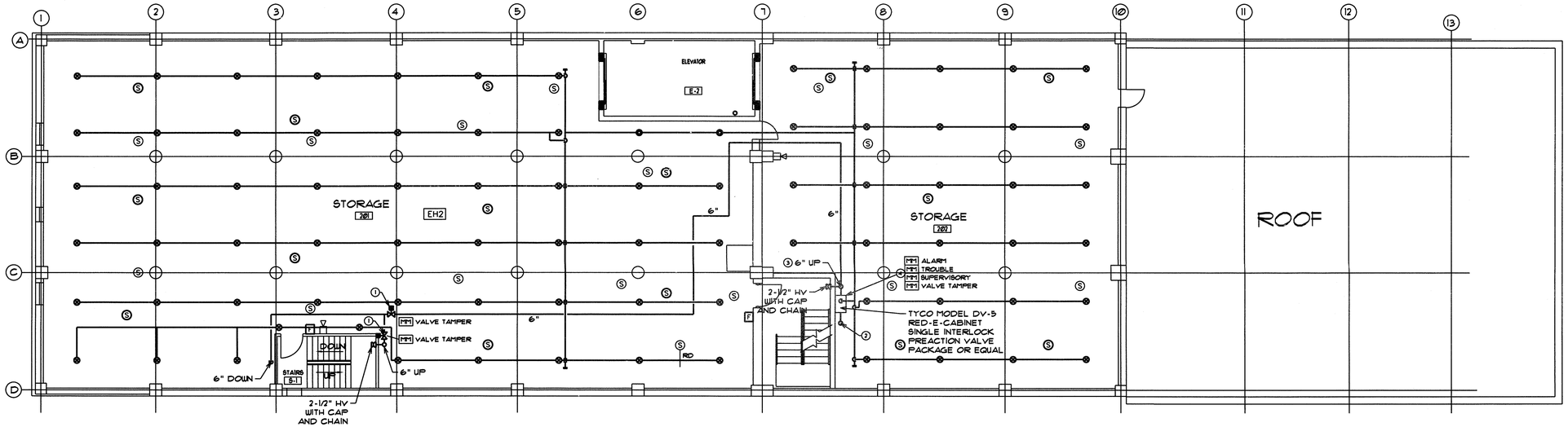

1 Second Floor Plan - Fire Suppression

SCALE 1/8" = 1'-0"

NORTH

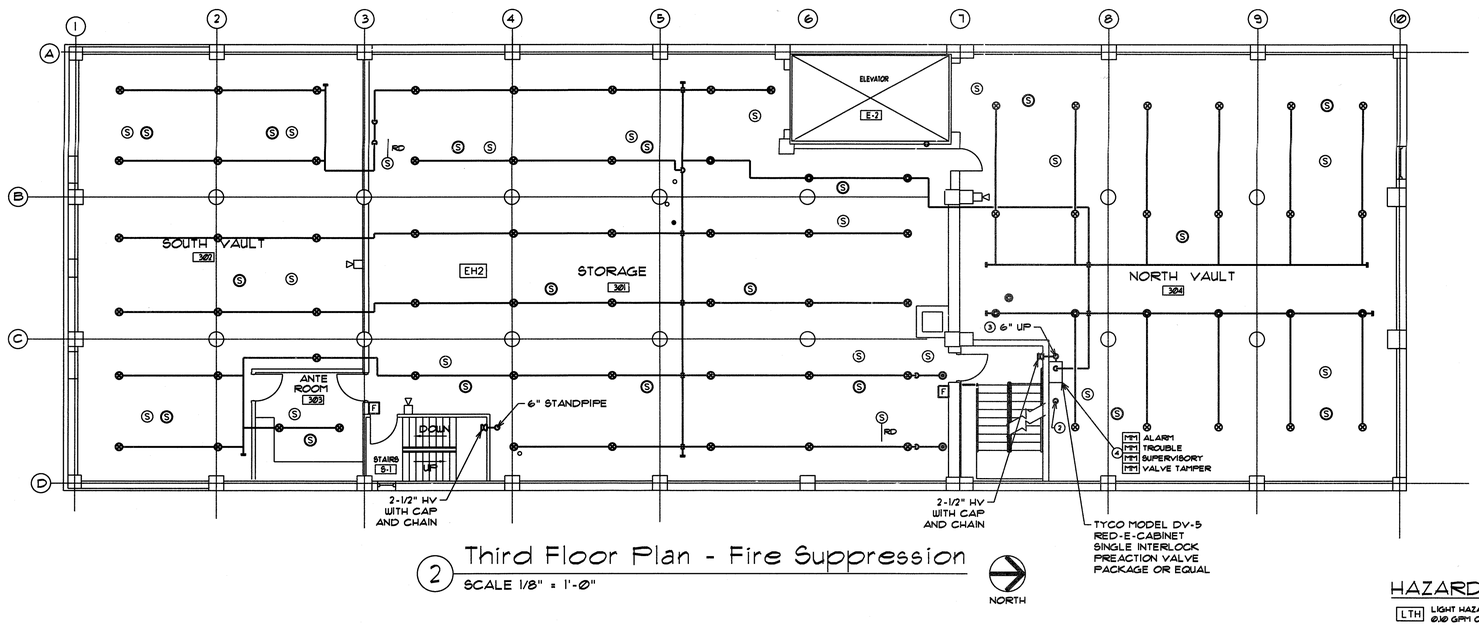

2 Third Floor Plan - Fire Suppression

SCALE 1/8" = 1'-0"

NORTH

FIRE DETECTION LEGEND

- (S) SMOKE DETECTOR - PHOTOELECTRIC
- (H) HEAT DETECTOR - 135°F
- (F) FIRE ALARM PULL STATION
- WALL MOUNTED STROBE
- WALL MOUNTED HORN/STROBE
- CEILING MOUNTED HORN/STROBE
- CEILING MOUNTED STROBE
- MM MONITOR MODULE
- (S) SYMBOL SHOWN LIGHT IS EXISTING
- (S) SYMBOL SHOWN DARK IS NEW

SPRINKLER HEAD LEGEND

- PENDANT SPRINKLER HEAD
- UPRIGHT SPRINKLER HEAD WITH HEAD GUARD
- EXTENDED COVERAGE PENDANT SPRINKLER
- EXTENDED COVERAGE UPRIGHT SPRINKLER
- UPRIGHT SPRINKLER ON SPRIG
- SIDEWALL SPRINKLER HEAD

HAZARD CLASSIFICATIONS:

LTH	LIGHT HAZARD 0.10 GPM OVER 1500 SQFT.
OH2	ORDINARY HAZARD GROUP 2 0.20 GPM OVER 1500 SQFT.
EH2	EXTRA HAZARD GROUP 2 0.40 GPM OVER 2500 SQFT. (ADJUSTED FOR HIGH TEMP SPRINKLER HEADS AND PREACTION)

NOTES

1. SUPERVISED BUTTERFLY VALVE WITH TAMPER SWITCH.
2. 2" MAIN DRAIN DOWN.
3. 6" COMBINATION RISER STANDPIPE
4. PRE-PACKAGED PREACTION VALVE & TRIM CABINET WITH CONVENTIONAL FIRE ALARM CONTROL PANEL FOR PREACTION DETECTION/RELEASE BY FIRE PROTECTION CONTRACTOR.

City of Milwaukee
Department of Public Works
Buildings & Fleet Services

GRUMMAN/BUTKUS ASSOCIATES
Energy Efficiency Consultants and Sustainable Design Engineers
1011 North Mayfair Road, Suite 300
414 476.8980
Copyright © 2013 Grumman/Butkus Associates

MPD Police Evidence Warehouse
Fire Suppression
2620 W. Wisconsin Avenue
FLOOR PLANS
FIRE SUPPRESSION

REVISIONS

DESIGNED BY	JLF
DRAWN BY	JFC
CHECKED BY	JLF
DATE 11/22/13	SCALE 1/8"=1'-0"
JOB NUMBER	PL120040120
SHEET NUMBER	FP-2
OF	

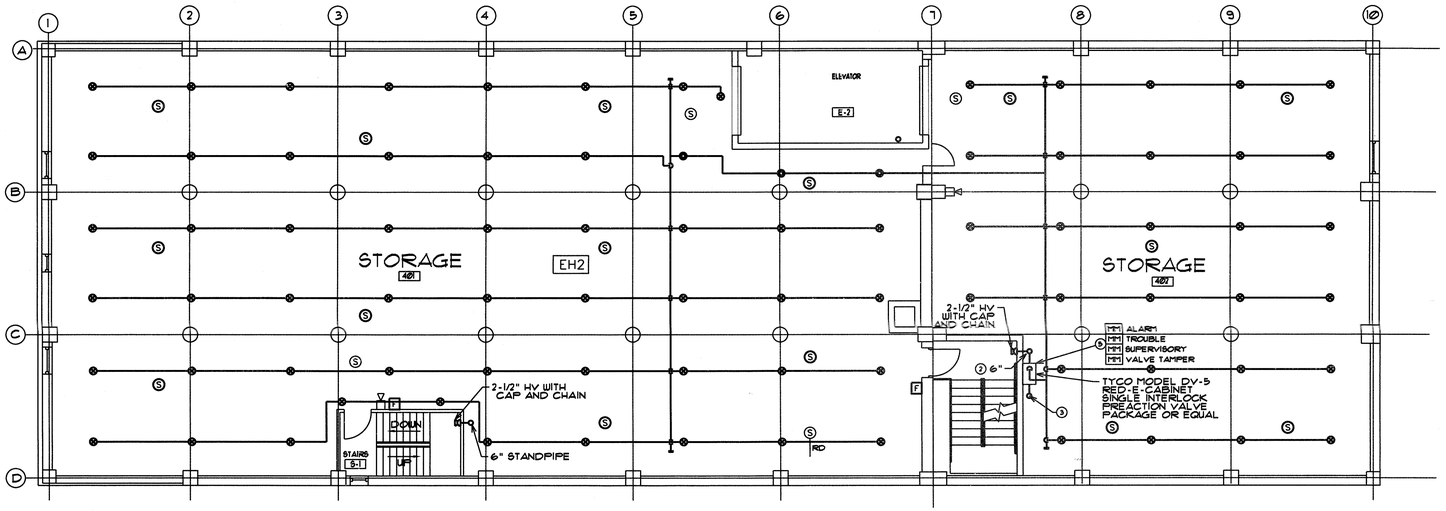

1 Fourth Floor Plan - Fire Suppression

SCALE 1/8" = 1'-0"

NORTH

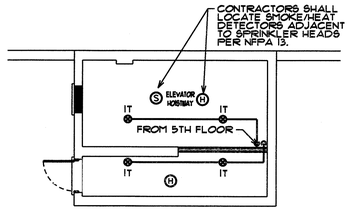

Elevator Room Roof Level Plan Fire Suppression

3 SCALE 1/8" = 1'-0"

NORTH

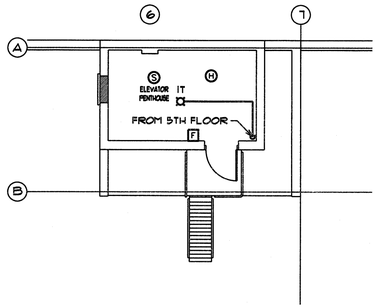

Elevator Room Penthouse Level Plan Fire Suppression

4 SCALE 1/8" = 1'-0"

NORTH

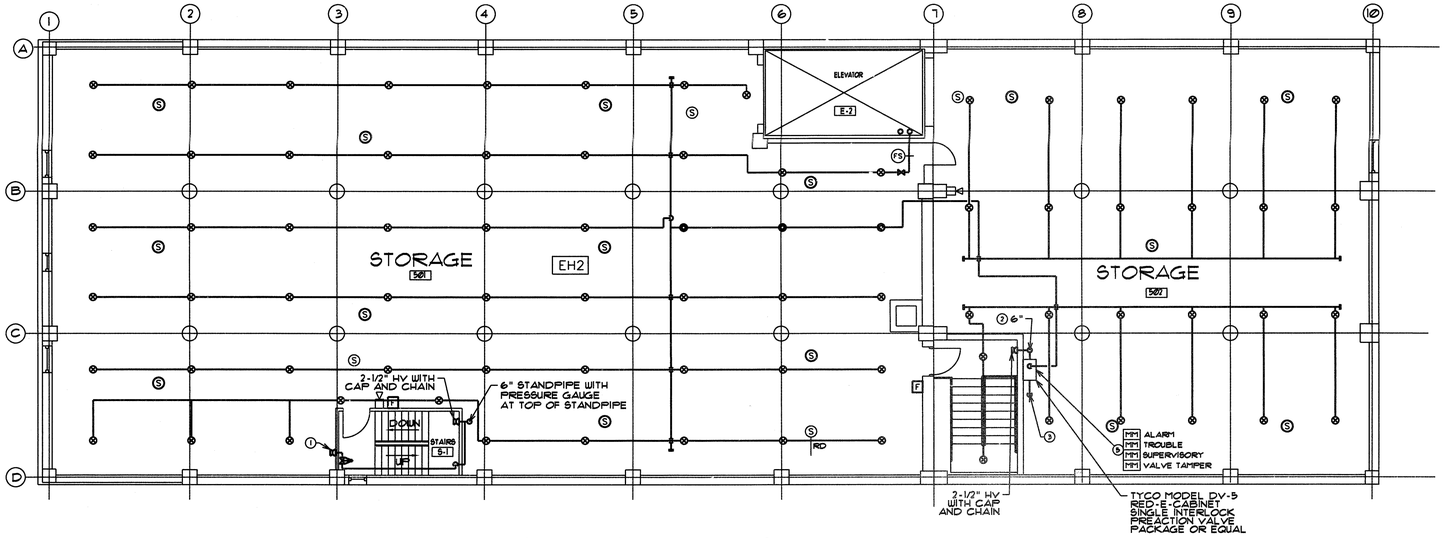

2 Fifth Floor Plan - Fire Suppression

SCALE 1/8" = 1'-0"

NORTH

NOTES

1. AT ROOF LEVEL, PROVIDE 2-1/2" HOSE CONNECTION WITH POST INDICATOR VALVE-FROST PROOF. INCLUDE CAP AND CHAIN. SEE TYPICAL DETAIL #8 ON SHEET FP-5.
2. 6" COMBINATION RISER STANDPIPE WITH PRESSURE GAUGE AT TOP OF SRANDPIPE.
3. 2" MAIN DRAIN DOWN.
4. FURNISH AND INSTALL ISOLATION VALVE WITH TAMPER SWITCH AND FLOW SWITCH TO SERVE ELEVATOR SHAFT HOISTWAY AND PENTHOUSE ABOVE.
5. PRE-PACKAGED PREACTION VALVE & TRIM CABINET WITH CONVENTIONAL FIRE ALARM CONTROL PANEL FOR PREACTION DETECTION/RELEASE BY FIRE PROTECTION CONTRACTOR.

FIRE DETECTION LEGEND

- (S) SMOKE DETECTOR - PHOTOELECTRIC
- (H) HEAT DETECTOR - 135°F
- (F) FIRE ALARM PULL STATION
- WALL MOUNTED STROBE
- WALL MOUNTED HORN/STROBE
- CEILING MOUNTED HORN/STROBE
- CEILING MOUNTED STROBE
- MONITOR MODULE
- (S) SYMBOL SHOWN LIGHT IS EXISTING
- (S) SYMBOL SHOWN DARK IS NEW

SPRINKLER HEAD LEGEND

- PENDANT SPRINKLER HEAD
- UPRIGHT SPRINKLER HEAD WITH HEAD GUARD
- EXTENDED COVERAGE PENDANT SPRINKLER
- EXTENDED COVERAGE UPRIGHT SPRINKLER
- UPRIGHT SPRINKLER ON SPRIG
- SIDEWALL SPRINKLER HEAD

HAZARD CLASSIFICATIONS:

LTH	LIGHT HAZARD @10 GPM OVER 1500 SQFT.
OH2	ORDINARY HAZARD GROUP 2 @20 GPM OVER 1500 SQFT.
EH2	EXTRA HAZARD GROUP 2 @40 GPM OVER 2500 SQFT. (ADJUSTED FOR HIGH TEMP SPRINKLER HEADS AND PREACTION)

City of Milwaukee
Department of Public Works
Buildings & Fleet Services

GRUMMAN/BUTKUS ASSOCIATES
Energy Efficiency Consultants and Sustainable Design Engineers
1011 North Mayfair Road, Suite 300
414 476.8980
Copyright © 2013 Grumman/Butkus Associates

MPD Police Evidence Warehouse
Fire Suppression
2620 W. Wisconsin Avenue
FLOOR PLANS
FIRE SUPPRESSION

REVISIONS

DESIGNED BY	JLF
DRAWN BY	JFC
CHECKED BY	JLF
DATE 11/22/13	SCALE 1/8"=1'-0"
JOB NUMBER	PL120040120
SHEET NUMBER	FP-3
OF	

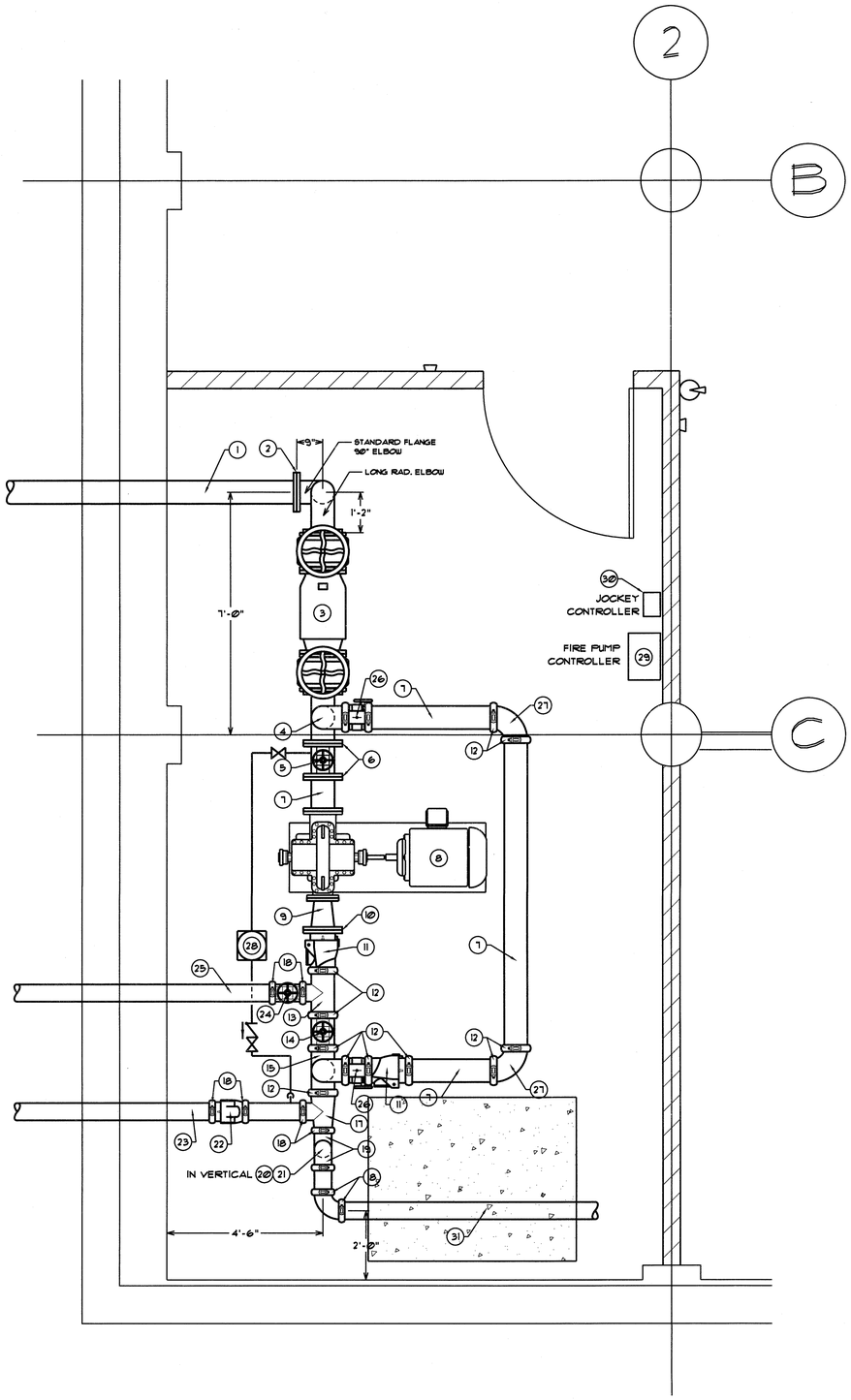

1 Partial Basement Plan - Fire Suppression

SCALE 1/2" = 1'-0"

NORTH

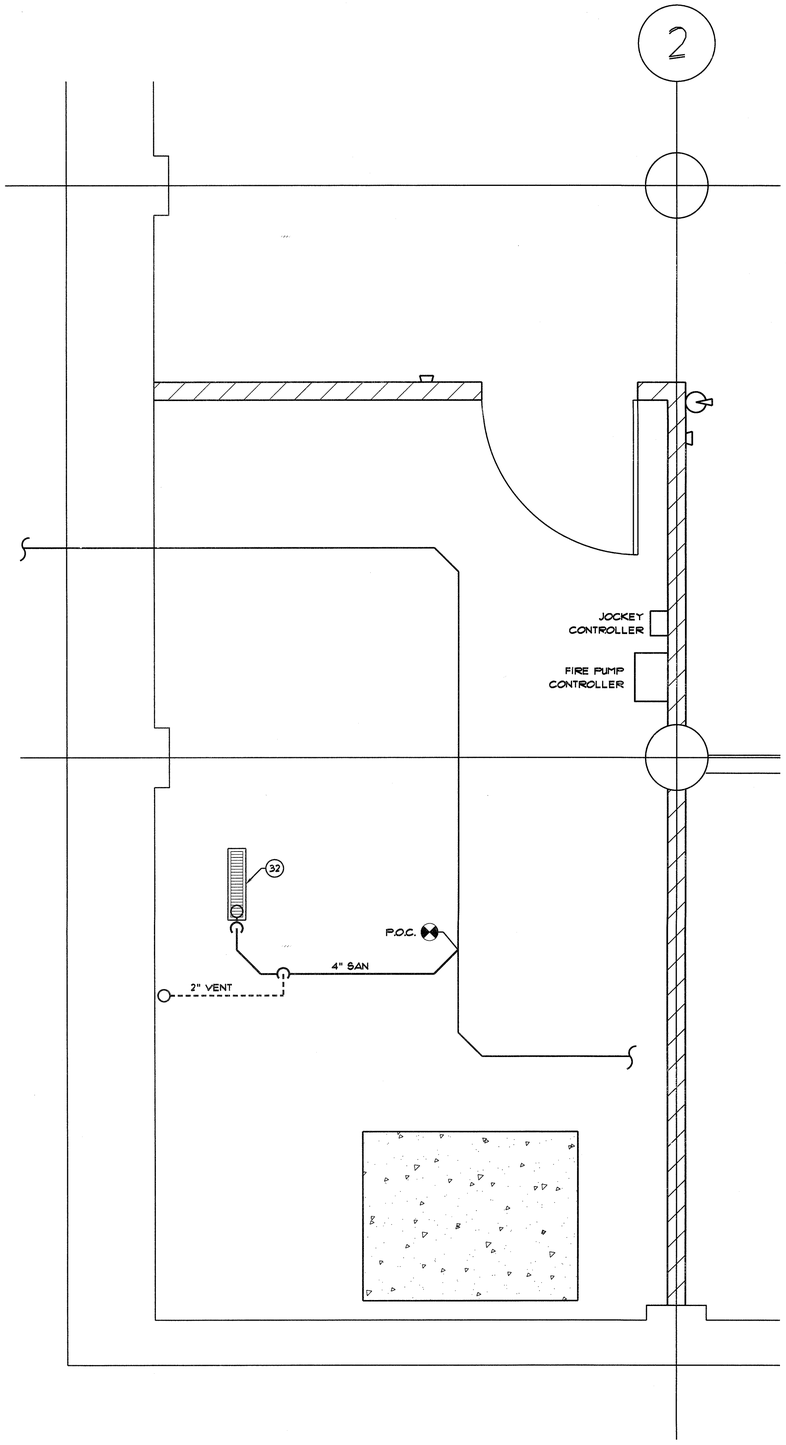

2 Partial Basement Plan - Sanitary Piping

SCALE 1/2" = 1'-0"

NORTH

MPD Evidence Warehouse Fire Pump System

1. 8" D.I. WATER SERVICE MAIN
2. 8" C.I. FLANGED 90° ELBOW
3. AMES 8" MAXIM SERIES MODEL M300 OS&Y DOUBLE DETECTOR CHECK ASSEMBLY WITH TAMPER SWITCHES
4. 8"X 8"X 8" C.I. FLANGED TEE
5. 8" FLANGED OS&Y VALVE WITH TAMPER SWITCH
6. 8" C.I. FLANGE
7. 8" SCH. 40 BLK PIPE
8. ITT-AC 8X6X14F HORIZONTAL SPLIT CASE FIRE PUMP, 1,000 GPM @ 85 PSI, 75 HP, 1,750 RPM, 460 VOLT, 3 PH, 60 HZ
9. 8"X6" C.I. CONCENTRIC FLANGED REDUCER
10. 8" GROOVED FLANGE
11. 8" GROOVED END SWING CHECK VALVE
12. 8" GROOVED COUPLING
13. 8"X8"X6"GROOVED TEE
14. 8" GROOVE END OS&Y GATE VALVE WITH TAMPER SWITCH
15. 8" GROOVED TEE
16. 8"X6" GROOVED REDUCER COUPLING
17. 6" GROOVED TEE
18. 6" GROOVED COUPLING
19. 6" GROOVED 90° ELBOW
20. 6" GROOVED BUTTERFLY VALVE WITH TAMPER SWITCH
21. 6" WATER FLOW SWITCH
22. 6" GROOVED SWING CHECK VALVE WITH 1/2" BALL DRIP VALVE
23. 6" GALVANIZED SCH 40 PIPE TO 6"X2-1/2" THREE WAY FIRE DEPARTMENT CONNECTION
24. 6" GROOVED END OS&Y GATE VALVE WITH TAMPER SWITCH
25. 6" GALVANIZED SCH 40 PIPE TO GROOVED FOUR WAY TEST HEADER WITH (4) 2-1/2" RB ANGLE VALVES WITH CAPS AND CHAINS
26. 8" GROOVED BUTTERFLY VALVE WITH TAMPER SWITCH
27. 8" GROOVED 90° ELBOW
28. 10 GPM @ 128 PSI REGENERATIVE TURBINE JOCKEY PUMP, 1-1/2 HP, 460 VOLT, 3 PH, 60 HZ
29. CUTLER HAMMER ACROSS THE LINE MODEL FD30 FIRE PUMP CONTROLLER, 480 VOLT, 3 PH, 60 HZ, 100,000 AIC
30. JOCKEY PUMP CONTROLLER, ACROSS THE LINE TYPE, 460 VOLT, 3 PH, 60 HZ
31. 6" SUPPLY TO COMBINED STANDPIPE/SPRINKLER SYSTEM RISER
32. 2' TRENCH DRAIN. ROUTE 4" SANITARY FROM NEW TRENCH DRAIN AND CONNECT TO EXISTING SANITARY. ROUTE 2" VENT TO STORAGE B-4 AND CONNECT TO EXISTING VENT.

City of Milwaukee
Department of Public Works
Buildings & Fleet Services

GRUMMAN/BUTKUS ASSOCIATES
Energy Efficiency Consultants and Sustainable Design Engineers
1011 North Mayfair Road, Suite 300
414 476.8980
Copyright © 2013 Grumman/Butkus Associates

MPD Police Evidence Warehouse
Fire Suppression
2620 W. Wisconsin Avenue
FLOOR PLANS
FIRE SUPPRESSION

REVISIONS

DESIGNED BY JLF
DRAWN BY JFC
CHECKED BY JLF
DATE 11/22/13
SCALE 1/2"=1'-0"
JOB NUMBER PL120040120
SHEET NUMBER FP-4
OF

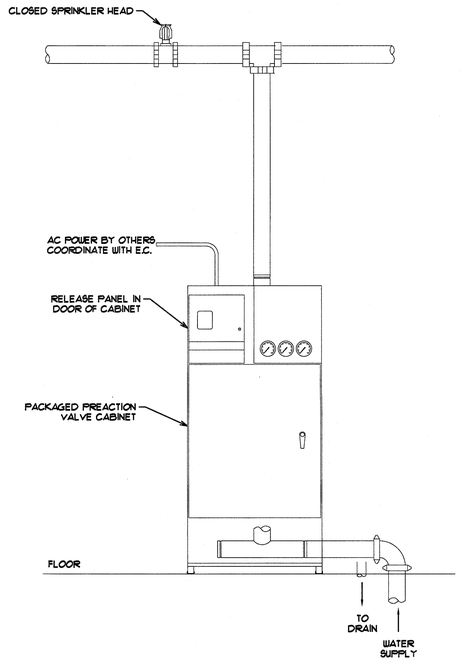

BASE BID PREACTION VALVE TRIM SCHEMATIC

1 DIAGRAMMATIC

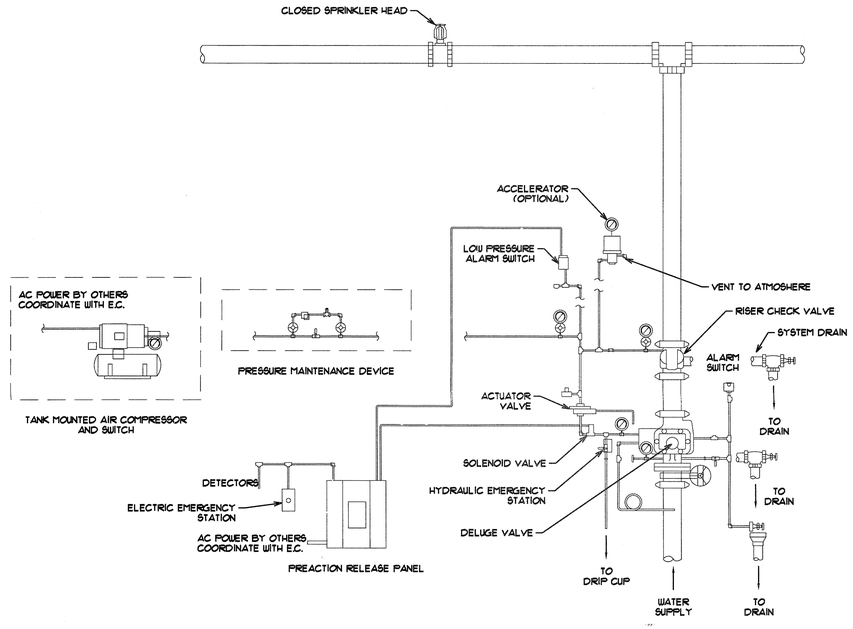

ALTERNATE PREACTION VALVE TRIM SCHEMATIC

2 DIAGRAMMATIC

GENERAL NOTES:

DRAWINGS ARE INTENDED TO SHOW SCOPE OF WORK ONLY. CONTRACTOR SHALL BE RESPONSIBLE FOR COMPLETE SPRINKLER PLANS, APPROVALS, AND INSTALLATION. CONTRACTOR SHALL PROVIDE ALL REQUIRED PIPING, VALVES, APPURTENANCES, AND EQUIPMENT NECESSARY FOR A COMPLETE SYSTEM. ADDITIONAL TEES, ELBOWS, BENDS, HEADS, ETC. SHALL BE PROVIDED AS NECESSARY TO AVOID EXISTING OBSTRUCTIONS. AT THE END OF CONSTRUCTION, THE ENTIRE SYSTEM SHALL FULLY COMPLY WITH THE LOCAL FIRE CHIEF, WISCONSIN CODES, AND APPLICABLE NFPA STANDARDS.

SHOP DRAWINGS SHALL INCLUDE DETAILED DIMENSIONS (HEIGHT ABOVE THE DECK) FOR ALL PIPING INSTALLED ABOVE THE ROOF.

CONTRACTOR MAINTAIN THE INTEGRITY OF ALL RATED ENCLOSURES (SMOKE AND FIRE RATED) THROUGHOUT THE FACILITY. REFER TO THE ARCHITECTURAL PLANS FOR LOCATIONS OF RATED ASSEMBLIES. SEAL ALL PENETRATIONS (RATED AND NON-RATED) IN ACCORDANCE WITH SPECIFICATION SECTION 20 05 00 (SEALING AND FIRESTOPPING REQUIREMENTS).

SPRINKLER GUARDS: PROVIDE SPRINKLER GUARDS ON ALL EXPOSED SPRINKLER HEADS.

DO NOT DRILL THROUGH ANY STRUCTURAL MEMBER WITHOUT PRIOR CONSENT. ANY HOLES MADE THROUGH STRUCTURAL MEMBERS OF THE BUILDING SHALL BE VERIFIED AND APPROVED IN WRITING BY A STRUCTURAL ENGINEER.

FIRE PROTECTION CONTRACTOR SHALL PROVIDE A COMPLETE FIRE PROTECTION SYSTEM INCLUDING ALL NECESSARY PIPING, VALVES, CONTROLS, FITTINGS, HARDWARE, AND ALL APPLICABLE ELECTRICAL EQUIPMENT. FIRE PROTECTION CONTRACTOR SHALL BE RESPONSIBLE FOR ALL TAMPER SWITCHES, FLOW SWITCHES, INTERIOR AND EXTERIOR ALARM BELLS, AND OTHER TYPICAL EQUIPMENT.

COMPLY WITH ALL APPLICABLE REQUIREMENTS OF THE WISCONSIN CODE, INTERNATIONAL BUILDING CODES, LOCAL FIRE CHIEF OR FIRE MARSHAL, INSURANCE UNDERWRITER, APPLICABLE NFPA STANDARDS, AND OTHER RECOGNIZED INDUSTRY STANDARDS.

ALL SYSTEM COMPONENTS SHALL BE U.L. LISTED AND F.M. APPROVED. EQUIPMENT AND RISER ASSEMBLIES SHALL BE U.L. LISTED AND F.M. APPROVED AS ASSEMBLIES, NOT INDIVIDUAL COMPONENTS. WHERE QUICK-RESPONSE TYPE SPRINKLER HEADS ARE SPECIFIED, THE SPRINKLER HEADS ALONE MAY BE U.L. LISTED ONLY, PROVIDED THAT THEIR USE IS ACCEPTED AND APPROVED BY THE OWNER'S INSURANCE UNDERWRITER AND THE LOCAL FIRE CHIEF.

CONTRACTOR SHALL BE RESPONSIBLE FOR FINAL PLANNING, DESIGN, SPRINKLER HEAD LAYOUT, HYDRAULIC CALCULATIONS, AND COMPLETE REGULATORY APPROVAL. ALL WORK TO BE PERFORMED BY LICENSED PERSONS EMPLOYED BY THE SPRINKLER CONTRACTOR.

CONTRACTOR SHALL PERFORM FLOW TESTS PRIOR TO PREPARATION OF DESIGN CALCULATIONS. TEST SHALL BE REPRESENTATIVE OF HIGH WATER USE PERIODS. CONTRACTOR SHALL CONTACT THE LOCAL MUNICIPALITY AT LEAST 7 DAYS PRIOR TO ANY TEST. COORDINATE SYSTEM DISRUPTION (INCLUDING EXACT TIME AND APPROXIMATE DURATION OF TEST) WITH ALL PARTIES. CONTRACTOR SHALL BE RESPONSIBLE FOR ANY SERVICE DISRUPTIONS RESULTING FROM IMPROPER NOTIFICATION.

HYDRAULIC CALCULATIONS: SPRINKLER SYSTEMS SHALL BE DESIGNED WITH A MINIMUM 10% SAFETY FACTOR.

WET SPRINKLER PIPING AND SYSTEM COMPONENTS SHALL BE INSTALLED IN LOCATIONS WITH ADEQUATE HEAT AND SUPPRESSION TO PREVENT FREEZING. DO NOT INSTALL PIPING WITHIN EXTERIOR WALLS OR ADJACENT TO AREAS SUBJECT TO FREEZING CONDITIONS.

INSTALL SPRINKLER PIPING SO THAT THE SYSTEM CAN BE DRAINED IN ACCORDANCE WITH NFPA-13. WHERE POSSIBLE, SLOPE TO MAIN DRAIN VALVE. PROVIDE AUXILIARY DRAINS FOR TRAPPED PIPING. PIPE MAIN DRAIN VALVE, INSPECTOR'S TEST CONNECTIONS, AND AUXILIARY DRAINS TO GRADE OR TO AN AIR-GAP SEWER RECEPTOR. AUXILIARY DRAINS SHALL BE EQUIPPED WITH THREADED HOSE CONNECTIONS FOR DRAINAGE.

PROVIDE FIRE DEPARTMENT PUMPER CONNECTIONS AS REQUIRED BY NFPA 13, APPLICABLE STATE CODES, AND IN CONJUNCTION WITH THE LOCAL FIRE CHIEF AND FIRE DEPARTMENT. VERIFY HOSE CONNECTION REQUIREMENTS, INCLUDING SIZE AND THREAD, WITH LOCAL FIRE DEPARTMENT. ALL FIRE DEPARTMENT CONNECTIONS SHALL MATCH THOSE IDENTIFIED BY THE LOCAL FIRE DEPARTMENT.

INSTALL INSPECTOR'S TEST CONNECTIONS SIZED AND LOCATED IN ACCORDANCE WITH NFPA STANDARDS, COMPLETE WITH SHUT-OFF VALVE.

ROUTE ALL PIPING AS NECESSARY TO AVOID STRUCTURAL, MECHANICAL, ELECTRICAL, AND OTHER PIPING OBSTRUCTIONS IN CEILING PLENUMS, WALL CHASES, AND OTHER AREAS OF INSTALLATION. PROVIDE ADDITIONAL TEES, ELBOWS, BENDS, AUXILIARY DRAINS, SPRINKLER HEADS, ETC. AS NECESSARY TO ACCOMMODATE OTHER TRADES. DO NOT ROUTE PIPING IN EXTERIOR WALLS, ABOVE ELECTRICAL PANELBOARDS, OR WITHIN ANY DESIGNATED AND/OR CODE REQUIRED EQUIPMENT CLEARANCES. CLOSELY COORDINATE PIPE ROUTING WITH OTHER TRADES TO AVOID CONFLICT IN THE FIELD. ADJUST ROUTING AS NECESSARY TO MAINTAIN REASONABLE ACCESS TO MECHANICAL EQUIPMENT, PLUMBING CLEANOUTS, ELECTRICAL DISCONNECTS, OR OTHER EQUIPMENT REQUIRING PERIODIC SERVICE AND MAINTENANCE.

SPRINKLER HEADS SHALL BE INSTALLED CENTER OF TILE. ALL SPRINKLER HEADS INSTALLED IN FINISHED CEILINGS SHALL BE CONCEALED.

WHERE OBSTRUCTIONS (DUCTWORK, EQUIPMENT, ETC.) ARE GREATER THAN 48" WIDE, FIRE SUPPRESSION CONTRACTOR SHALL PROVIDE ADDITIONAL SPRINKLER HEADS BENEATH OBSTRUCTION. PROVIDE ADDITIONAL PIPING AND FITTINGS AS REQUIRED.

CONTRACTORS AND SUBCONTRACTORS SHALL CAREFULLY REVIEW ALL CONSTRUCTION DOCUMENTS. INFORMATION REGARDING THE COMPLETE SCOPE OF WORK IS DISPERSED THROUGHOUT THE DOCUMENT SET AND CANNOT BE ACCURATELY DETERMINED WITHOUT REFERENCE TO THE COMPLETE DRAWING SET.

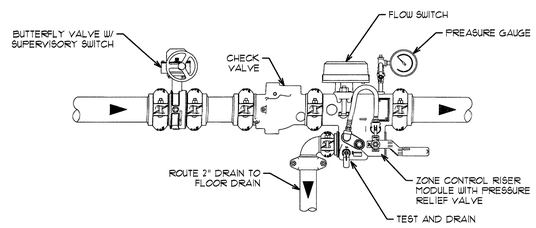

TYPICAL ZONE CONTROL DETAIL

4 NOT TO SCALE

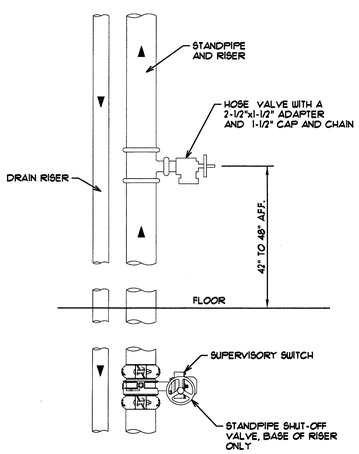

STANDPIPE DETAIL

3 NOT TO SCALE

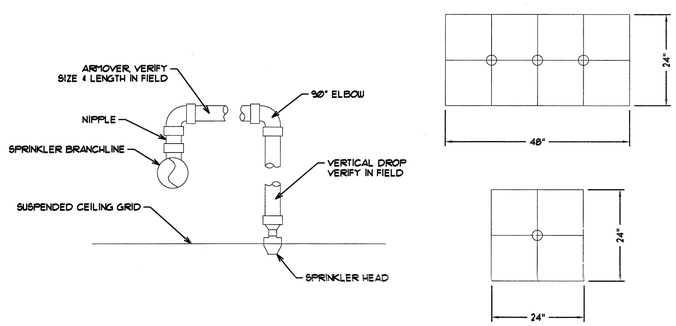

TYPICAL RETURN BEND ASSEMBLY - CENTER OF TILE

5 DIAGRAMMATIC

THE APPROXIMATE AVAILABLE FIRE FLOW FROM THE FLOW TEST OBTAINED FROM CITY OF MILWAUKEE FLOW TEST CONDUCTED 7/28/08 IS 71 PSI STATIC PRESSURE FLOWING AT 3860 GPM AT 67 PSI RESIDUAL. HYDRANT LOCATED AT THE SE CORNER OF 27TH ST. 1ST HYDRANT S/O OF W. WISCONSIN AVE. (FLOW HYDRANT #1), SWC OF W. WISCONSIN AVE. & N. 26TH ST. (FLOW HYDRANT #2) NEC OF W. WISCONSIN AVE. & N. 27TH ST. (RESIDUAL HYDRANT) THE FIRE PROTECTION CONTRACTOR SHALL CONDUCT A FLOW TEST FOR USE IN PREPARATION OF HYDRAULIC CALCULATIONS WITHIN 90 DAYS OF SUBMITTAL. THE FOLLOWING IS PROVIDED FOR REFERENCE ONLY.

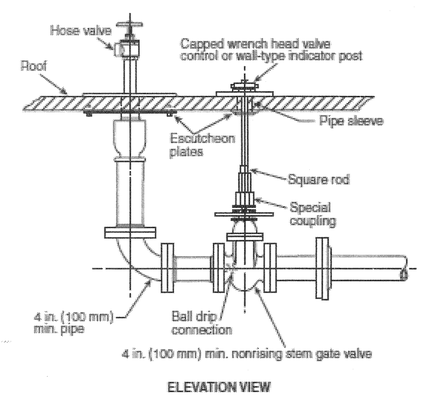

ROOF OUTLET PIPING ARRANGEMENT

6 NOT TO SCALE

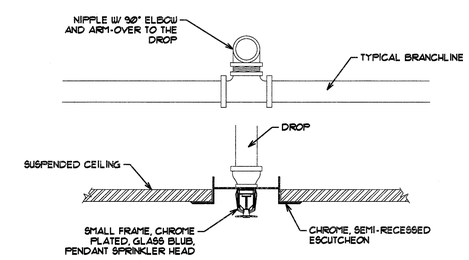

SPRINKLER HEAD WITH RECESSED ESCUTCHEON

7 DIAGRAMMATIC

City of Milwaukee
Department of Public Works
Buildings & Fleet Services

GRUMMAN/BUTKUS ASSOCIATES
Energy Efficiency Consultants and Sustainable Design Engineers
1011 North Mayfair Road, Suite 300
414 476.8980
Copyright © 2013 Grumman/Butkus Associates

MPD Police Evidence Warehouse
Fire Suppression
2620 W. Wisconsin Avenue
FIRE SUPRESSION DETAILS

REVISIONS

DESIGNED BY	JLF
DRAWN BY	JFC
CHECKED BY	JLF
DATE 11/22/13	SCALE NO SCALE
JOB NUMBER	PL120040120
SHEET NUMBER	FP-5
OF	

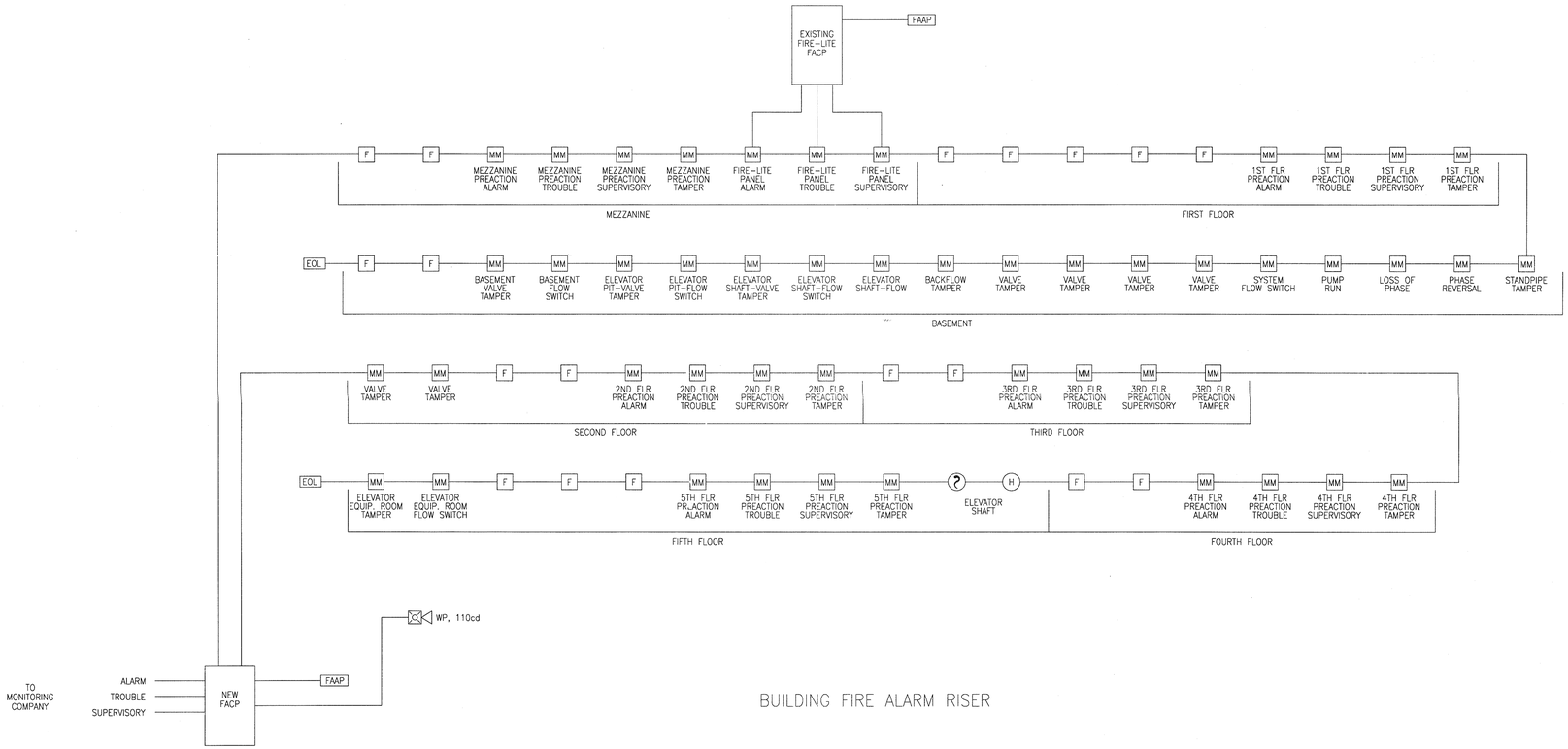

BUILDING FIRE ALARM RISER

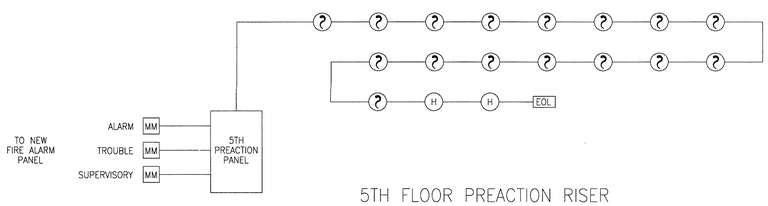

5TH FLOOR PREACTION RISER

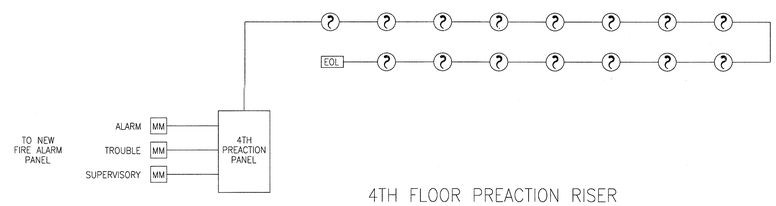

4TH FLOOR PREACTION RISER

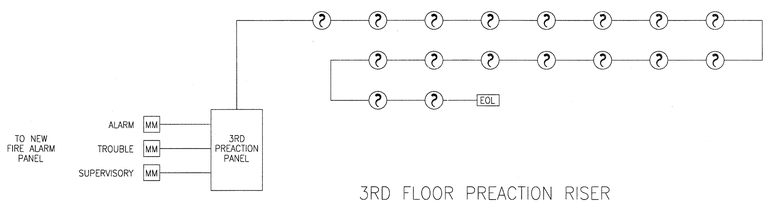

3RD FLOOR PREACTION RISER

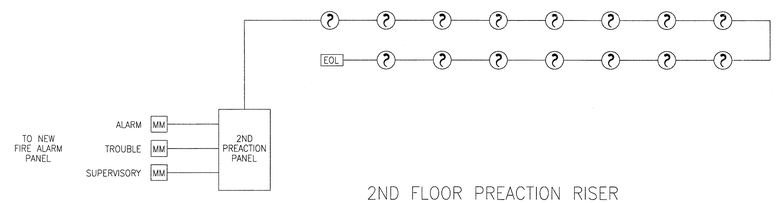

2ND FLOOR PREACTION RISER

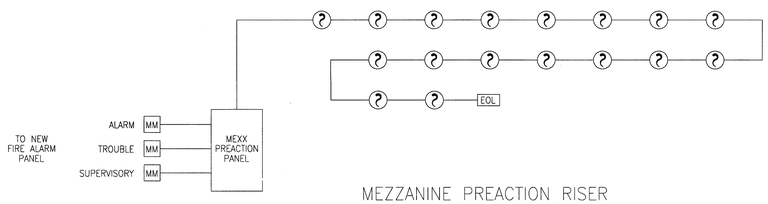

MEZZANINE PREACTION RISER

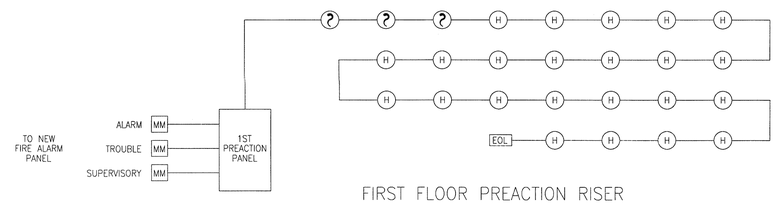

FIRST FLOOR PREACTION RISER

City of Milwaukee

Department of Public Works

Buildings & Fleet Services

GRUMMAN/BUTKUS ASSOCIATES

Energy Efficiency Consultants and Sustainable Design Engineers

1011 North Mayfair Road, Suite 300

414 476.8980

Copyright © 2013 Grumman/Butkus Associates

MPD Police Evidence Warehouse
Fire Suppression
2620 W. Wisconsin Avenue

FIRE ALARM RISER DIAGRAM

REVISIONS

DESIGNED BY	JLF
DRAWN BY	JFC
CHECKED BY	JLF
DATE 11/22/13	SCALE NO SCALE
JOB NUMBER	PL120040120
SHEET NUMBER	FP-6
OF	

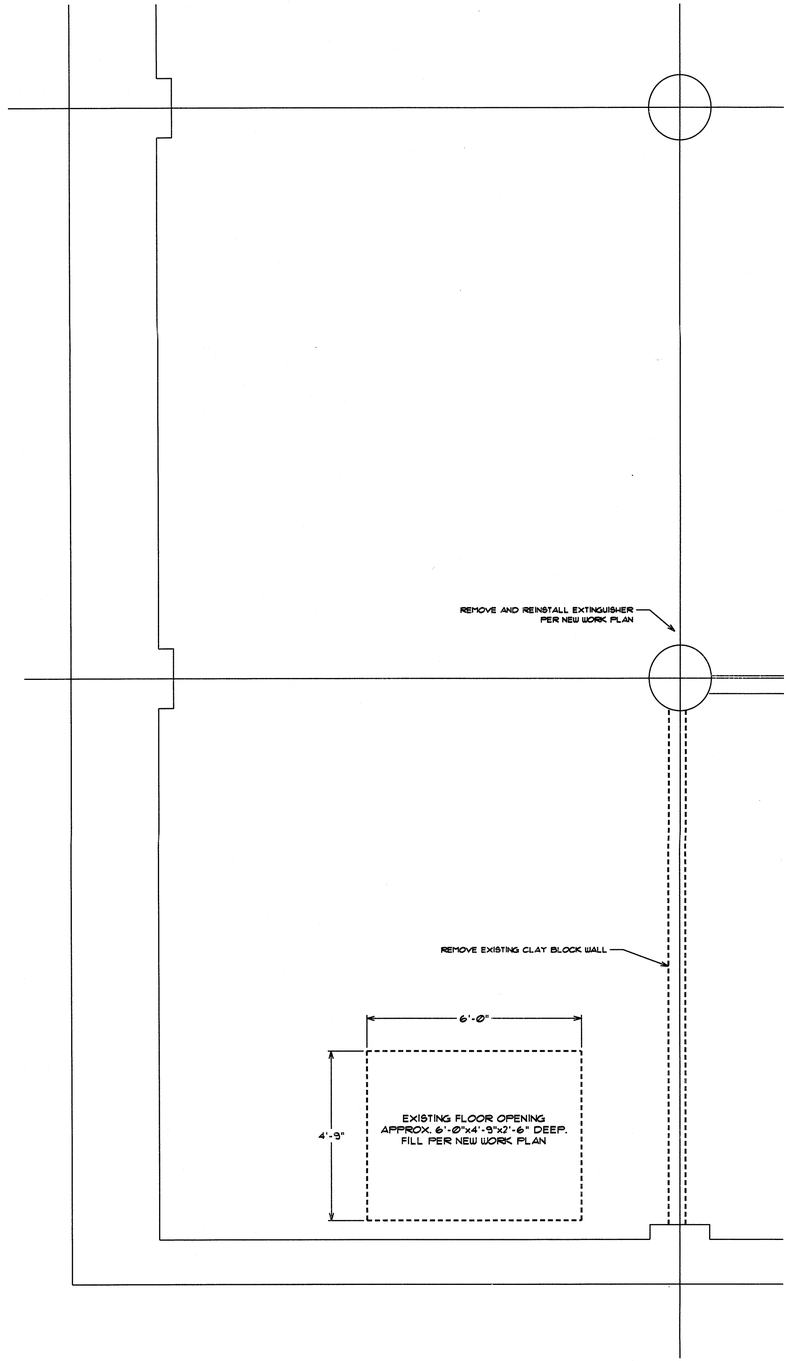

1 Partial Basement Plan - Demolition Plan

SCALE 1/2" = 1'-0"

NORTH

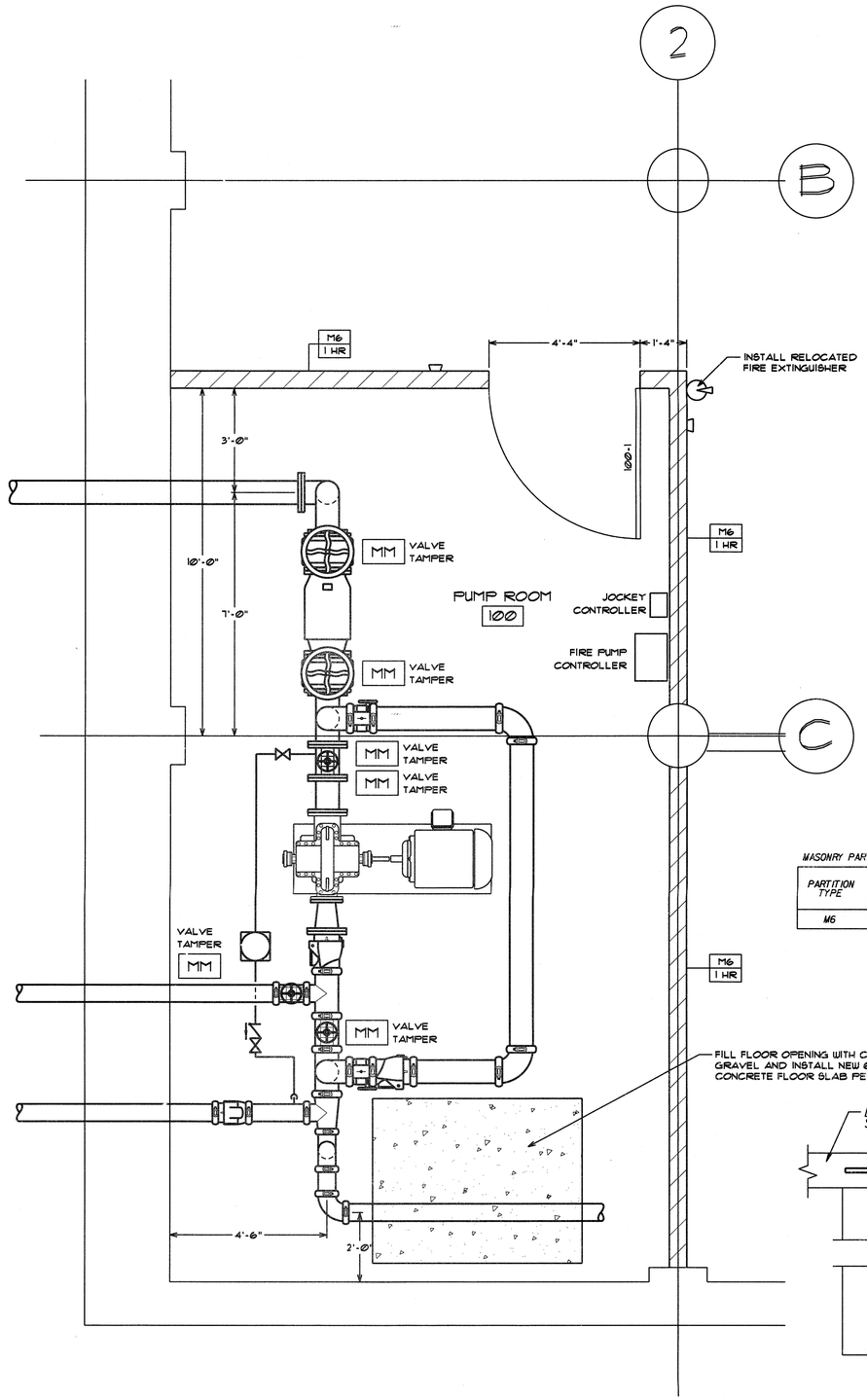

2 Partial Basement Plan - New Work Plan

SCALE 1/2" = 1'-0"

NORTH

GENERAL NOTES:

1. ROOM 100 EXISTING CAST IN PLACE CONCRETE CEILING CONTAINS NUMEROUS OPENINGS FROM REMOVALS OF OLD PIPING & CONDUITS. ALL EXISTING OPENINGS IN THIS ROOM ARE TO BE FILLED COMPLETELY WITH CONCRETE.

2. ROOM 100 EXISTING CEILING HEIGHT IS APPROX. 6' 8-1/2" HIGH.

3. ▽ LATERAL WALL SUPPORT AT TOP OF MASONRY WALL. REFER TO PARTITION TYPE M6 DETAIL.

DOOR SCHEDULE

DOOR 100-1 : HOLLOW METAL DOOR & FRAME
60 MINUTE FIRE RATING
PAINT DOOR AND FRAME
HARDWARE GROUP 1
DOOR WIDTH: 4'-0"
DOOR HEIGHT: APPROX. 6'-6"-FIELD VERIFY MAXIMUM FRAME HEIGHT ALLOWED.

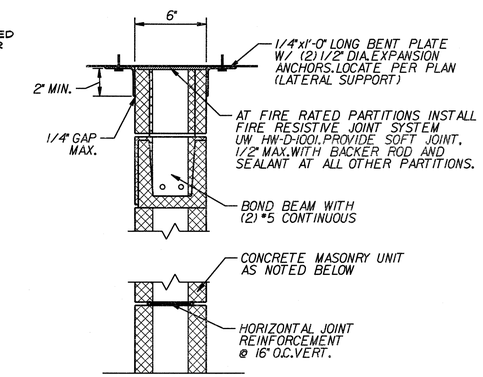

3 MASONRY PARTITON DETAIL

SCALE 2" = 1'-0"

MASONRY PARTITION SCHEDULE

PARTITION TYPE	BLOCK WIDTH	FIRE RESISTANCE		STC @ DENSITY 135 PCF			NOTES	AS DRAWN DIMENSION
		HOLLOW CORE	SOLID CORE	HOLLOW UNITS	GROUT FILLED	SAND FILLED		
M6	5-5/8"	1 HR, 2 HR	3 HR	47	54	52	UL #U906 - 2 HR	6"

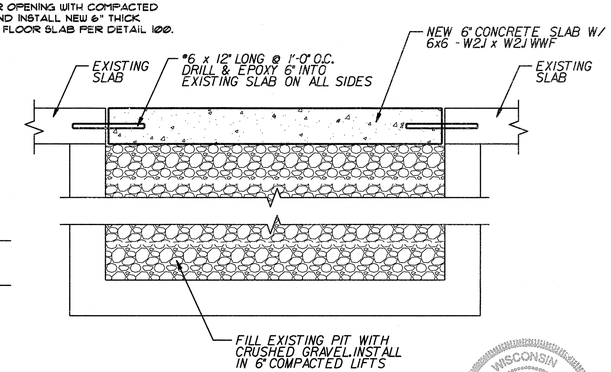

4 DETAIL 100

SCALE 1" = 1'-0"

WISCONSIN ROBERT M. BARR A7982 MILWAUKEE WI PROFESSIONAL ARCHITECT 11-22-13

City of Milwaukee
Department of Public Works
Buildings & Fleet Services

GRUMMAN/BUTKUS ASSOCIATES
Energy Efficiency Consultants and Sustainable Design Engineers
1011 North Mayfair Road, Suite 300
414 475.8880
Copyright © 2013 Grumman/Butkus Associates

MPD Police Evidence Warehouse
Fire Suppression
2620 W. Wisconsin Avenue
FLOOR PLANS & DETAILS
ARCHITECTURAL

REVISIONS

DESIGNED BY	RB
DRAWN BY	JFC
CHECKED BY	RB
DATE 11/22/13	SCALE AS NOTED
JOB NUMBER	PL120040120
SHEET NUMBER	AR-1
OF	

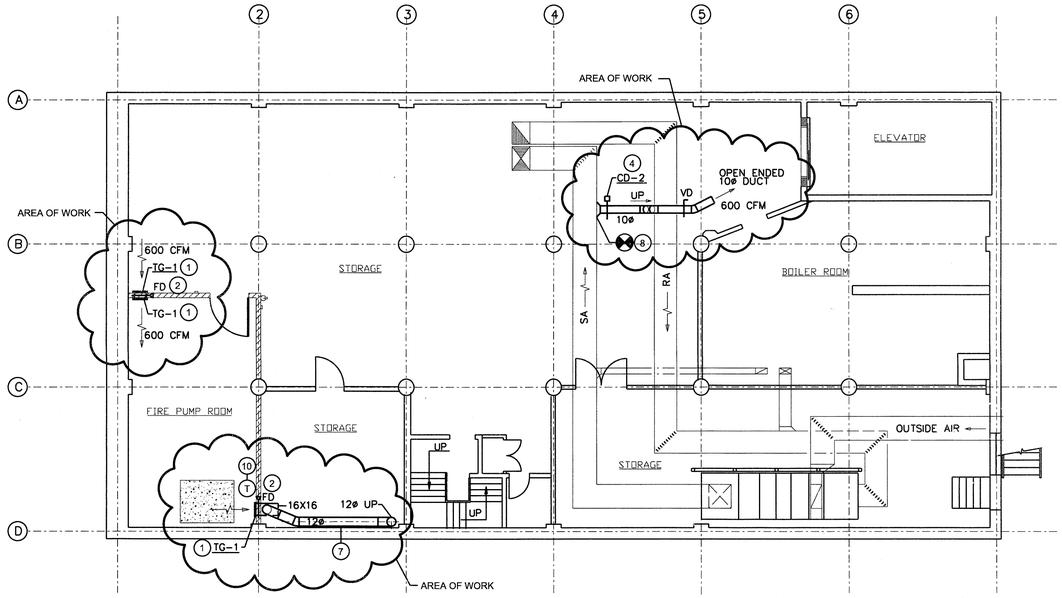

1 BASEMENT MECHANICAL PLAN

SCALE 1/8" = 1'-0"

NORTH

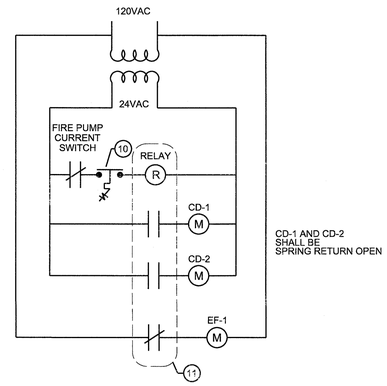

3 FIRE PUMP VENTILATION INTERLOCK

NO SCALE

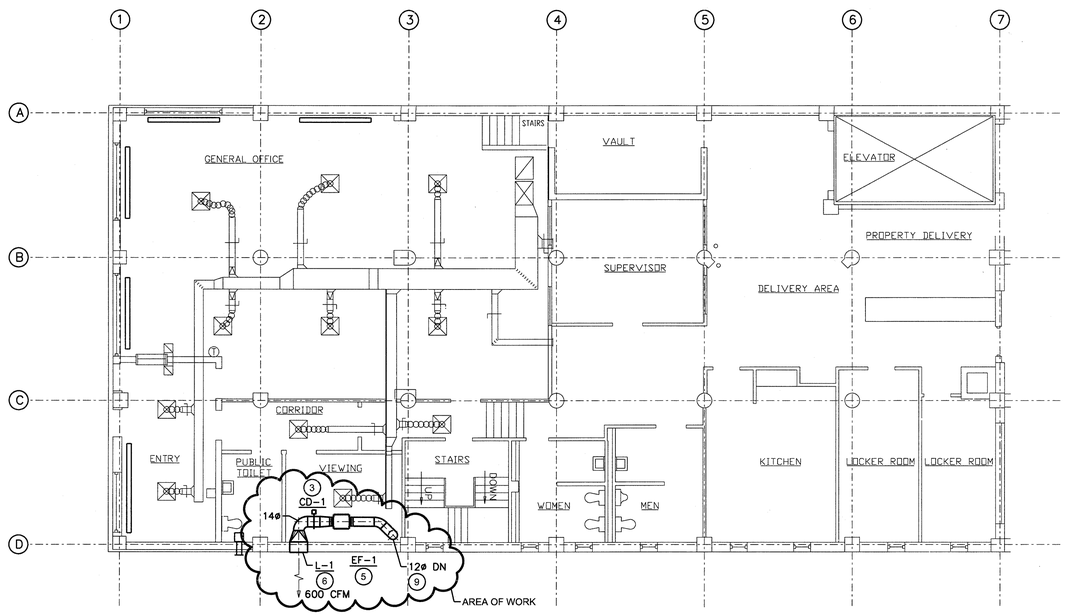

2 PARTIAL FIRST FLOOR MECHANICAL PLAN

SCALE 1/8" = 1'-0"

NORTH

ABBREVATIONS

CD	CONTROL DAMPER
CFM	CUBIC FEET MINUTE
EF	EXHAUST FAN
FD	FIRE DAMPER
L	LOUVER
OA	OUTSIDE AIR
RA	RETURN AIR
SA	SUPPLY AIR
TG	TRANSFER GRILLE
VD	VOLUME DAMPER

SYMBOLS

- AIR FLOW DIRECTION
- CONTROL DAMPER
- DUCT TRANSFER UP
- FIRE DAMPER 1-1/2 HR
- NEW TO EXISTING CONNECTION
- MANUAL VOLUME DAMPER
- THERMOSTAT

PLAN NOTES

1. TG-1 - TRANSFER GRILLE SHALL BE A TITUS MODEL 350 RL, 16X16. MOUNT GRILLE AT 4'-0" ABOVE FINISHED FLOOR. (TYP) OF 3.
2. FD (FIRE DAMPER) - RUSKIN MODEL D1BD2 (OR SIMILAR), STYLE B, 1-1/2 HR RATED, VERTICAL INSTALLATION, 16" X 16" DUCT CONNECTION, 16" X 18-3/4" OVERALL DIMENSION.
3. CD-1 - CONTROL DAMPER SHALL BE 14"Ø, PARALLEL BLADE, NORMALLY OPEN.
4. CD-2 - CONTROL DAMPER SHALL BE 10"Ø, PARALLEL BLADE, NORMALLY OPEN.
5. EF-1 - EXHAUST FAN - GREENHECK MODEL SQ 120 (OR SIMILAR), VARI-GREEN WITH 1/2 HP DIRECT DRIVE MOTOR. 600 CFM AT 0.625" W.G. 120 V, 1 PH POWER CONNECTION. FAN SHALL BE MOUNTED ABOVE EXISTING CEILING.
6. L-1 - EXHAUST LOUVER SHALL BE RUSKIN MODEL ELF375DX 24" X 12" (OR SIMILAR). LOUVER SHALL BE EXTRUDED ALUMINUM WITH DRAINABLE BLADE. MINUMUM FREE AREA SHALL BE .73 S.F. OR 55%. PROVIDE BIRD SCREEN.
7. ROUTE NEW DUCT BELOW STRUCTURE.
8. CONNECT NEW TO EXISTING USING A CONICAL FITTING. ROUTE ABOVE EXISTING RETURN AIR DUCT AND TERMINATE THRU OPEN ENDED DUCT WITH A WIRE MESH COVER.
9. 12"Ø VERTICAL DUCT SHALL BE EXPOSED IN ROOM. INSTALL AS CLOSE AS POSSIBLE TO EXISTING WALLS. CONTRACTOR SHALL CUT EXISTING CEILING TILE TO ACCOMODATE NEW DUCT AND PROVIDE ESCUTSION PLATE TO TILE ON ROOM SIDE OF DUCT.
10. PROVIDE THERMOSTAT TO WORK IN SERIES WITH FIRE PUMP CURRENT SENSOR. SET AT 80 DEG. F. (ADJ.). SEE DETAIL THIS SHEET FOR WIRING.
11. PROVIDE MOTOR RATED RELAY ASSEMBLY.

WISCONSIN HANS K. PLICHTA 32729 BROOKFIELD WI PROFESSIONAL ENGINEER

11/22/13

SHEET M-1 DIV. 15 SPECS

City of Milwaukee
Department of Public Works
Buildings & Fleet Services

GRUMMAN/BUTKUS ASSOCIATES
Energy Efficiency Consultants and Sustainable Design Engineers
1011 North Mayfair Road, Suite 300
414 476.8980
Copyright © 2013 Grumman/Butkus Associates

MPD Police Evidence Warehouse
Fire Suppression
2620 W. Wisconsin Avenue
PARTIAL PLANS
BSM'T & FIRST FLOOR – FIRE PUMP VENTILATION

REVISIONS

DESIGNED BY	HKP
DRAWN BY	RSC
CHECKED BY	HKP
DATE 11/22/13	SCALE 1/8"=1'-0"
JOB NUMBER	PL120040120
SHEET NUMBER	M-1
OF	1

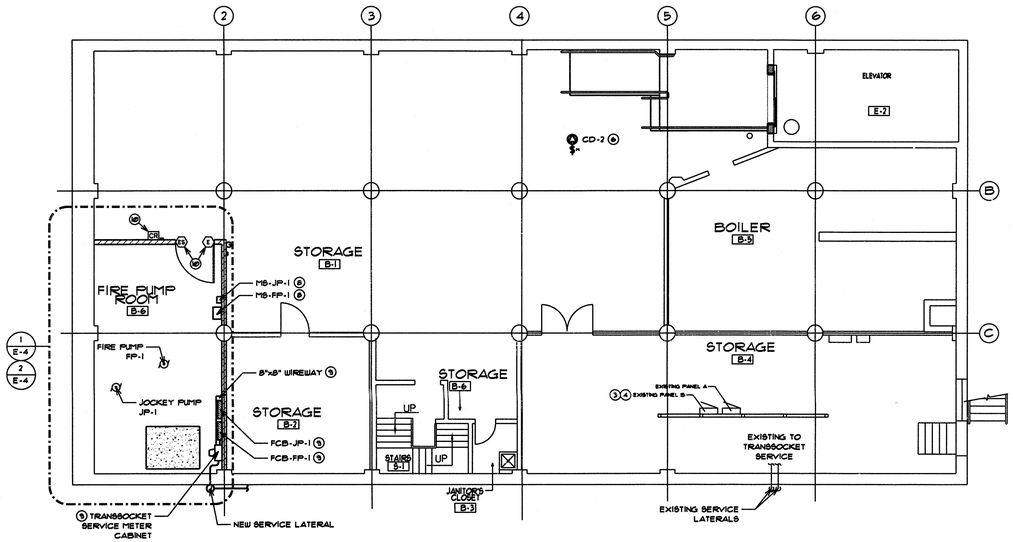

1 Basement Plan - Electrical Power

SCALE 1/8" = 1'-0"

NORTH

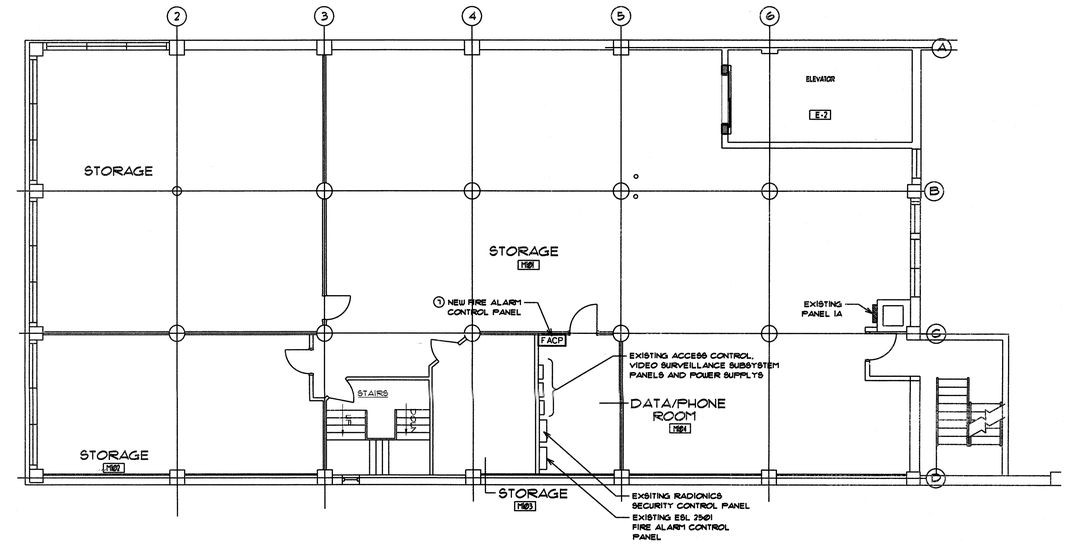

2 Mezzanine Plan - Electrical Power

SCALE 1/8" = 1'-0"

NORTH

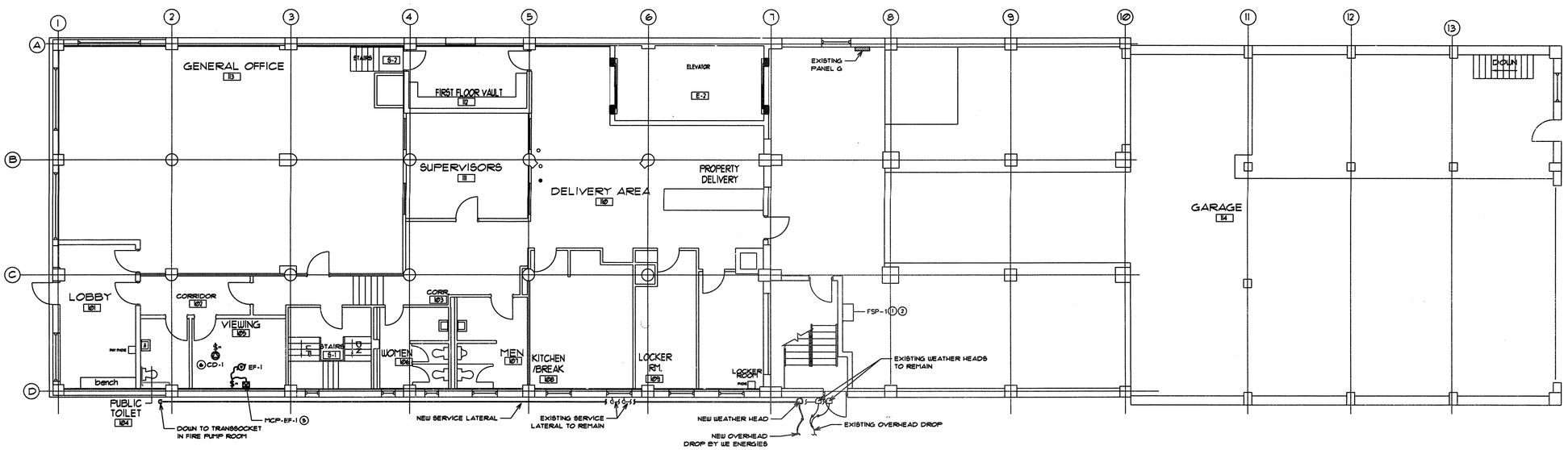

3 First Floor Plan - Electrical Power

SCALE 1/8" = 1'-0"

NORTH

GENERAL NOTES

1. THE ELECTRICAL INSTALLATION WITHIN THE FIRE PUMP ROOM SHALL BE SUITABLE FOR WET LOCATIONS. ALL ELECTRICAL RACEWAY SYSTEM SHALL BE SUITABLE FOR DAMP/WET ENVIRONMENTS. FURNISH BOXES AND OUTLET FITTING RATED NEMA 4.

2. PROVIDE AND INSTALL A SERVICE ENTRANCE GROUNDING TO MEET LOCAL AND NE CODE REQUIREMENTS. ROUTE GROUNDING ELECTRODE WIRING TO NEW GROUNDING TRIAD AND SERVICE WATER PIPING WITHIN FIRE PUMP ROOM. ALL GROUNDING ELECTRODE CONDUCTORS ROUTING WITHIN CONDUIT SHALL BE SCHEDULE 40 PVC RACEWAY.

3. COORDINATE ALL ELECTRICAL SERVICE EQUIPMENT AND INSTALLATION WITH ELECTRIC UTILITY WE ENERGIES.

4. ALL WORK WITHIN THE POLICE EVIDENCE WAREHOUSE SHALL BE PERFORMED WITH MILWAUKEE POLICE DEPARTMENT (MPD) SUPERVISION. THEREFORE, SCHEDULE ALL PLANNED WORK AS PER MPD APPROVALS.

5. EC SHALL INSTALL SELECT FIRE PROTECTION EQUIPMENT AND DEVICES FURNISHED BY THE FIRE PROTECTION SUPPLIER/CONTRACTOR AS DENOTED ON FIRE SUPPRESSION PLANS. COORDINATE ALL FIRE SUPPRESSION AND FIRE DETECTION WIRING REQUIREMENTS WITH GNERAL AND FIRE PROTECTION CONTRACTOR.

6. SEE HVAC SHEET M-1 FOR CONTROL WIRING REQUIREMENTS

7. SEE SHEET E-4 FOR ADDITIONAL LIGHTING AND RECEPTACLE WIRING WITH FIRE PUMP ROOM.

NOTES

1. PROVIDE A 120-VOLT BRANCH CIRCUIT TO SERVE NEW FIRE SUPPRESSION SYSTEM CONTROL PANEL FROM EXISTING FLOOR BRANCH PANEL "B". BRANCH POWER CIRCUIT SHALL CONSIST OF (2)#12/1#12 GND IN A 1/2-INCH RACEWAY.

2. ALTERNATE BID: PROVIDE A 120-VOLT BRANCH CIRCUIT TO SERVE NEW PREACTION CONTROL PANEL AND A CIRCUIT TO SERVE ASSOCIATED TANK MOUNTED AIR COMPRESSOR FROM EXISTING BRANCH PANEL "B". BRANCH CIRCUITS SHALL CONSIST OF (2)#12/1#12 GND IN A 1/2-INCH RACEWAY.

3. PROVIDE AND INSTALL A 20A, 120-VOLT, 1-POLE THERMAL MAGNETIC CIRCUIT BREAKER TO SERVE NEW FIRE SUPPRESSION CONTROL PANEL, OR (ALTERNATE BID) PANEL AND COMPRESSOR. ALL NEW CIRCUIT BREAKERS SHORT-CIRCUIT CURRENT RATING SHALL MATCH OR EXCEED THE EXISTING PANELBOARD SCCR.

4. USE EXISTING SPARE 20A, 120-VOLT, 1-POLE CIRCUIT BREAKER AT CIRCUIT NO. 25 TO SERVE NEW EXHAUST FAN EF-1 VIA MOTOR CONTROLLER MCP-EF-1 AS SHOWN ON SHEET M-1.

5. MOUNT MC FURNISHED MCP-EF-1 ON WALL ABOVE ACOUSTIC CEILING TILE. MCP-EF-1 SHALL BE FED FROM EXISTING PANEL "B" CONSISTING OF: (2)#12/1#12 GND IN A 1/2-INCH RACEWAY. EXTEND CIRCUIT TO EF-1 VIA MOTOR RATED TOGGLE SWITCH WITH OVERLOADS, LOCKABLE IN THE OFF POSITION.

6. WIRE DAMPER CONTROL WIRING FROM DAMPER TO MCP-EF-1 TO BE INTERLOCKED WITH EF-1 CONTROLS AS INDICATED ON SHEET M-1. CONTROL WIRING SHALL CONSIST OF (2)#14/1#14 GND IN A 1/2-INCH RACEWAY AS REQUIRED.

7. PROVIDE A 20A, 120-VOLT, 1-PHASE CIRCUIT TO SERVE NEW FACP. CIRCUIT SHALL CONSIST OF (2)#12/1#12 GND IN A 1/2-INCH RACEWAY FROM PANELBOARD "B" LOCATED IN BASEMENT ELECTRICAL ROOM. USE EXISTING SPARE 20A CIRCUIT BREAKER AT CIRCUIT POLE 35 TO SERVE NEW FACP.

8. INSTALL NEW FIRE AND JOCKEY PUMP CONTROLLER ON WALL AS DIRECTED BY FIRE SUPPRESSION CONTRACTOR. SEE SHEET E-5 FOR ADDITIONAL WIRING AND INSTALLATION REQUIREMENTS.

9. FIRE PUMP NEW ELECTRICAL SERVICE EQUIPMENT INCLUDING SERVICE TRANSSOCKET METER, MAIN BREAKER, WIREWAY AND JOCKEY PUMP ENCLOSED FEEDER BREAKER SHALL BE WALL MOUNTED. ENCLOSED MAIN AND JOCKEY PUMP CIRCUIT BREAKER(S) SHALL BE FURNISHED WITH EXTERNAL DISCONNECT SWITCH MECHANISM LOCKABLE IN THE ON POSITION.

10. ACCESS CONTROL DEVICES SHALL MATCH OR BE COMPATIBLE WITH EXISTING ACCESS CONTROL SYSTEM. COORDINATE WITH DOOR MANUFACTURER/SUPPLIER ON ELECTRIC STRIKE LATCH AND DOOR CONTACT LOCATION AND HARDWARE. MOUNT CARD READER 48-INCHES ABOVE FINISH FLOOR. PROVIDE DEVICE WIRING IN RACEWAY TO EXISTING ACCESS CONTROL EQUIPMENT IN DATA/PHONE ROOM M-104 ON MEZZANINE FLOOR.

SECURITY SYSTEM DEVICE LEGEND

CR	CARD READER
ES	ELECTRIC DOOR STRIKE
E	DOOR CONTACT

ELECTRICAL SYMBOLS LEGEND

	EQUIPMENT MOTOR
	DEVICE CONNECTION POINT
	PANELBOARD
	DUPLEX RECEPTACLE
$	TOGGLE SWITCH
$M	MANUAL MOTOR STARTER TOGGLE SWITCH TYPE (WITH OVERLOADS)
	MOTOR STARTER OR CONTROLLER
	INTERIOR PAGING SPEAKER, SURFACE MOUNTED
S H	FIRE ALARM SMOKE OR HEAT DETECTOR (SEE FIRE PROTECTION DRAWINGS)

WISCONSIN KAREN J. LONG 42811-6 WAUWATOSA, WI PROFESSIONAL ENGINEER

11/22/13

City of Milwaukee
Department of Public Works
Buildings & Fleet Services

GRUMMAN/BUTKUS ASSOCIATES
Energy Efficiency Consultants and Sustainable Design Engineers
1011 North Mayfair Road, Suite 300
414 476.8980
Copyright © 2013 Grumman/Butkus Associates

MPD Police Evidence Warehouse
Fire Suppression
2620 W. Wisconsin Avenue
FLOOR PLANS
ELECTRICAL POWER

REVISIONS

DESIGNED BY	BMW
DRAWN BY	JFC
CHECKED BY	BMW
DATE 11/22/13	SCALE 1/8"=1'-0"
JOB NUMBER	PL120040120
SHEET NUMBER	E-1
OF	

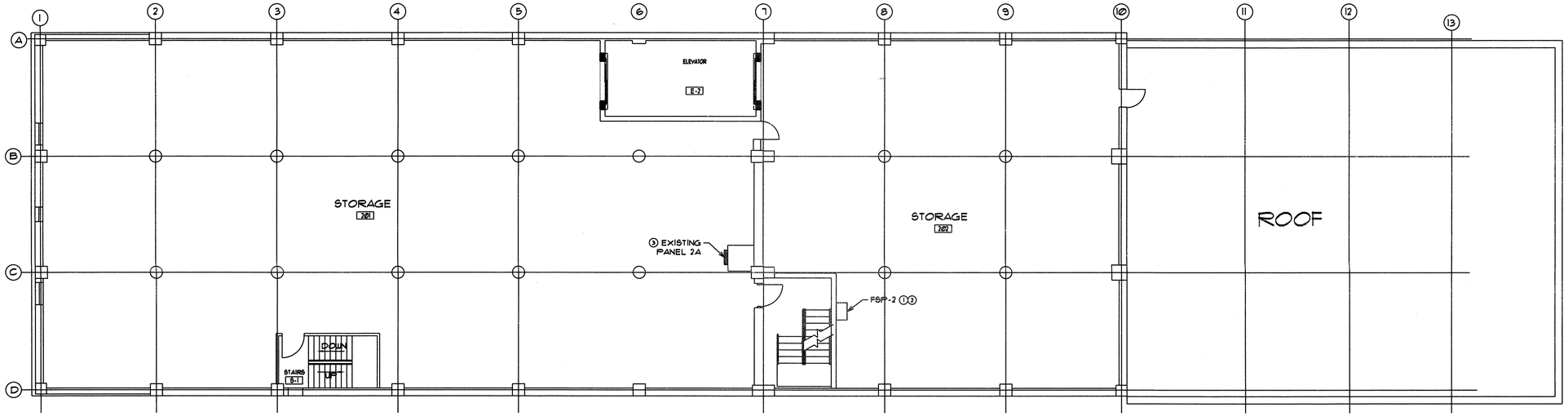

1 Second Floor Plan - Electrical Power

SCALE 1/8" = 1'-0"

NORTH

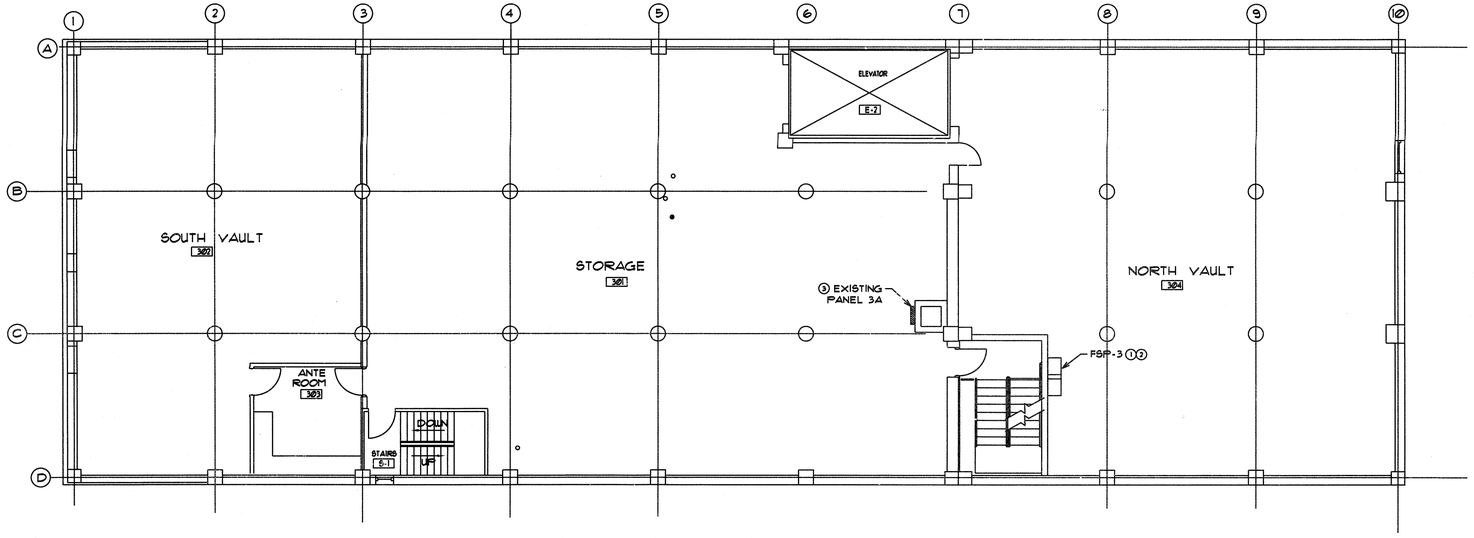

2 Third Floor Plan - Electrical Power

SCALE 1/8" = 1'-0"

NORTH

NOTES

① PROVIDE A 120-VOLT BRANCH CIRCUIT TO SERVE NEW FIRE SUPPRESSION SYSTEM CONTROL PANEL FROM EXISTING FLOOR BRANCH PANEL "XA". CIRCUIT SHALL CONSIST OF (2)#12/1#12 GND IN A 1/2-INCH RACEWAY. (WHERE X=FLOOR NUMBER)

② ALTERNATE BID: PROVIDE A 120-VOLT BRANCH CIRCUIT TO SERVE NEW PREACTION CONTROL PANEL AND A CIRCUIT TO SERVE ASSOCIATED TANK MOUNTED AIR COMPRESSOR FROM EXISTING BRANCH PANEL "XA". CIRCUITS SHALL CONSIST OF (2)#12/1#12 GND IN A 1/2-INCH RACEWAY. (WHERE X=FLOOR NUMBER)

③ PROVIDE AND INSTALL A 20A, 120-VOLT, 1-POLE THERMAL MAGNETIC CIRCUIT BREAKER TO SERVE NEW FIRE SUPPRESSION CONTROL PANEL OR (ALTERNATE BID) PANEL AND COMPRESSOR. CIRCUIT BREAKERS SHORT-CIRCUIT CURRENT RATING SHALL MATCH OR EXCEED THE EXISTING PANELBOARD SCCR.

WISCONSIN KAREN J. LONG 42811-6 WAUWATOSA, WI PROFESSIONAL ENGINEER

11/22/2013

City of Milwaukee
Department of Public Works
Buildings & Fleet Services

GRUMMAN/BUTKUS ASSOCIATES
Energy Efficiency Consultants and Sustainable Design Engineers
1011 North Mayfair Road, Suite 300
414 476.8980

Copyright © 2013 Grumman/Butkus Associates

MPD Police Evidence Warehouse
Fire Suppression
2620 W. Wisconsin Avenue
FLOOR PLANS
ELECTRICAL POWER

REVISIONS

DESIGNED BY	BMW
DRAWN BY	JFC
CHECKED BY	BMW
DATE 11/22/13	SCALE 1/8"=1'-0"
JOB NUMBER	PL120040120
SHEET NUMBER	E-2
OF	

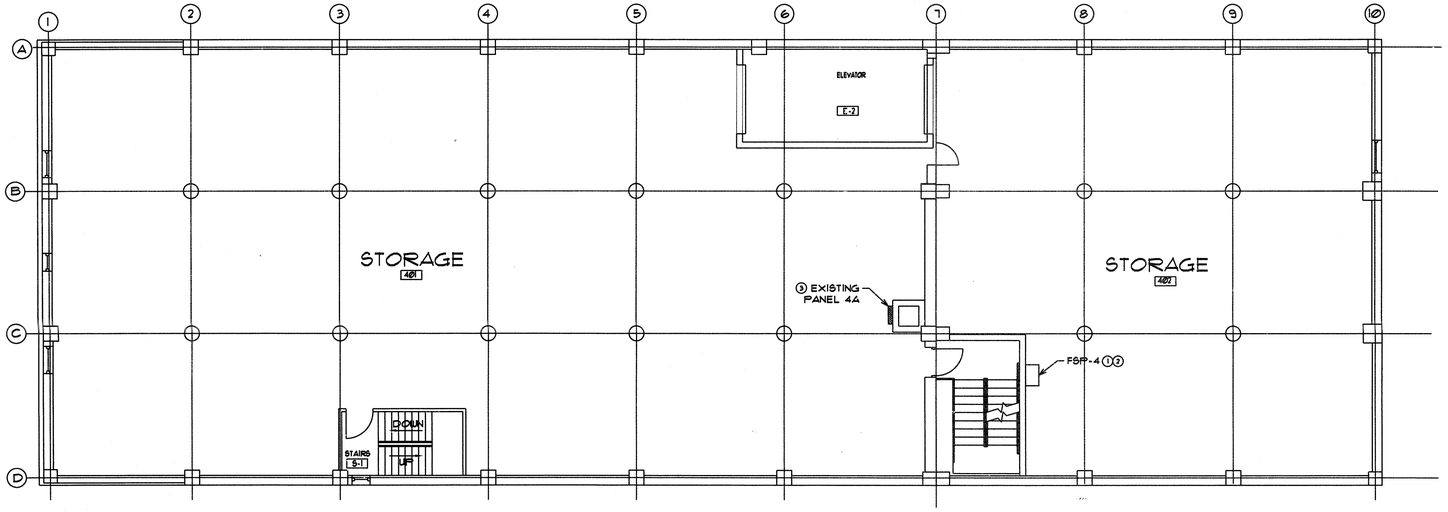

1 Fourth Floor Plan - Electrical Power
SCALE 1/8" = 1'-0"

NORTH

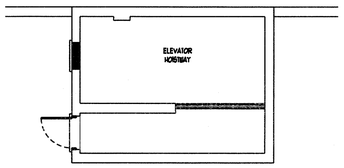

3 Elevator Room Roof Level Plan Electrical Power
SCALE 1/8" = 1'-0"

NORTH

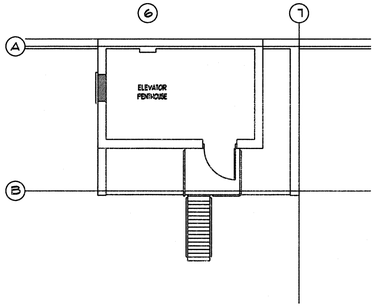

4 Elevator Room Penthouse Level Plan Electrical Power
SCALE 1/8" = 1'-0"

NORTH

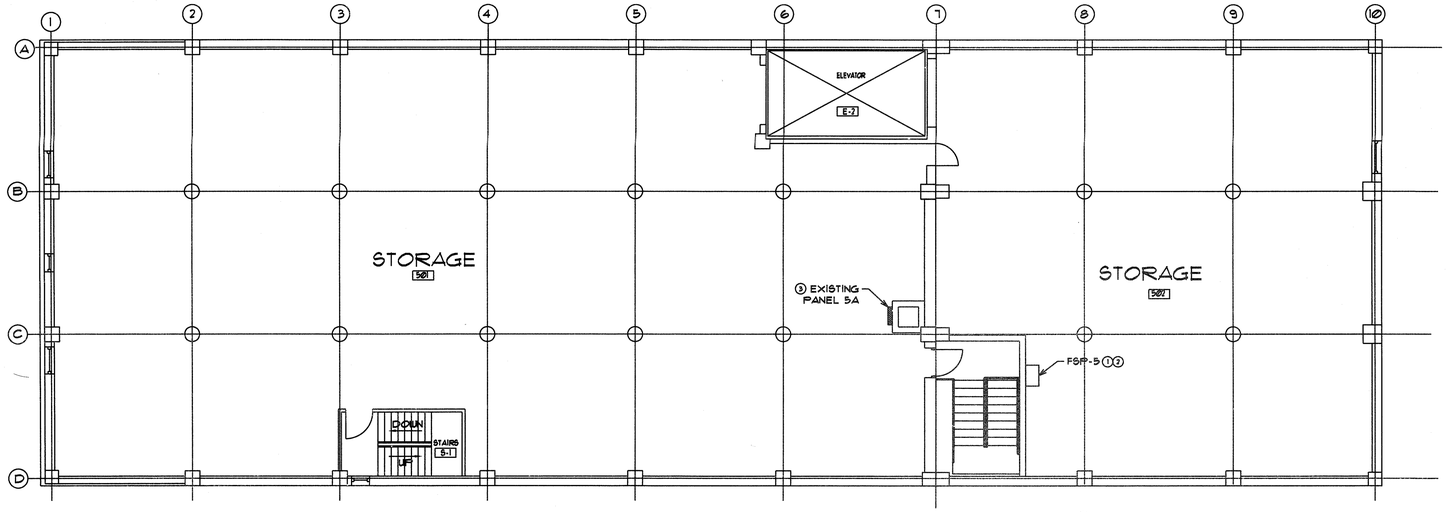

2 Fifth Floor Plan - Electrical Power
SCALE 1/8" = 1'-0"

NORTH

NOTES

① PROVIDE A 120-VOLT BRANCH CIRCUIT TO SERVE NEW FIRE SUPPRESSION SYSTEM CONTROL PANEL FROM EXISTING FLOOR BRANCH PANEL "XA". CIRCUIT SHALL CONSIST OF (2)#12/(1)#12 GND IN A 1/2-INCH RACEWAY. (WHERE X=FLOOR NUMBER)

② ALTERNATE BID: PROVIDE A 120-VOLT BRANCH CIRCUIT TO SERVE NEW PREACTION CONTROL PANEL AND A CIRCUIT TO SERVE ASSOCIATED TANK MOUNTED AIR COMPRESSOR FROM EXISTING BRANCH PANEL "XA". CIRCUITS SHALL CONSIST OF (2)#12/(1)#12 GND IN A 1/2-INCH RACEWAY. (WHERE X=FLOOR NUMBER)

③ PROVIDE AND INSTALL A 20A, 120-VOLT, 1-POLE THERMAL MAGNETIC CIRCUIT BREAKER TO SERVE NEW FIRE SUPPRESSION CONTROL PANEL. OR (ALTERNATE BID) PANEL AND COMPRESSOR. CIRCUIT BREAKERS SHORT-CIRCUIT CURRENT RATING SHALL MATCH OR EXCEED THE EXISTING PANELBOARD SCCR.

WISCONSIN
KAREN J. LONG
42811-6
WAUWATOSA, WI
PROFESSIONAL ENGINEER
11/22/13

City of Milwaukee
Department of Public Works
Buildings & Fleet Services

GRUMMAN/BUTKUS ASSOCIATES
Energy Efficiency Consultants and Sustainable Design Engineers
1011 North Mayfair Road, Suite 300
414 476.8980
Copyright © 2013 Grumman/Butkus Associates

MPD Police Evidence Warehouse
Fire Suppression
2620 W. Wisconsin Avenue
FLOOR PLANS
ELECTRICAL POWER

REVISIONS

DESIGNED BY	BMW
DRAWN BY	JFC
CHECKED BY	BMW
DATE 11/22/13	SCALE 1/8"=1'-0"
JOB NUMBER	PL120040120
SHEET NUMBER	E-3
OF	

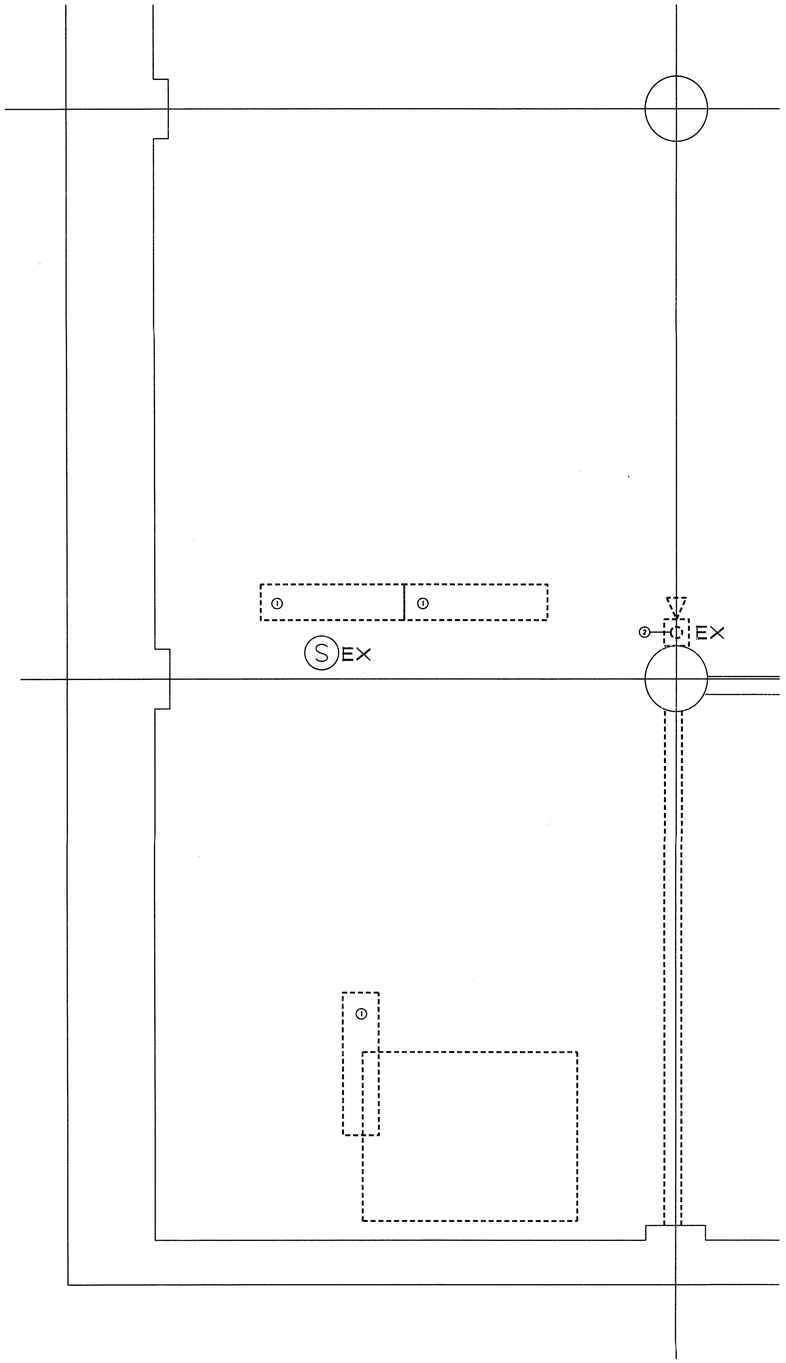

1 Partial Basement Plan - Lighting Demolition Plan

SCALE 1/2" = 1'-0"

NORTH

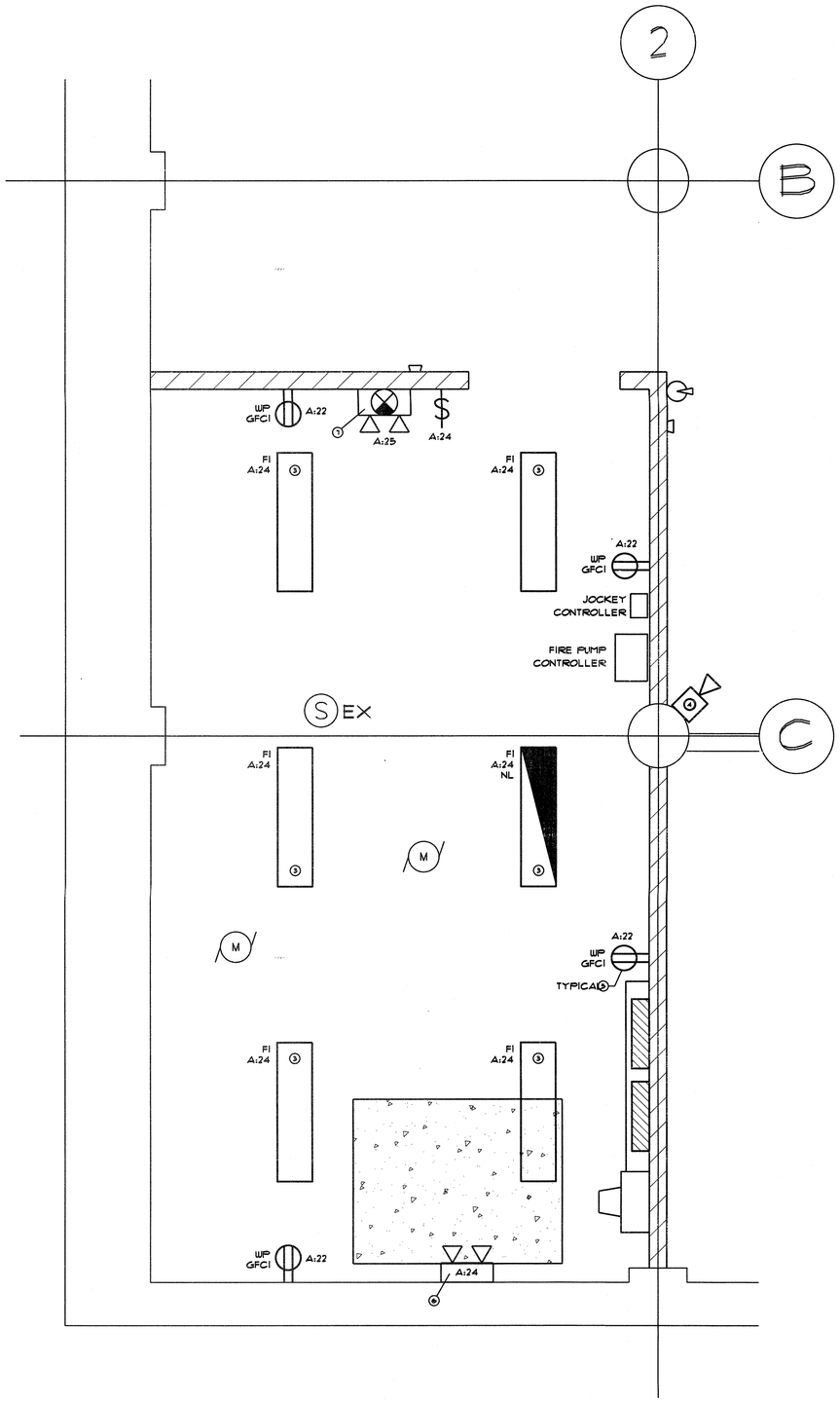

2 Partial Basement Plan - Lighting Plan

SCALE 1/2" = 1'-0"

NORTH

GENERAL NOTES

1. THE ELECTRICAL INSTALLATION WITHIN THE FIRE PUMP ROOM SHALL BE SUITABLE FOR WET LOCATIONS. ALL ELECTRICAL RACEWAY SYSTEM SHALL BE SUITABLE FOR DAMP/WET ENVIRONMENTS. FURNISH BOXES AND OUTLET FITTING RATED NEMA 4.

2. PROVIDE AND INSTALL A SERVICE ENTRANCE GROUNDING TO MEET LOCAL AND NE CODE REQUIREMENTS. ROUTE GROUNDING ELECTRODE WIRING TO NEW GROUNDING TRIAD AND SERVICE WATER PIPING WITHIN FIRE PUMP ROOM. ALL GROUNDING ELECTRODE CONDUCTORS ROUTING WITHIN CONDUIT SHALL BE SCHEDULE 40 PVC RACEWAY.

3. COORDINATE ALL ELECTRICAL SERVICE EQUIPMENT AND INSTALLATION WITH ELECTRIC UTILITY WE ENERGIES.

4. ALL WORK WITHIN THE POLICE EVIDENCE WAREHOUSE SHALL BE PERFORMED WITH MILWAUKEE POLICE DEPARTMENT (MPD) SUPERVISION. THEREFORE, SCHEDULE ALL PLANNED WORK AS PER MPD APPROVALS.

5. EC SHALL INSTALL SELECT FIRE PROTECTION EQUIPMENT AND DEVICES FURNISHED BY THE FIRE PROTECTION SUPPLIER/CONTRACTOR AS DENOTED ON FIRE SUPPRESSION PLANS. COORDINATE ALL FIRE SUPPRESSION AND FIRE DETECTION WIRING REQUIREMENTS WITH GNERAL AND FIRE PROTECTION CONTRACTOR.

6. SEE HVAC SHEET M-1 FOR CONTROL WIRING REQUIREMENTS

7. SEE SHEET E-1 FOR ADDITIONAL POWER WIRING WITHIN FIRE PUMP ROOM.

8. ALL RECEPTACLE MOUNTING HEIGHTS SHALL BE 48-INCHES ABOVE FINISHED FLOOR. LIGHT WALL SWITCH SHALL BE MOUNTED 54-INCHES ABOVE FINISHED FLOOR.

9. SEE PANEL A ON SHEET E-1 FOR LOCATION AND SHEET E-5 FOR PANEL SCHEDULE.

NOTES

1. DISCONNECT AND REMOVE EXISTING CEILING MOUNTED FLUORESCENT LIGHT FIXTURES AND SAVAGE TO BE TURN OVER TO MPD FOR FUTURE USE. REMOVE EXISTING CIRCUIT/RACEWAY BACK TO NEAREST JUNCTION BOX OR LIGHT FIXTURE TO MAINTAIN CIRCUIT CONTINUITY.
2. REMOVE EXISTING SOUND PAGING HORN SPEAKER TO BE RELOCATED AS SHOWN ON NEW WORK PLAN. MAINTAIN EXISTING SPEAKER MOUNTING HARDWARE TO BE REUSED AT NEW LOCATION.
3. FLUSH MOUNT LIGHT FIXTURES ON CEILING. ADJUST FIXTURE LOCATION TO MISS EXISTING PIPING OR OTHER OBSTRUCTIONS WHERE NECESSARY PER ENGINEER'S/OWNER APPROVAL.
4. REINSTALL EXISTING SOUND PAGING SPEAKER ON CEILING USING EXISTING MOUNTING AND NEW ANCHOR HARDWARE.
5. ALL RECEPTACLES SHALL BE FURNISHED TO BE INSTALLED IN CAST METALLIC DEVICE BOX WITH WEATHERPROOF IN-USE COVERS.
6. EMERGENCY BATTERY PACK LIGHTS SHALL BE WALL MOUNTED JUST 2-INCHES BELOW CEILING.
7. EXIT LIGHT SHALL BE CEILING MOUNTED ADJACENT TO EMERGENCY BATTERY PACK LIGHT FIXTURE.

SECURITY SYSTEM DEVICE LEGEND

CR	CARD READER
ES	ELECTRIC DOOR STRIKE
E	DOOR CONTACT

ELECTRICAL SYMBOLS LEGEND

M	EQUIPMENT MOTOR
	DEVICE CONNECTION POINT
	PANELBOARD
	DUPLEX RECEPTACLE
$	TOGGLE SWITCH
$ M	MANUAL MOTOR STARTER TOGGLE SWITCH TYPE (WITH OVERLOADS)
	MOTOR STARTER OR CONTROLLER
	INTERIOR PAGING SPEAKER, SURFACE MOUNTED
S H	FIRE ALARM SMOKE OR HEAT DETECTOR (SEE FIRE PROTECTION DRAWINGS)
	EXIT LIGHT

WISCONSIN KAREN J. LONG 42811-6 WAUWATOSA, WI PROFESSIONAL ENGINEER

11/22/2013

City of Milwaukee

Department of Public Works

Buildings & Fleet Services

GRUMMAN /BUTKUS ASSOCIATES

Energy Efficiency Consultants and Sustainable Design Engineers

1011 North Mayfair Road, Suite 300

414 476.8980

Copyright © 2013 Grumman/Butkus Associates

MPD Police Evidence Warehouse
Fire Suppression
2620 W. Wisconsin Avenue
FLOOR PLANS
ELECTRICAL LIGHTING

REVISIONS

DESIGNED BY BMW

DRAWN BY JFC

CHECKED BY BMW

DATE 11/22/13

SCALE 1/2" = 1'-0"

JOB NUMBER PL120040120

SHEET NUMBER E-4

OF

PANEL: LP-A — NEW WORK

NEW OR EXISTING: EXISTING
LOCATION : BASEMENT LEVEL
MOUNTING : SURFACE
ENCLOSURE: NEMA 1
ENTRANCE: TOP

VOLTAGE/PHASE : 120/208V, 3Ø, 4W
BUS AMPS : 225A
MAIN BREAKER : 225A
FED FROM : WIREWAY TAP

NEUTRAL BUS: 100%
GROUND BUS: YES- BOLTED
ISO. GRND. BUS: NONE
FULLY RATED AIC: 10,000
TVSS: NONE

LOAD DESCRIPTION	LOAD TYPE	NOTE	VOLT-AMPS A	VOLT-AMPS B	VOLT-AMPS C	CKT	BKR/ POLE	A B C	BKR/ POLE	CKT	VOLT-AMPS A	VOLT-AMPS B	VOLT-AMPS C	NOTE	LOAD TYPE	LOAD DESCRIPTION
EQUIP RM - Lights		1	0			1	20/0	* - -	20/1	2	0			1		Bath Rms/Vault/Stairs - Lts
STAIR - Lights		1		0		3	20/1	- * -	20/1	4		0		1		Kitchen/Hall - Receps
BOILER RM - Lights		1			0	5	15/1	- - *	20/1	6			0	1		Bath Rms GFCI - Lts
BASEMENT - Lights		1	0			7	15/1	* - -	20/1	8	0			1		Kitchen/Locker Rm - Lights
BASEMENT - Lights		1		0		9	15/1	- * -	20/1	10		0		1		Delivery Area - Lights
BOILER RM - Circ Pump		1			0	11	20/2	- - *	20/1	12			0	1		Delivery Area - Receps
		1	0			13		* - -	20/1	14	0			1		Kitchen - Garbage Disposal
Boiler Control Circuit		1		0		15	15/1	- * -	20/1	16		0		1		Kitchen - Counter Receps
Main Off - East Wall Recp		1			0	17	20/1	- - *	20/1	18			0	1		Kitchen - Counter Receps
Harp & Flag Pole - Lights		1	0			19	20/1	* - -	20/1	20	0			1		Kitchen - North wall Receps
Boiler #2 Makeup Air		1		0		21	20/1	- * -	15/1	22		0		1		**Fire Pump Rm - Receps**
Space		1			0	23	20/1	- - *	15/1	24			0	1		**Fire Pump Rm - Lights**
ROOF TOP AC		1	0			25	60/3	* - -	50/2	26	0			1		
		1		0		27		- * -		28		0		1		
		1			0	29		- - *		30			0	1		Boiler #1 & Tracer
AHU-1		1	0			31	20/3	* - -	20/3	32	0			1		
		1		0		33		- * -		34		0		1		Circ Pump #1 & 2
		1			0	35		- - *		36			0	1		
GARAGE PANELBOARD		1	0			37	60/3	* - -	20/3	38	0			1		
		1		0		39		- * -		40		0		1		Circ Pump #3 & 4
		1			0	41		- - *		42			0	1		

BREAKER NOTES
1) Thermal Magnetic
2) Shunt trip
3) Lock-out device
4) GFEP
5) GFIC
6) AFCI
7) Aux Switches
8) HACR
9) Existing Breaker

CONNECTED PHASE LOADS
TOTAL ØA = 0 VA
TOTAL ØB = 0 VA
TOTAL ØC = 0 VA

LOAD TYPES	Connected	Demand
Lighting (L) =	0	0
Receptacles (R)=	0	0
Motors (M)=	0	0
Electric Heating (H) =	0	0
Equipment (E) =	0	0
Panels (P) =	0	0
Spare (S) =	0	0
Space (X) =	0	0
Total VA =	0	0
Total Amps =	**0.0**	**0.0**

PANEL: LP-A — DEMO WORK

NEW OR EXISTING: EXISTING
LOCATION : BASEMENT LEVEL
MOUNTING : SURFACE
ENCLOSURE: NEMA 1
ENTRANCE: TOP

VOLTAGE/PHASE : 120/208V, 3Ø, 4W
BUS AMPS : 225A
MAIN BREAKER : 225A
FED FROM : WIREWAY TAP

NEUTRAL BUS: 100%
GROUND BUS: YES- BOLTED
ISO. GRND. BUS: NONE
FULLY RATED AIC: 10,000
TVSS: NONE

LOAD DESCRIPTION	LOAD TYPE	NOTE	VOLT-AMPS A	VOLT-AMPS B	VOLT-AMPS C	CKT	BKR/ POLE	A B C	BKR/ POLE	CKT	VOLT-AMPS A	VOLT-AMPS B	VOLT-AMPS C	NOTE	LOAD TYPE	LOAD DESCRIPTION
EQUIP RM - Lights		1	0			1	20/0	* - -	20/1	2	0			1		Bath Rms/Vault/Stairs - Lts
STAIR - Lights		1		0		3	20/1	- * -	20/1	4		0		1		Kitchen/Hall - Receps
BOILER RM - Lights		1			0	5	15/1	- - *	20/1	6			0	1		Bath Rms GFCI - Lts
BASEMENT - Lights		1	0			7	15/1	* - -	20/1	8	0			1		Kitchen/Locker Rm - Lights
BASEMENT - Lights		1		0		9	15/1	- * -	20/1	10		0		1		Delivery Area - Lights
BOILER RM - Circ Pump		1			0	11	20/2	- - *	20/1	12			0	1		Delivery Area - Receps
		1	0			13		* - -	20/1	14	0			1		Kitchen - Garbage Disposal
Boiler Control Circuit		1		0		15	15/1	- * -	20/1	16		0		1		Kitchen - Counter Receps
Main Off - East Wall Recp		1			0	17	20/1	- - *	20/1	18			0	1		Kitchen - Counter Receps
Harp & Flag Pole - Lights		1	0			19	20/1	* - -	20/1	20	0			1		Kitchen - North wall Receps
Boiler #2 Makeup Air		1		0		21	20/1	- * -	15/1	22		0		1		**Elevator Pit - Lts & Alarm**
Space		1			0	23	20/1	- - *	15/1	24			0	1		**Elevator Pit - Sump Pump**
ROOF TOP AC		1	0			25	60/3	* - -	50/2	26	0			1		
		1		0		27		- * -		28		0		1		
		1			0	29		- - *		30			0	1		Boiler #1 & Tracer
AHU-1		1	0			31	20/3	* - -	20/3	32	0			1		
		1		0		33		- * -		34		0		1		Circ Pump #1 & 2
		1			0	35		- - *		36			0	1		
GARAGE PANELBOARD		1	0			37	60/3	* - -	20/3	38	0			1		
		1		0		39		- * -		40		0		1		Circ Pump #3 & 4
		1			0	41		- - *		42			0	1		

BREAKER NOTES
1) Thermal Magnetic
2) Shunt trip
3) Lock-out device
4) GFEP
5) GFIC
6) AFCI
7) Aux Switches
8) HACR
9) Existing Breaker

CONNECTED PHASE LOADS
TOTAL ØA = 0 VA
TOTAL ØB = 0 VA
TOTAL ØC = 0 VA

LOAD TYPES	Connected	Demand
Lighting (L) =	0	0
Receptacles (R)=	0	0
Motors (M)=	0	0
Electric Heating (H) =	0	0
Equipment (E) =	0	0
Panels (P) =	0	0
Spare (S) =	0	0
Space (X) =	0	0
Total VA =	0	0
Total Amps =	**0.0**	**0.0**

PANEL: LP-B — NEW WORK

NEW OR EXISTING: EXISTING
LOCATION : BASEMENT LEVEL
MOUNTING : SURFACE
ENCLOSURE: NEMA 1
ENTRANCE: TOP

VOLTAGE/PHASE : 120/208V, 3Ø, 4W
BUS AMPS : 225A
MAIN BREAKER : 225A
FED FROM : WIREWAY TAP

NEUTRAL BUS: 100%
GROUND BUS: YES- BOLTED
ISO. GRND. BUS: NONE
FULLY RATED AIC: 10,000
TVSS: NONE

LOAD DESCRIPTION	LOAD TYPE	NOTE	VOLT-AMPS A	VOLT-AMPS B	VOLT-AMPS C	CKT	BKR/ POLE	A B C	BKR/ POLE	CKT	VOLT-AMPS A	VOLT-AMPS B	VOLT-AMPS C	NOTE	LOAD TYPE	LOAD DESCRIPTION
FRONT COUNTER - Recep		1	0			1	20/1	* - -	20/1	2	0			1		Lobby/Public Toilet - Recep
Monitors - Recep		1		0		3	20/1	- * -	20/1	4		0		1		Lobby/Public Toilet View Rm - Lts
FRONT COUNTER - Spare		1			0	5	20/1	- - *	20/1	6			0	1		Viewing Rm/Hall - Recept
OFFICE DOGHOUSE		1	0			7	20/1	* - -	20/1	8	0			1		Main Office Col West - Recept
OFFICE DOGHOUSE		1		0		9	20/1	- * -	20/1	10		0		1		Main Office Copier - Recept
OFFICE DOGHOUSE		1			0	11	20/1	- - *	20/1	12			0	1		Supervisor Off/Hall - Lights
OFFICE DOGHOUSE		1	0			13	20/1	* - -	20/1	14	0			1		Supervisor Off - Recept
OFFICE DOGHOUSE		1		0		15	20/1	- * -	20/1	16		0		1		Vault - Recept
Hazardous Material		1			0	17	100/2	- - *	20/1	18			0	1		Paper Shreader
Container		1	0			19		* - -	20/1	20	0			1		Main Office - Lights
SPACE		1		0		21	--	- * -	20/1	22		0		1		Main Office - Lights
SPACE		1			0	23	--	- - *	20/1	24			0	1		Water Heater
SPACE		1	0			25	--	* - -		26	0			1		
SPACE		1		0		27	--	- * -		28		0		1		
SPACE		1			0	29	--	- - *	--	30			0	1		SPACE
SPACE		1	0			31	--	* - -	--	32	0			1		SPACE
MS-EF-1		1		0		33	20/1	- * -		34		0		1		
FACP (NEW)		1			0	35	20/1	- - *	60/3	36			0	1		SPARE
FSP-1 (PREACTION)		1	0			37	20/1	* - -		38	0			1		
		1		0		39	20/1	- * -	20/1	40		0		1		HVAC CONTROL CIRCUIT
AIR COMPRESSOR		1			0	41	15/1	- - *	20/1	42			0	1		PANEL RECEPT

BREAKER NOTES
1) Thermal Magnetic
2) Shunt trip
3) Lock-out device
4) GFEP
5) GFIC
6) AFCI
7) Aux Switches
8) HACR
9) Existing Breaker

CONNECTED PHASE LOADS
TOTAL ØA = 0 VA
TOTAL ØB = 0 VA
TOTAL ØC = 0 VA

LOAD TYPES	Connected	Demand
Lighting (L) =	0	0
Receptacles (R)=	0	0
Motors (M)=	0	0
Electric Heating (H) =	0	0
Equipment (E) =	0	0
Panels (P) =	0	0
Spare (S) =	0	0
Space (X) =	0	0
Total VA =	0	0
Total Amps =	**0.0**	**0.0**

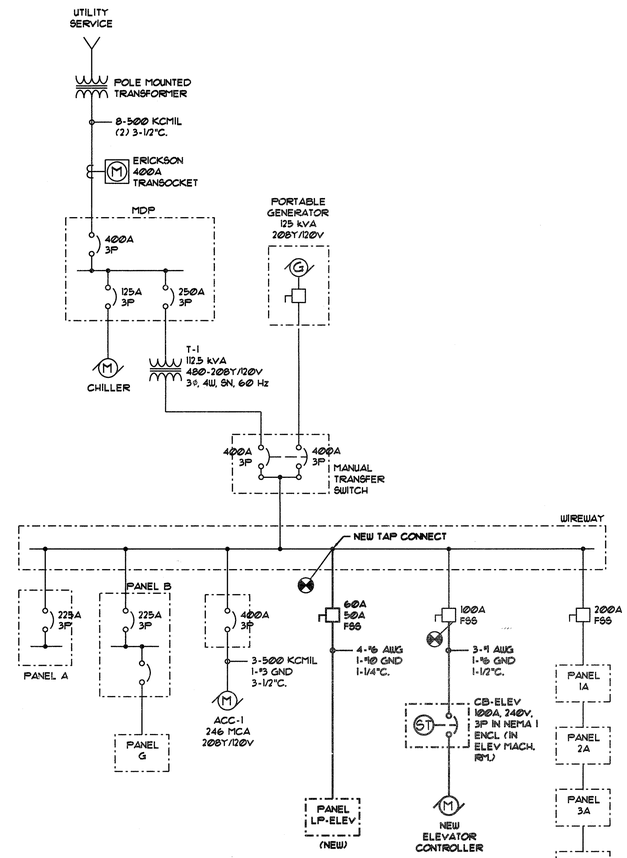

1 Building Existing Service & Distribution Electrical One-Line Diagram

NOT TO SCALE (TO REMAIN)

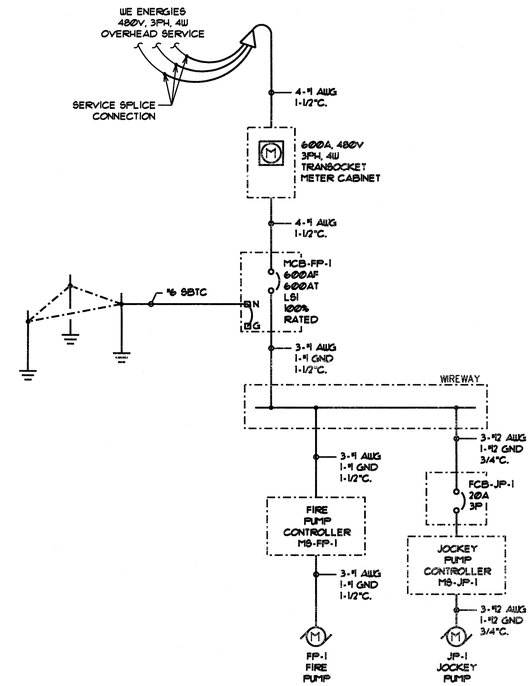

2 Fire Pump Service & Distribution One-Line Riser Diagram - 480Y/277V

NOT TO SCALE

INTERIOR LIGHT FIXTURE SCHEDULE

FIXTURE TYPE	FIXTURE DESCRIPTION	FIXTURE MOUNTING	FIXTURE VOLTAGE	INPUT WATTS	LAMP TYPE	BALLAST	FIXTURE MANUFACTURER	CATALOG NUMBER	REMARKS
F1	ENCLOSED AND GASKETED INDUSTRIAL	CABLE HUNG OR WALL	120	56.7	(2) F32T8	ELECTRONIC LOW THD <10% THD	LITHONIA	DMW 2 32 120	SEE SHEET FOR SPECIFIC MOUNTING INFO (NOTE 2)
							EQUAL	EQUAL	
⊗	EXIT SIGN	WALL OR CEILING	120	-	LED	ELECTRONIC LOW THD <10% THD	LITHONIA	LQM SW3RF 120/277	NOTE 1, 2
							EQUAL	EQUAL	
EMERGENCY	SELF CONTAINED EMERGENCY LIGHT UNIT	WALL	DUAL	MIN	MR24	-	LITHONIA	ELM2 SD	NOTE 1, 2

NOTES:
ALL - PROVIDE ALL MOUNTING HARDWARE, ACCESSORIES, ANCILLARY COMPONENTS AND ITEMS IN DESCRIPTION. VERIFY CATALOG NUMBER WITH SUPPLIER PRIOR TO ORDERING LUMINAIRES.
ALL - COORDINATE FINAL LOCATIONS OF LUMINAIRES WITH MECHANICAL DUCT WORK, NETWORK EQUIPMENT SUPPORT SYSTEMS, ETC. MOUNT EXTERIOR LUMINAIRES AT EQUIPMENT THEY SERVE.
ALL - LUMINAIRES WITH "NL" DESIGNATIONS AFTER TYPE (SHOWN ON PLAN) SHALL BE CIRCUITED TO UNSWITCHED PHASE CONDUCTOR.
ALL - SEE LIGHTING PLANS FOR NUMBER AND TYPE OF LUMINAIRES THAT REQUIRE DUAL LEVEL SWITCHING.
1. CIRCUIT TO UNSWITCHED PHASE CONDUCTOR. PROVIDE NUMBER OF FACES AS REQUIRED FOR APPLICATION.
2. LUMINAIRES SHALL BE UL LISTED FOR WET LOCATIONS.

WISCONSIN KAREN J. LONG 42811-6 WAUWATOSA, WI PROFESSIONAL ENGINEER
11/22/2013

City of Milwaukee
Department of Public Works
Buildings & Fleet Services

GRUMMAN/BUTKUS ASSOCIATES
Energy Efficiency Consultants and Sustainable Design Engineers
1011 North Mayfair Road, Suite 300
414 476.8980
Copyright © 2013 Grumman/Butkus Associates

MPD Police Evidence Warehouse
Fire Suppression
2620 W. Wisconsin Avenue
Electrical One-Line Diagram

REVISIONS

DESIGNED BY: BMW
DRAWN BY: JFC
CHECKED BY: BMW
DATE: 11/22/13
SCALE: NO SCALE
JOB NUMBER: PL120040120
SHEET NUMBER: E-5
OF