Milwaukee
Water Works

LINNWOOD TREATMENT PLANT

WP–320 WASH WATER PIPING REHABILITATION

DRAWING INDEX

GENERAL

WP–320–G1	TITLE SHEET AND DRAWING INDEX

CIVIL

WP–320–C1	NORTH WASH WATER DISCHARGE PLAN
WP–320–C2	WASH WATER SUCTION PIPING MODIFICATIONS
WP–320–C3	WASH WATER SUCTION PIPING LINING LIMITS
WP–320–C4	SOUTH WASH WATER DISCHARGE PLAN
WP–320–C5	36″ WASH WATER PIPE PLAN
WP–320–C6	DETAILS

WISCONSIN ANTHONY AQUILINO E-32456 MILWAUKEE, WI PROFESSIONAL ENGINEER

NO.	BY	REVISION	DATE

Milwaukee Water Works — Water Engineering, Department of Public Works

WASH WATER PIPING REHABILITATION

TITLE SHEET AND DRAWING INDEX

DESIGNED BY	A. FAHRES
DRAWN BY	S. MILLER
CHECKED BY	A. FAHRES
DATE	3/7/2016
SCALE	NONE
PROJECT NUMBER	WT450132100
OFFICIAL NOTICE	102–1–2016

APPROVED — DATE 9/15/2016 — MANAGEMENT ENGINEER

9/15/2016 — SPECIAL DEPUTY COMMISSIONER OF PUBLIC WORKS

DRAWING NO. WP–320–G1

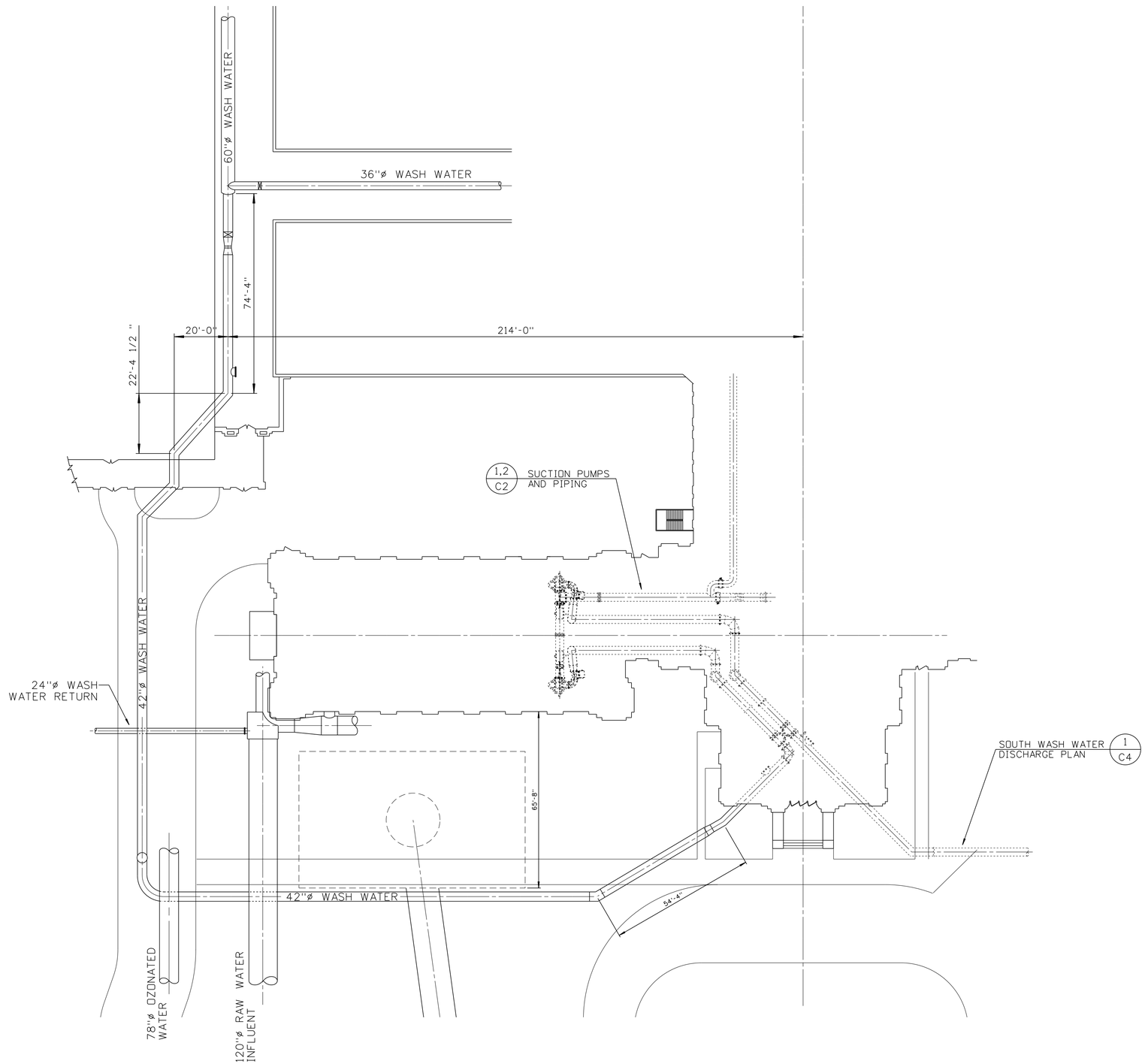

NO.	BY	REVISION	DATE

Milwaukee **Water Works** — **Water Engineering**
Department of Public Works

WASH WATER PIPING REHABILITATION

NORTH WASH WATER DISCHARGE PLAN

		APPROVED	DATE
DESIGNED BY	A. FAHRES		
DRAWN BY	S. MILLER	MANAGEMENT ENGINEER	9/15/2016
CHECKED BY	A. FAHRES		
DATE			
SCALE	1" = 20'	SPECIAL DEPUTY COMMISSIONER OF PUBLIC WORKS	9/15/2016
PROJECT NUMBER WT450132100			
OFFICIAL NOTICE 102-1-2016		DRAWING NO.	WP-320-C1

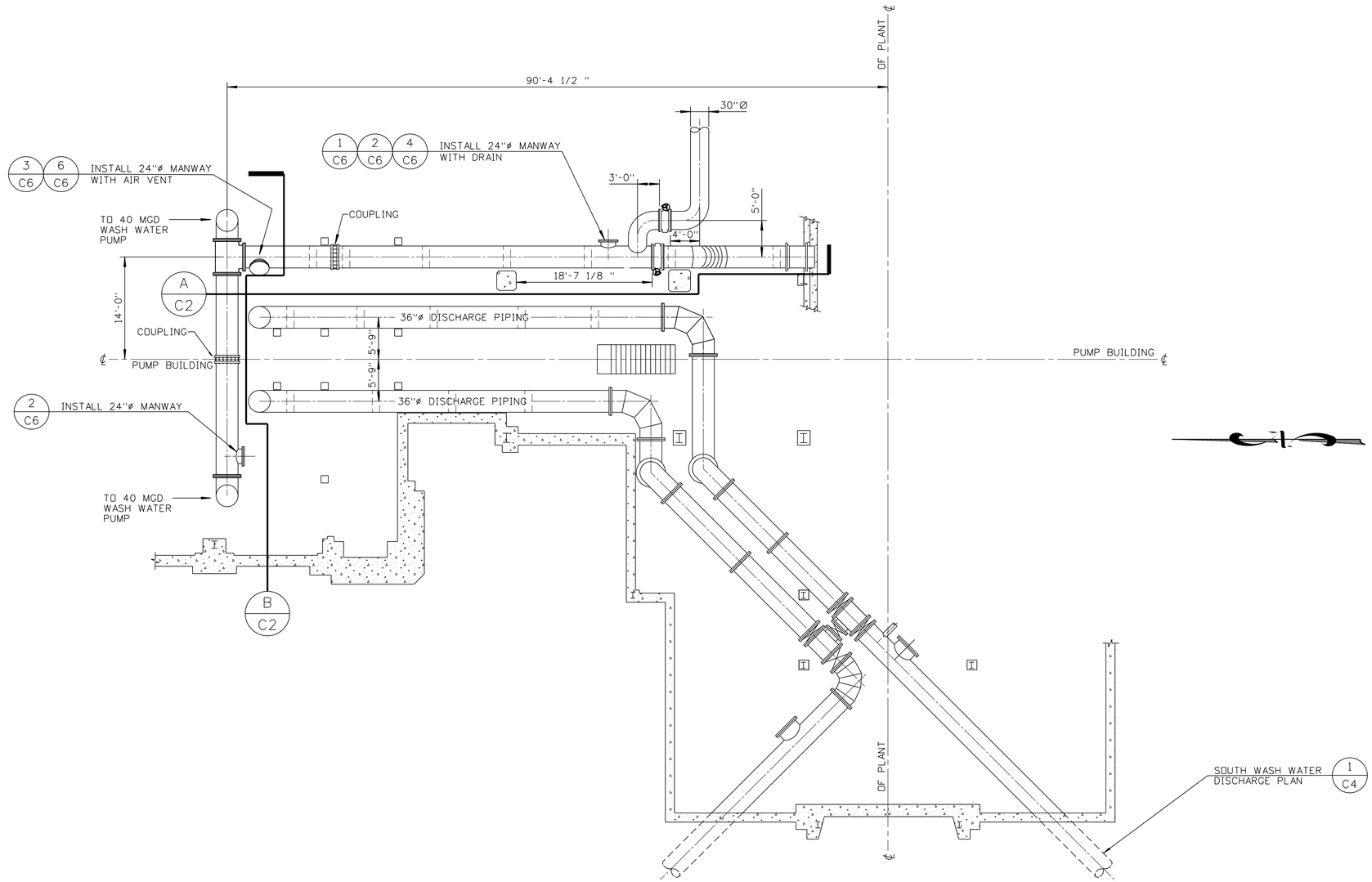

1 C1 PLAN - ELEVATION -7.17

SCALE = 1/8" = 1' - 0"

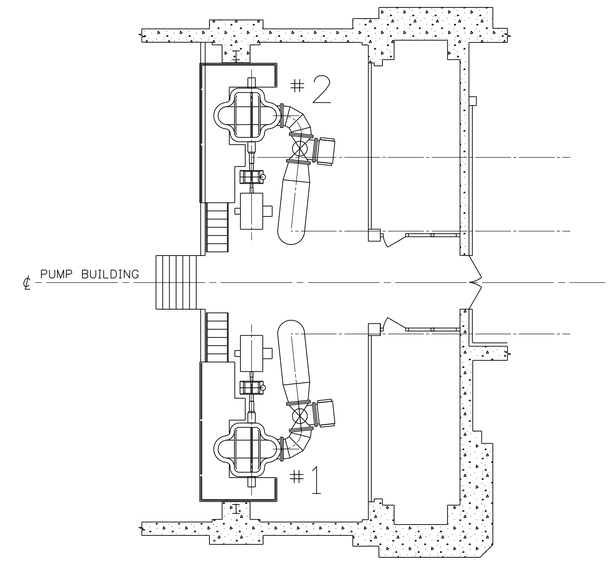

2 C1 PLAN - ELEVATION +1.50

SCALE = 1/8" = 1' - 0"

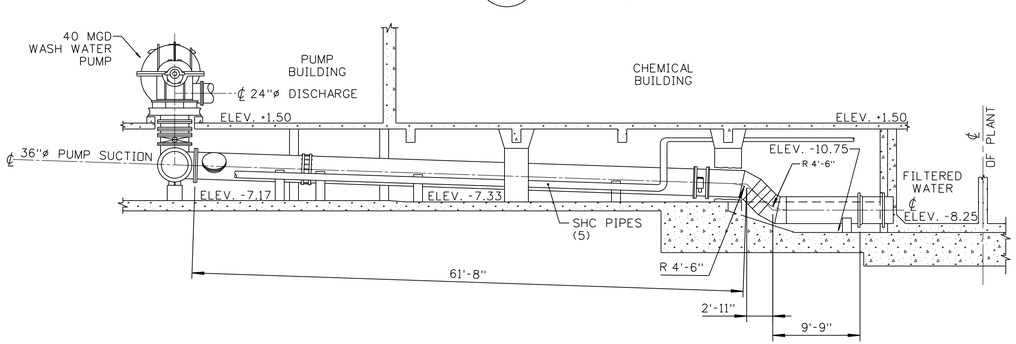

A C2 SECTION - 36"ø SUCTION LINE

SCALE = 1/8" = 1'-0"

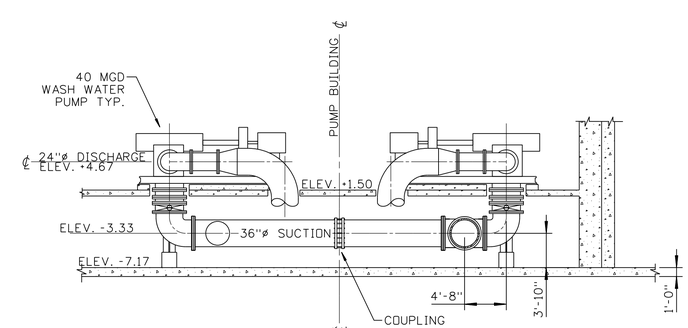

B C2 SECTION - 36"ø SUCTION LINE BETWEEN PUMPS

SCALE = 1/8" = 1'-0"

NO.	BY	REVISION	DATE

Milwaukee Water Works — Water Engineering, Department of Public Works

WASH WATER PIPING REHABILITATION

WASH WATER SUCTION PIPING MODIFICATIONS

DESIGNED BY	A. FAHRES
DRAWN BY	S. MILLER
CHECKED BY	A. FAHRES
DATE	3/7/16
SCALE	1/8" = 1'-0"
PROJECT NUMBER	WT450132100
OFFICIAL NOTICE	102-1-2016

APPROVED — DATE 9/15/2016 — PLANTS PROJECT ENGINEER

CHIEF DESIGN ENGINEER — 9/15/2016 — SPECIAL DEPUTY COMMISSIONER OF PUBLIC WORKS

DRAWING NO. WP-320-C2

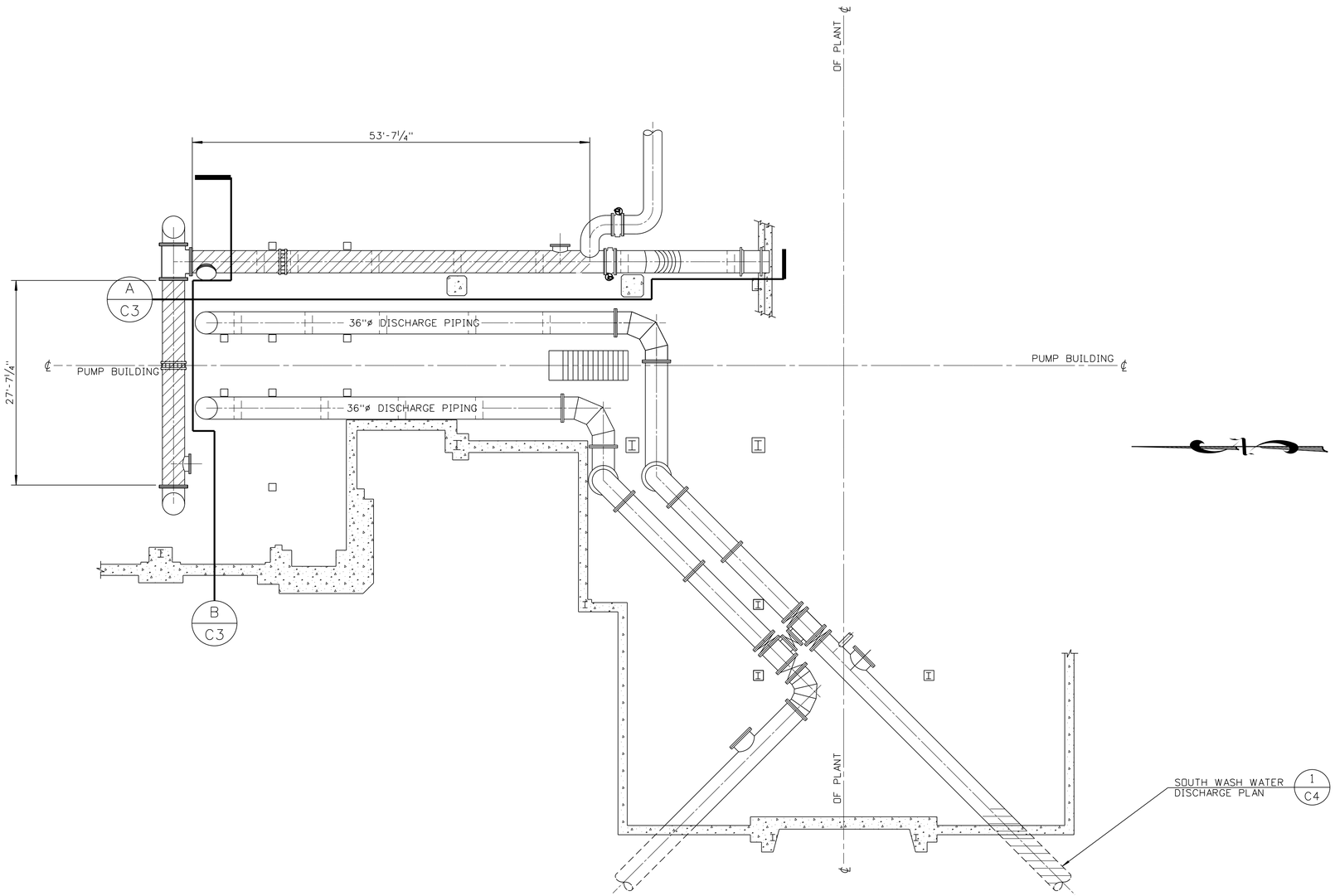

PLAN - ELEVATION -7.17

SCALE = 1/8" = 1'- 0"

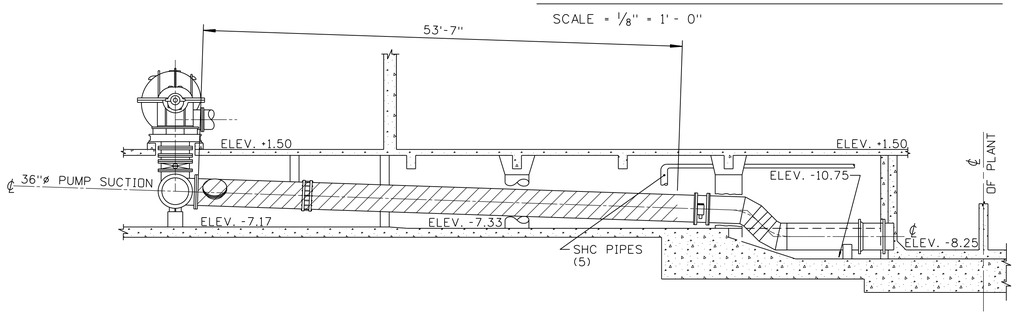

A/C3 SECTION - 36"ø SUCTION LINE

SCALE = 1/8" = 1'-0"'

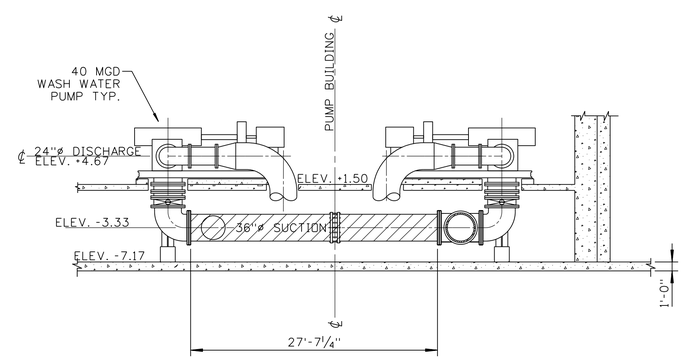

B/C3 SECTION - 36"ø SUCTION LINE BETWEEN PUMPS

SCALE = 1/8" = 1'-0"'

AREA TO BE LINED

NO.	BY	REVISION	DATE

Milwaukee Water Works — Water Engineering, Department of Public Works

WASH WATER PIPING REHABILITATION

WASH WATER SUCTION PIPING LINING LIMITS

		APPROVED	DATE
DESIGNED BY	A. FAHRES		
DRAWN BY	S. MILLER	MANAGEMENT ENGINEER	9/15/2016
CHECKED BY	A. FAHRES		
DATE	3/7/2016		
SCALE	1/8" = 1'-0"	SPECIAL DEPUTY COMMISSIONER OF PUBLIC WORKS	9/15/2016
PROJECT NUMBER	WT450132100		
OFFICIAL NOTICE	102-1-2016	DRAWING NO.	WP-320-C3

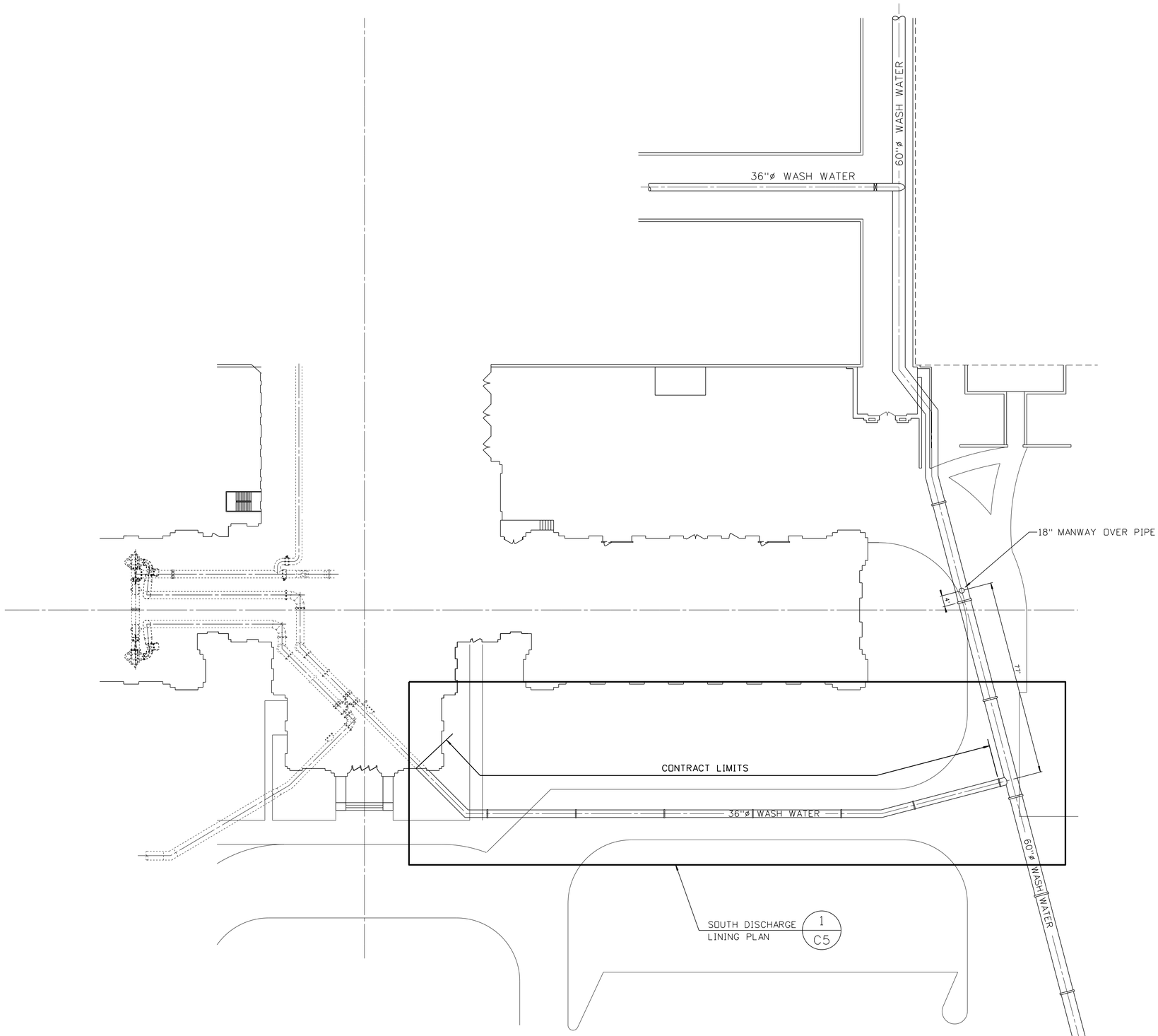

1
C1-C3

SOUTH WASH WATER DISCHARGE PIPE

SCALE = 1" = 20'

NO.	BY	REVISION	DATE
△			
△			

Milwaukee Water Works

Water Engineering
Department of Public Works

WASH WATER PIPING

SOUTH WASH WATER DISCHARGE PLAN

		APPROVED	DATE
DESIGNED BY	A. FAHRES		
DRAWN BY	S. MILLER	MANAGEMENT ENGINEER	9/15/2016
CHECKED BY	A. FAHRES		
DATE	3/8/2016		
SCALE	1" = 20'	SPECIAL DEPUTY COMMISSIONER OF PUBLIC WORKS	9/15/2016
PROJECT NUMBER	WT450132100		
OFFICIAL NOTICE	102-1-2016		

DRAWING NO. **WP-320-C4**

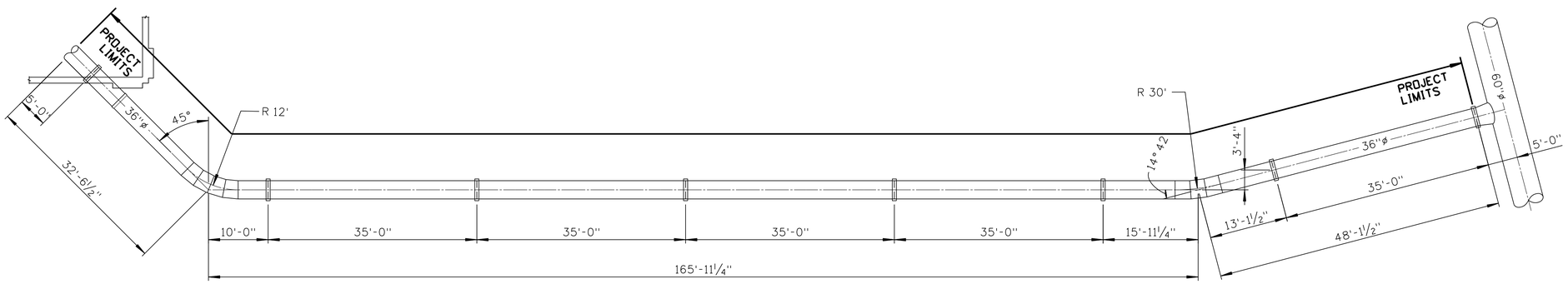

1
C4

SOUTH DISCHARGE LINING PLAN

SCALE = 1" = 10'

NO.	BY	REVISION	DATE
△			
△			

Milwaukee **Water Works** — **Water Engineering** Department of Public Works

WASH WATER PIPING REHABILITATION

36" WASH WATER PIPE PLAN

DESIGNED BY	A. FAHRES
DRAWN BY	S. MILLER
CHECKED BY	A. FAHRES
DATE	7/7/2016
SCALE	1"=10'
PROJECT NUMBER	WT450132100
OFFICIAL NOTICE	102-1-2016

APPROVED — DATE 9/15/2016 — MANAGEMENT ENGINEER

9/15/201 — SPECIAL DEPUTY COMMISSIONER OF PUBLIC WORKS

DRAWING NO. **WP-320-C5**

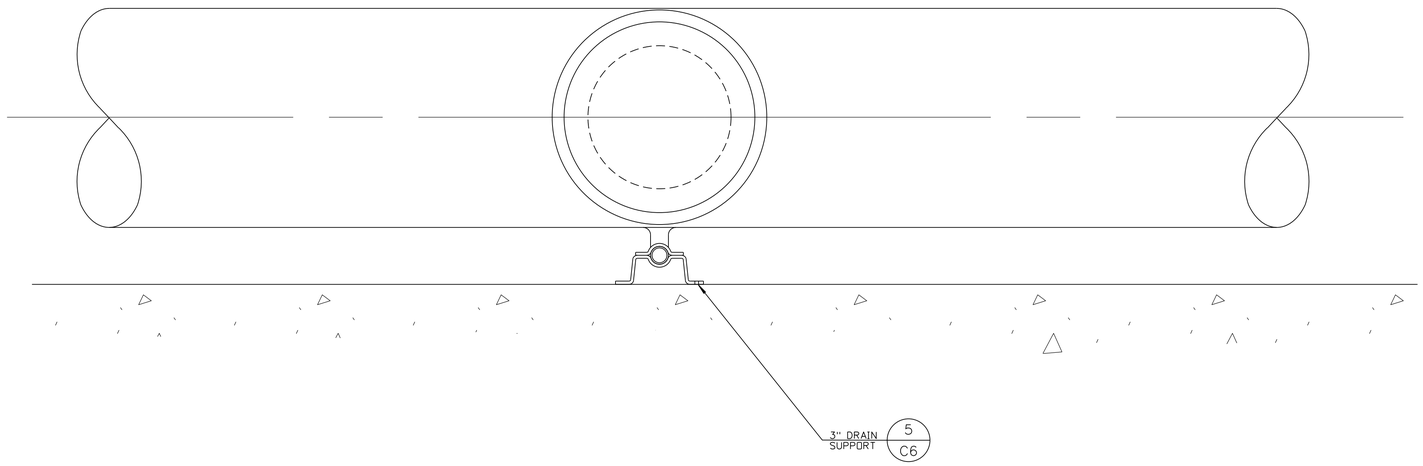

1 / C2 SECTION - MANHOLE INSTALLATION

SCALE = 1" = 1'-0"

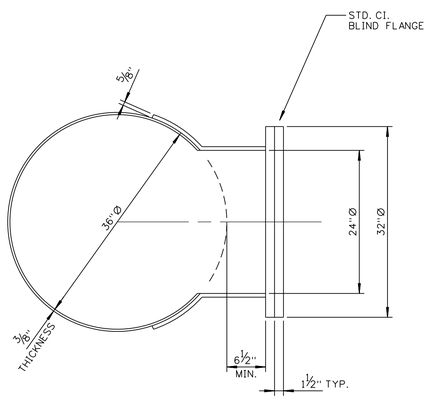

2 / C2 DETAIL - 90° MANHOLE

SCALE = 1" = 1'-0"

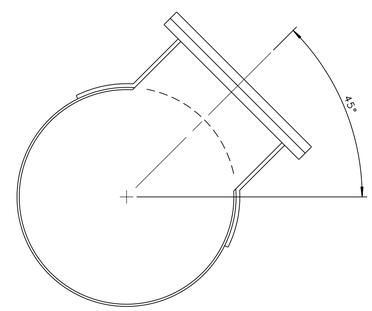

NOTE:
SAME DIMENSIONS AS DETAIL 2

3 / C2 DETAIL - 45° MANHOLE

SCALE = 1" = 1'-0"

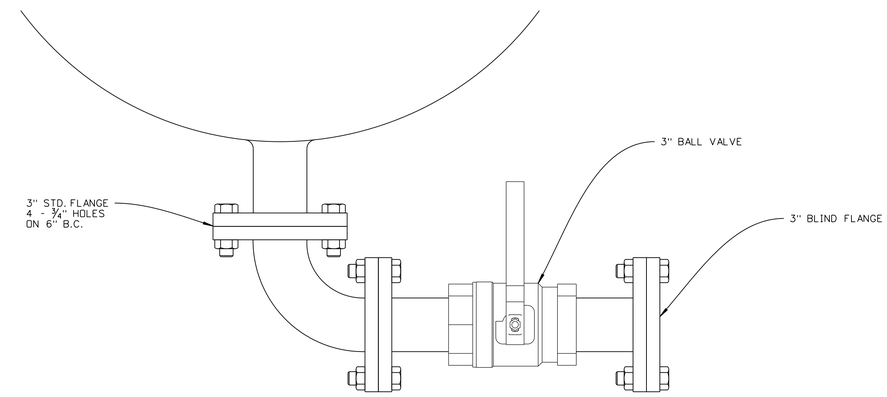

4 / C6 DETAIL - 3" DRAIN NOZZLE

SCALE = 3" = 1'-0"

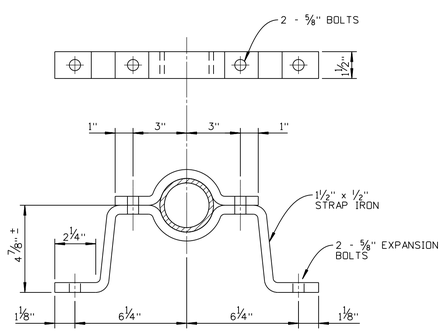

5 / C6 DETAIL - 3" DRAIN SUPPORT

SCALE = 3" = 1'-0"

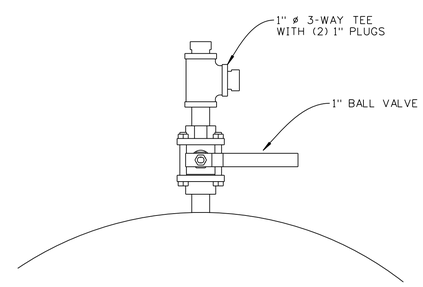

6 / C6 DETAIL - 1" AIR VENT

SCALE = 3" = 1'-0"

NO.	BY	REVISION	DATE
△			
△			

Milwaukee Water Works — Water Engineering, Department of Public Works

WASH WATER PIPING REHABILITATION

DETAILS

		APPROVED	DATE
DESIGNED BY	A. FAHRES		
DRAWN BY	S. MILLER	MANAGEMENT ENGINEER	9/15/2016
CHECKED BY	A. FAHRES		
DATE	7/12/2016		
SCALE	AS SHOWN	SPECIAL DEPUTY COMMISSIONER OF PUBLIC WORKS	9/15/2016
PROJECT NUMBER	WT450132100		
OFFICIAL NOTICE	102-1-2016	DRAWING NO.	WP-320-C6