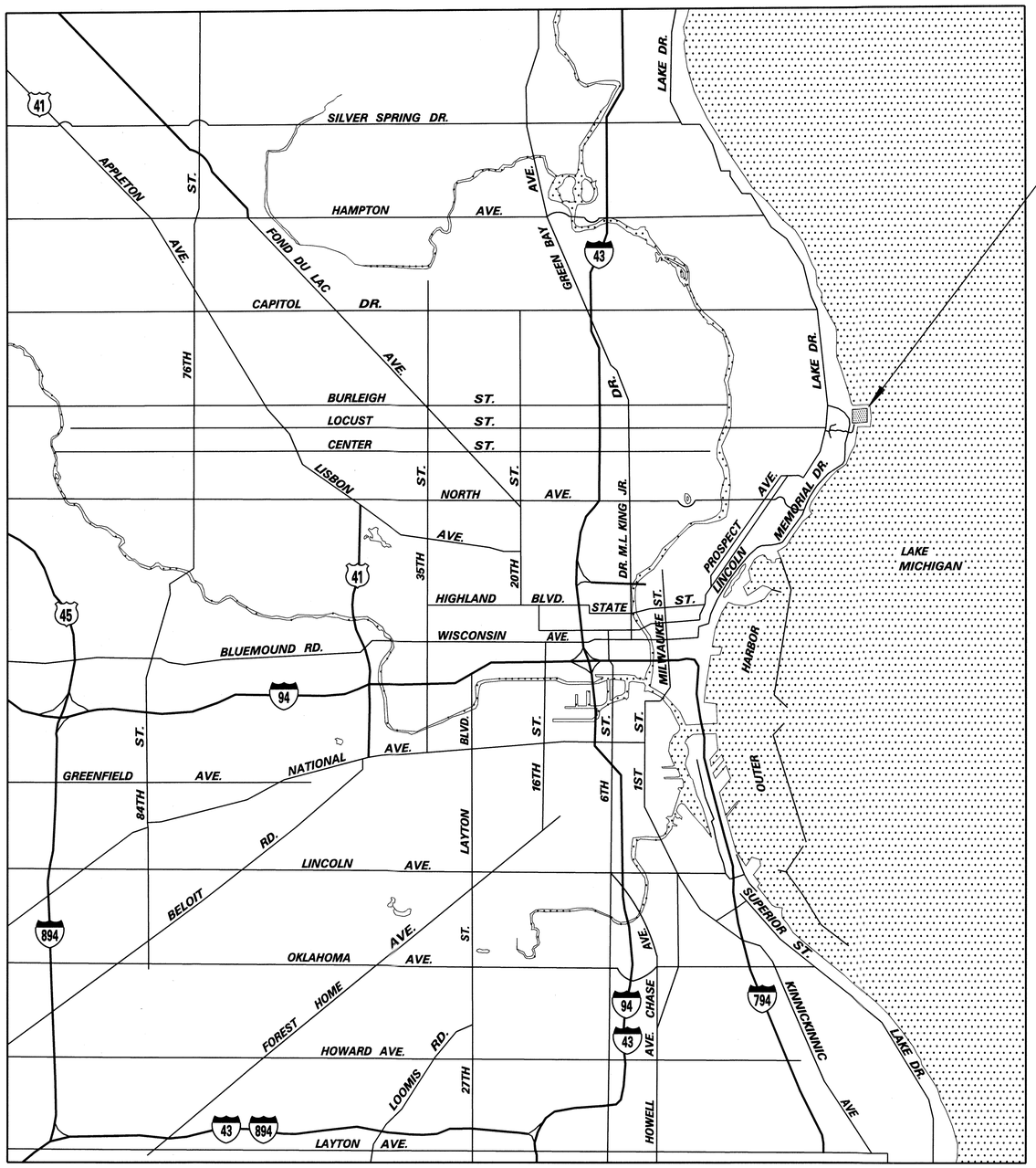

MILWAUKEE, WISCONSIN

LOCATION MAP

LINNWOOD PURIFICATION PLANT PROJECT LOCATION

Milwaukee Water Works

LINNWOOD PURIFICATION PLANT

WP–314: PUMP ROOM ROOF REPLACEMENT

DRAWING INDEX

DRAWING NO.	TITLE
CONTRACT DRAWINGS	
WP–314–01	PUMP ROOM ROOF REPLACEMENT – LOCATION MAP & DRAWING INDEX
WP–314–02	PUMP ROOM ROOF REPLACEMENT – ROOF PLAN AND DETAILS
WP–314–03	PUMP ROOM ROOF REPLACEMENT – ROOF DETAILS
REFERENCE DRAWINGS	
WP–22–3	WATER PURIFICATION PLANT PUMP BUILDING – ROOF PLAN & EXTERIOR ELEVATIONS
WP–22–4	WATER PURIFICATION PLANT PUMP BUILDING – EXTERIOR DETAILS
WP–22–5	WATER PURIFICATION PLANT PUMP BUILDING – EAST WALL INTERIOR ELEVATION
WP–22–7	WATER PURIFICATION PLANT PUMP BUILDING – MISCELLANEOUS DETAILS
WP–22–8	WATER PURIFICATION PLANT PUMP BUILDING – INTERIOR DETAILS OF NORTH WALL
WP–22–9	WATER PURIFICATION PLANT PUMP BUILDING – INTERIOR DETAILS OF EAST WALL
WP–22–18	WATER PURIFICATION PLANT PUMP BUILDING – PLUMBING, ROOF DRAINS
WP–23–5A	WATER PURIFICATION PLANT CHEMICAL BUILDING SUPERSTRUCTURE – PLAN AT ELEV. 43'–6"
WP–23–33	WATER PURIFICATION PLANT CHEMICAL BUILDING SUPERSTRUCTURE – CONCRETE FLOOR PLAN, ELEVATION 31'–0" PORTION
WP–23–43	WATER PURIFICATION PLANT CHEMICAL BUILDING SUPERSTRUCTURE – CONCRETE ROOF DETAILS, ROTUNDA AND ADJACENT SLABS
WP–56–2	WATER PURIFICATION PLANT CHEMICAL & SERVICE BLDG. PLUMBING – CHEMICAL BUILDING ROOF DRAINAGE
WP–94–2	LINNWOOD PURIFICATION PLANT – PUMP BUILDING ROOF REHABILITATION
WP–116–1	LINNWOOD PURIFICATION PLANT – ROOF FLASHING DETAILS, CHEMICAL, SERVICE & ADJOINING BLDG'S.
WP–179–1	LINNWOOD PURIFICATION PLANT – BUILDINGS ROOF PLAN
WP–179–3	LINNWOOD PURIFICATION PLANT – ROOF FLASHING DETAILS, CHEMICAL, SERVICE & ADJOINING BLDG'S.

0 0.5 1.0 1.5
APPROX SCALE IN MILES

WISCONSIN
DINAH G. GANT
E-24682
MILWAUKEE, WI
6/29/2012
PROFESSIONAL ENGINEER

NO.	BY	REVISION	DATE
△			
△			
△			

Milwaukee Water Works — Water Engineering, Department of Public Works

LINNWOOD PURIFICATION PLANT

PUMP ROOM ROOF REPLACEMENT

LOCATION MAP & DRAWING INDEX

DESIGNED BY	P.J.G.
DRAWN BY	P.J.G.
CHECKED BY	S.P.M.
DATE	3–28–2012
SCALE	AS SHOWN
WORK ORDER	WT450121100
OFFICIAL NOTICE	102–2012
FILE NO.	B–12–1

APPROVED / DATE
Anthony J. Supinski 6/27/12 — PLANTS PROJECT ENGINEER
Dinah G. Gant 6/29/12 — CHIEF DESIGN ENGINEER
C.W. Lewis 6/29/12 — SPECIAL DEPUTY COMMISSIONER OF PUBLIC WORKS

DRAWING NO. WP–314–01

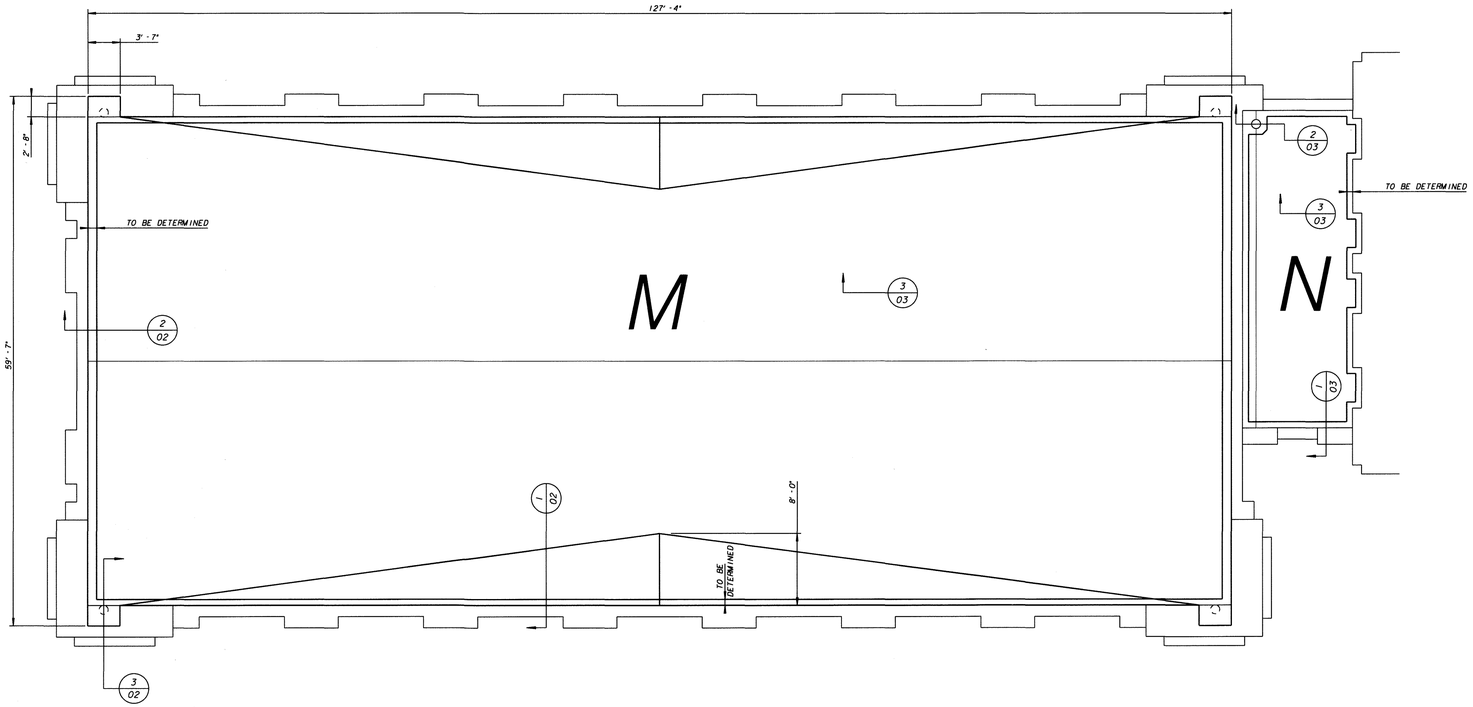

ROOF PLAN – PUMP BUILDING (ROOFS "M" & "N")

1/8" = 1'-0"

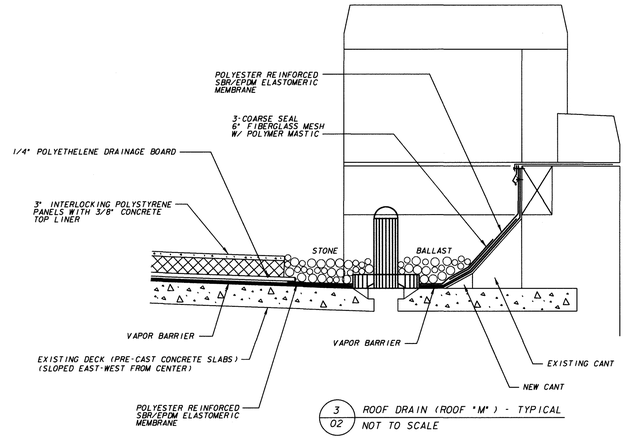

3/02 ROOF DRAIN (ROOF "M") - TYPICAL
NOT TO SCALE

NOTES:

1. REMOVE AND DISPOSE OF THE EXISTING EPDM SHEET MEMBRANE AND UNDERLYING BUILT-UP ROOFING SYSTEM, INCLUDING INSULATION, FLASHING, ETC. DOWN TO THE ROOF DECK (ROOF "M" & "N").
2. REMOVE THE EXISTING LIGHTWEIGHT CONCRETE FILL SADDLES DOWN TO THE ROOF DECK (ROOF "M").
3. REMOVE EXISTING WOOD NAILER BLOCKS FLUSH WITH SLAB DECK (ROOF "N").
4. INSPECT, REPAIR, AND SEAL DAMAGED ROOF DECK CRACKS & JOINTS (ROOFS "M" & "N").
5. REPAIR ANY SAWCUTTING, HOLES OR CRACKING EVIDENT AFTER REMOVAL OF EXISTING TERMINATION BAR ALONG WALL PERIMETER.
6. SEAL PRE-CAST SLAB JOINTS WITH STRIPS OF FIBERGLASS BASE SHEET (ROOFS "M" & "N").
7. FURNISH AND INSTALL A COMPLETE, INVERTED ASPHALT ROOFING SYSTEM AS SHOWN IN DETAILS (ROOF "M" & "N"):
   - SINGLE-PLY VAPOR BARRIER SET IN TYPE III ASPHALT.
   - TAPERED INSULATION CRICKETS SET IN TYPE III ASPHALT (COVERED BY 1/2" COVERBOARD) TO ENSURE PROPER DRAINAGE (ROOF "M" ONLY).
   - POLYESTER REINFORCED SBR/EPDM ELASTOMERIC MEMBRANE.
   - 1/4" DRAINAGE BOARD
   - 3" INTERLOCKING POLYSTYRENE PANELS WITH 3/8" CONCRETE LINING (INCLUDE STRAPPING AT SLOPE CHANGES).
8. INSTALL CANT STRIPS ALONG PERIMETER OF ROOF "N" AND WHERE CALLED OUT ON ROOF "M", INCLUDING ROOFING, FLASHING, COUNTERFLASHING, ETC.
9. PERIMETER TO BE FILLED IN WITH STONE BALLAST (ROOFS "M" & "N").
10. REPAIR OR REPLACE ROOF DRAIN PARTS, AS NECESSARY.

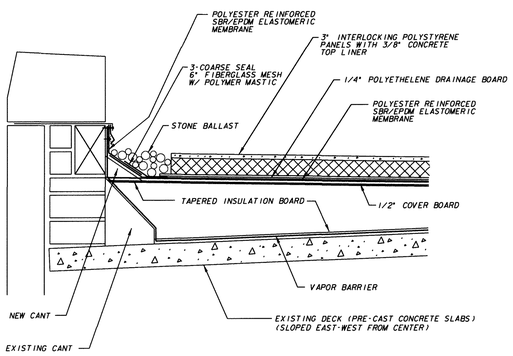

1/02 PROFILE - EAST & WEST WALLS (EXISTING SADDLE REMOVED)
NOT TO SCALE

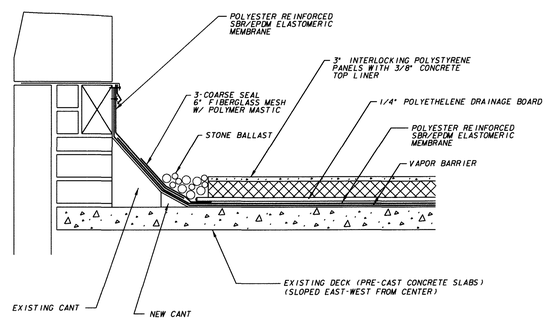

2/02 PROFILE - NORTH & SOUTH WALLS
NOT TO SCALE

NO.	BY	REVISION	DATE

Milwaukee Water Works — Water Engineering, Department of Public Works

LINNWOOD PURIFICATION PLANT

PUMP ROOM ROOF REPLACEMENT

ROOF PLAN AND DETAILS

DESIGNED BY	P.J.G.
DRAWN BY	P.J.G.
CHECKED BY	S.P.M.
DATE	3-28-2012
SCALE	AS SHOWN
WORK ORDER	WT450121100
OFFICIAL NOTICE	102-2012
FILE NO.	B-12-1

APPROVED — DATE
Anthony J. Sujewski — 6/29/12 — PLANTS PROJECT ENGINEER
Duane G. Brent — 6/29/2012 — CHIEF DESIGN ENGINEER
C. Lewis — 6/29/12 — SPECIAL DEPUTY COMMISSIONER OF PUBLIC WORKS

DRAWING NO. WP-314-02

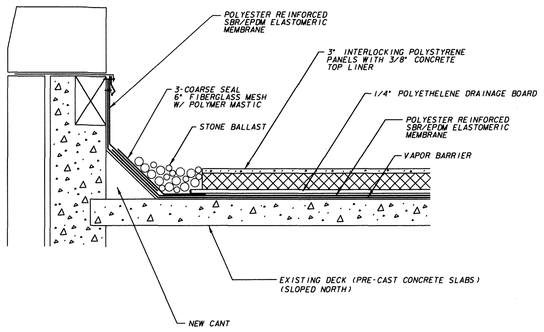

1/02 PROFILE - PERIMETER FLASHING ROOF "N"
NOT TO SCALE

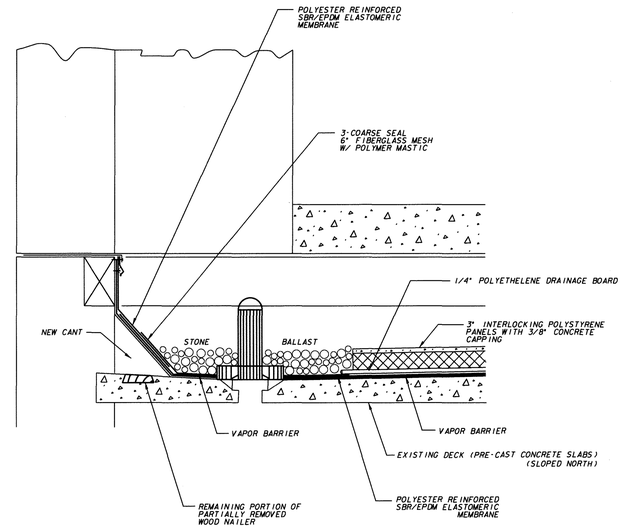

2/02 ROOF DRAIN - ROOF "N"
NOT TO SCALE

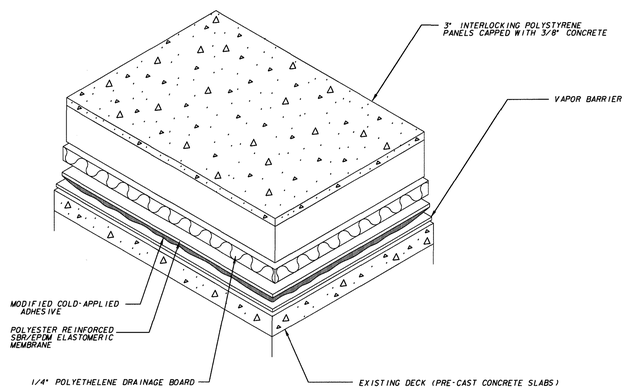

3/02 INVERTED ROOFING SYSTEM (ROOF "M" & "N") - TYPICAL
NOT TO SCALE

NO.	BY	REVISION	DATE
△			
△			
△			

Milwaukee Water Works

Water Engineering
Department of Public Works

LINNWOOD PURIFICATION PLANT

PUMP ROOM ROOF REPLACEMENT

ROOF DETAILS

DESIGNED BY	P.J.G.
DRAWN BY	P.J.G.
CHECKED BY	S.P.M.
DATE	3-28-2012
SCALE	AS SHOWN
WORK ORDER	WT450121100
OFFICIAL NOTICE	102-2012
FILE NO.	B-12-1

APPROVED — DATE
Anthony J. Supinski — 6/27/12
PLANTS PROJECT ENGINEER
Derek S. Brent — 6/29/2012
CHIEF DESIGN ENGINEER
C. Lewis — 6/29/12
SPECIAL DEPUTY COMMISSIONER OF PUBLIC WORKS

DRAWING NO. **WP-314-03**

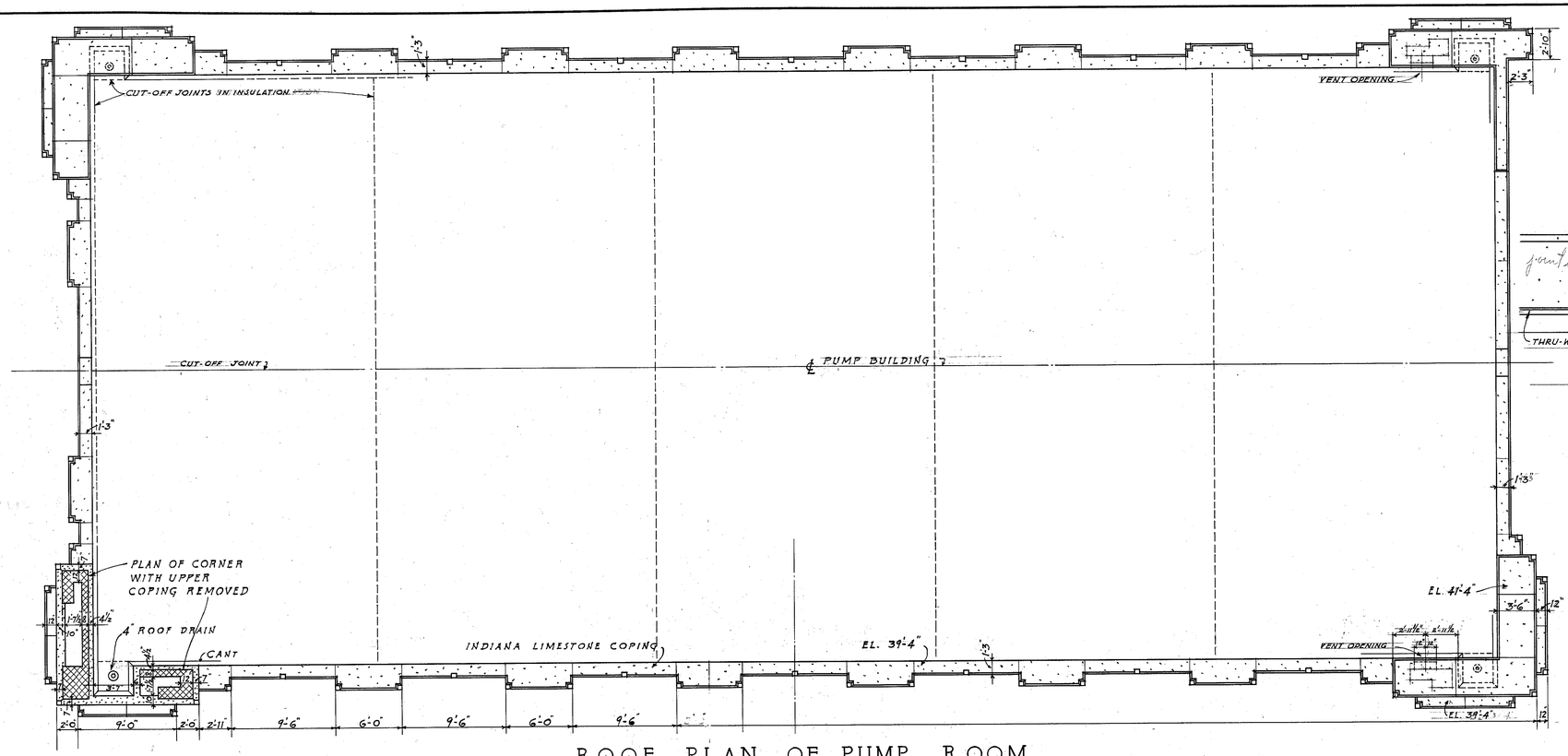

ROOF PLAN OF PUMP ROOM

SCALE IN FEET

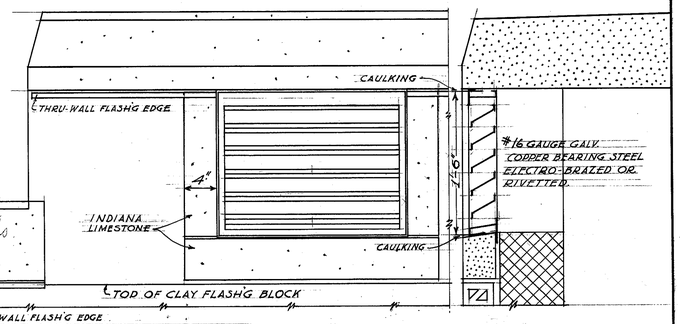

ELEVATION SECTION

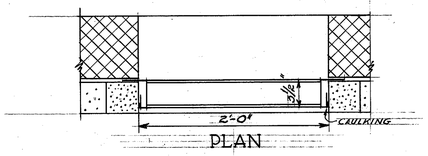

PLAN

VENT OPENINGS IN PARAPET WALLS

SCALE IN FEET

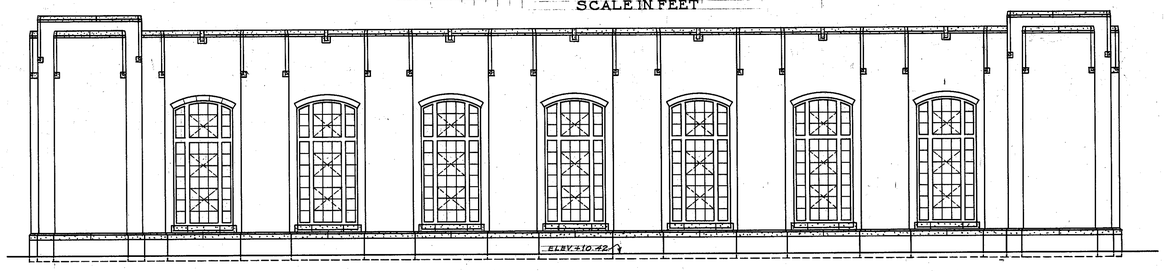

WEST ELEVATION

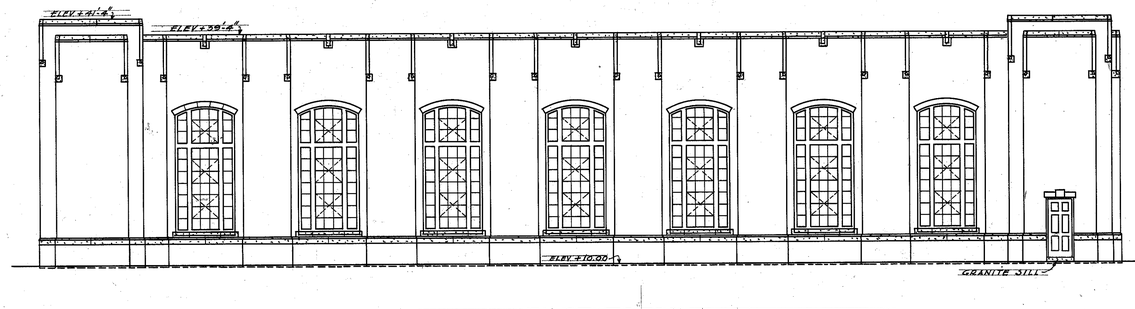

EAST ELEVATION

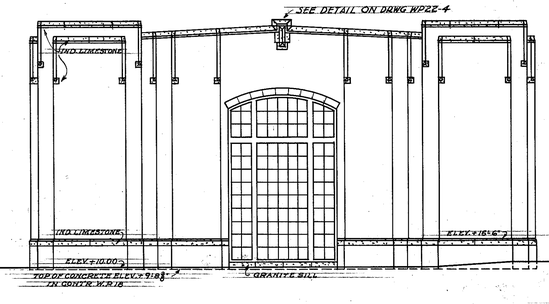

NORTH ELEVATION

SCALE IN FEET

CITY ENGINEER'S OFFICE, MILWAUKEE- WIS.
MILWAUKEE WATER WORKS
WATER PURIFICATION PLANT
PUMP BUILDING
ROOF PLAN
& EXTERIOR ELEVATIONS

APPROVED Alfred Burdett Houston, Consulting Engineers
APPROVED Charles H. Brown, Engineer In Charge
APPROVED R. E. Hoeffing, Comm. of Public Works
APPROVED J. B. Cavada, City Engineer

DESIGNED BY W.W. JUDELL
DRAWN BY E.A. WEGNER
TRACED BY
CHECKED BY W.W. JUDELL
DATE FEB. 1, 1937
SCALE AS SHOWN

MICROFILMED 1-10-73

FILE 3-9-1 DRWG. WP22-3

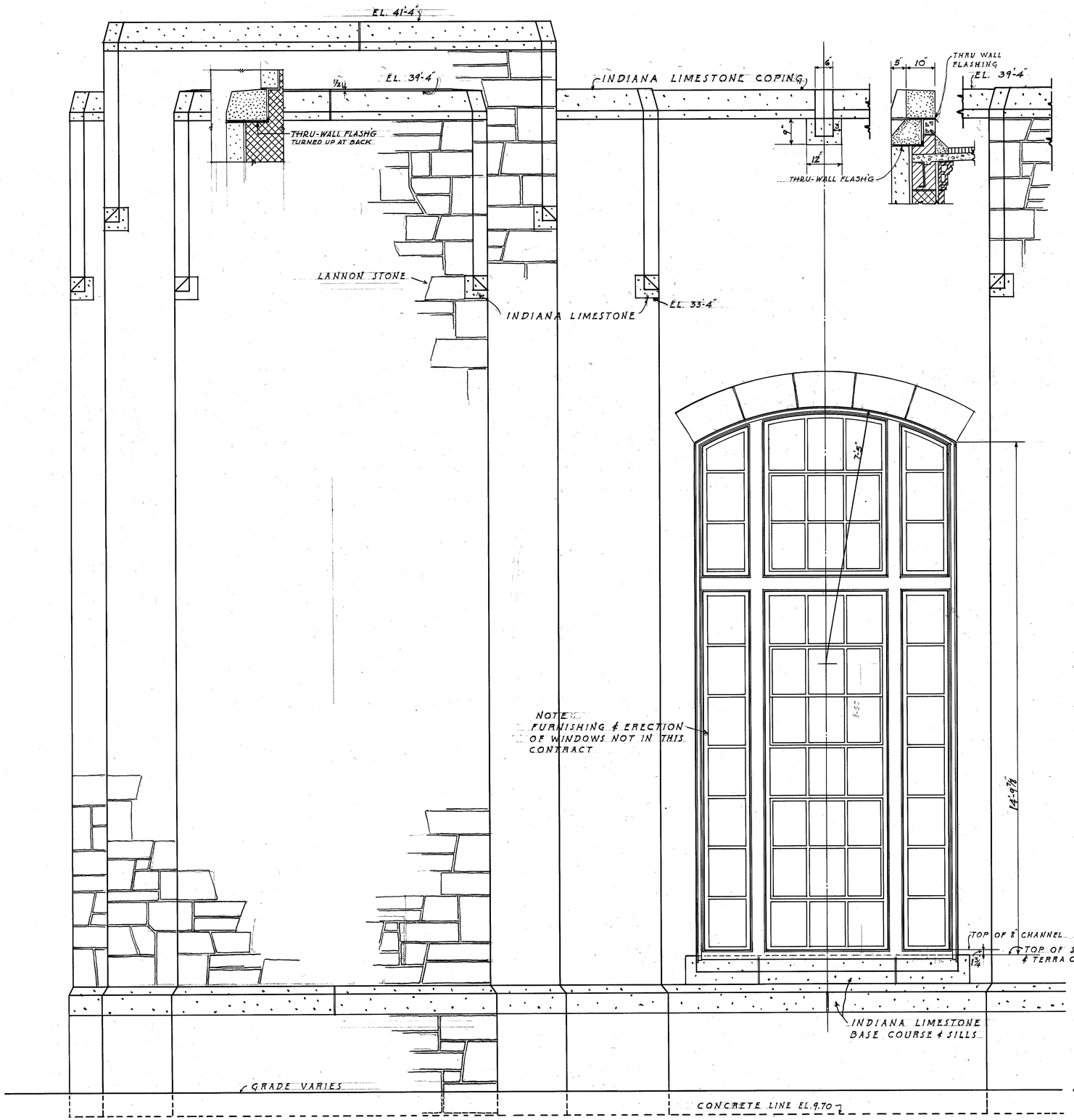

EXTERIOR DETAIL

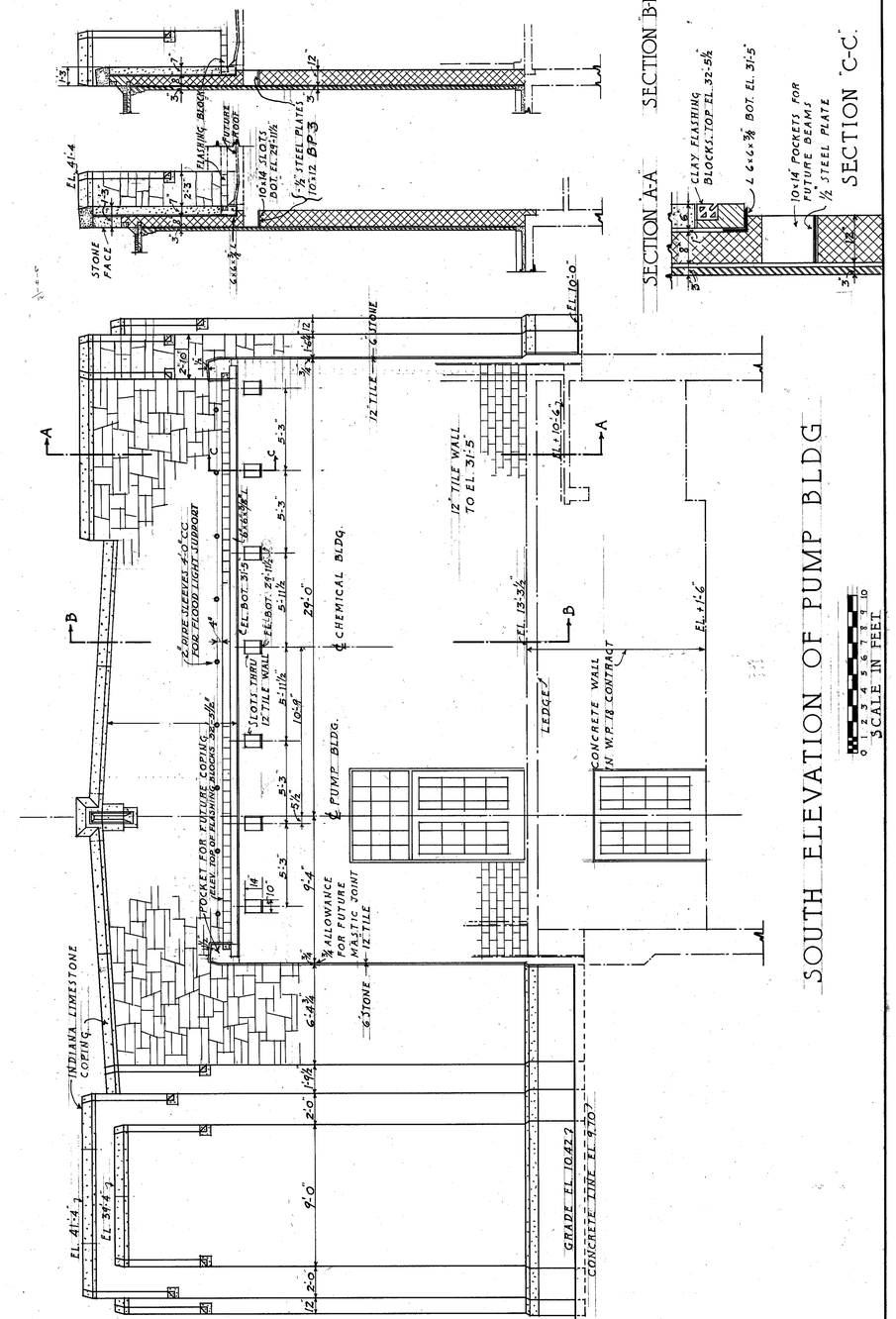

SOUTH ELEVATION OF PUMP BLDG

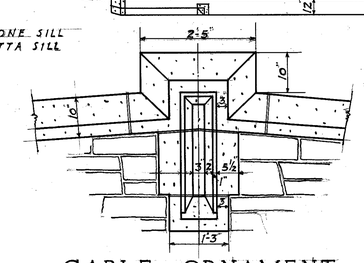

GABLE ORNAMENT

CITY ENGINEER'S OFFICE, MILWAUKEE- WIS.
MILWAUKEE WATER WORKS
WATER PURIFICATION PLANT
PUMP BUILDING
EXTERIOR DETAILS

APPROVED Alvord Burdick & Howson, Consulting Engineers — APPROVED Herbert H. Brown, Engineer in Charge
APPROVED R. E. Hertwig, Comm. of Public Works — APPROVED J. Schwada, City Engineer

DESIGNED BY W.W. JUDELL
DRAWN BY F.A. WEGNER
TRACED BY
CHECKED BY W.W. JUDELL
DATE FEB. 1, 1937
SCALE AS SHOWN
FILE 3-9-1 DRWG. WP 22-4

MICROFILMED 1-10-72

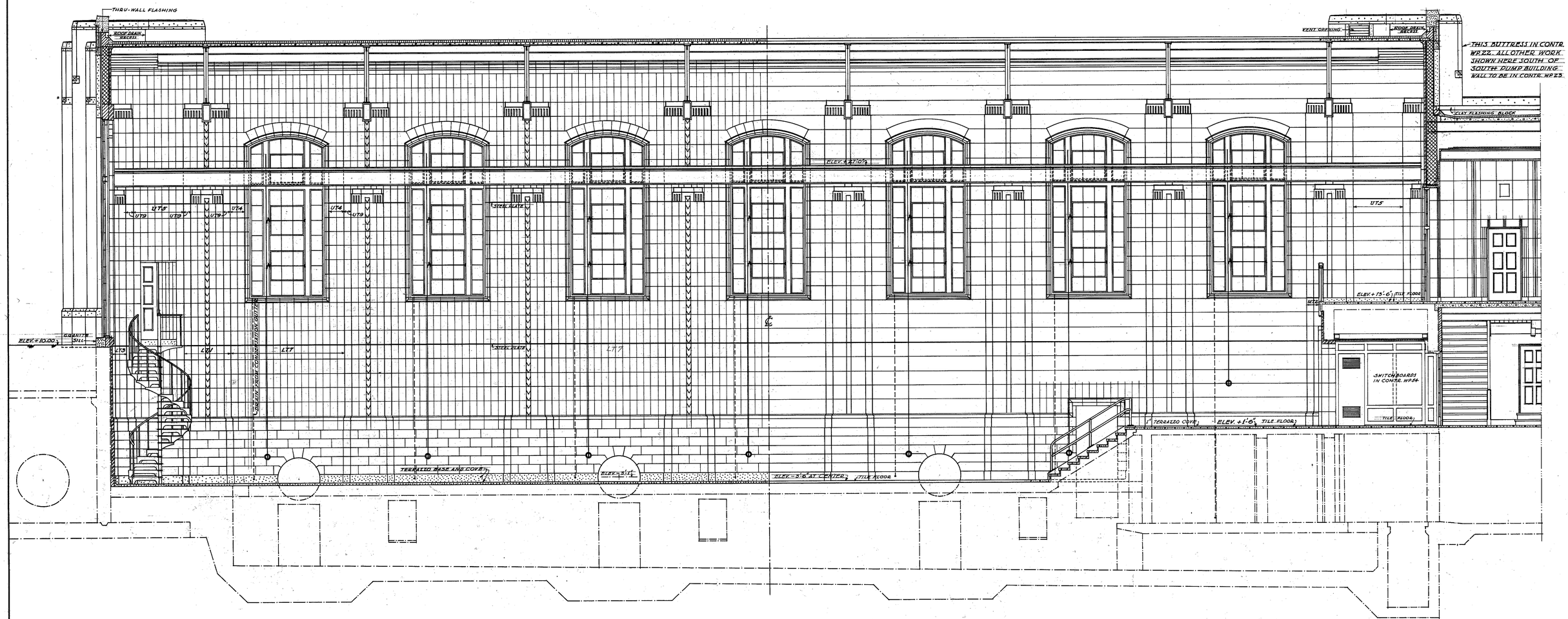

EAST WALL

0 5 10 15 20

SCALE IN FEET

CITY ENGINEER'S OFFICE, MILWAUKEE- WIS.
MILWAUKEE WATER WORKS

WATER PURIFICATION PLANT

PUMP BUILDING

EAST WALL

INTERIOR ELEVATION

APPROVED Alvord Burdick & Howson Consulting Engineers
APPROVED Herbert H. Brown Engineer in Charge
APPROVED R. E. Stoelting Comm. of Public Works
APPROVED J. Edwards City Engineer

DESIGNED BY W. W. JUDELL
DRAWN BY " " "
TRACED BY " " "
CHECKED BY F. A. WEGNER

DATE FEB. 1, 1937
SCALE AS SHOWN

MICROFILMED 12-9-71

FILE 3-9-1 DRWG. WP 22-5

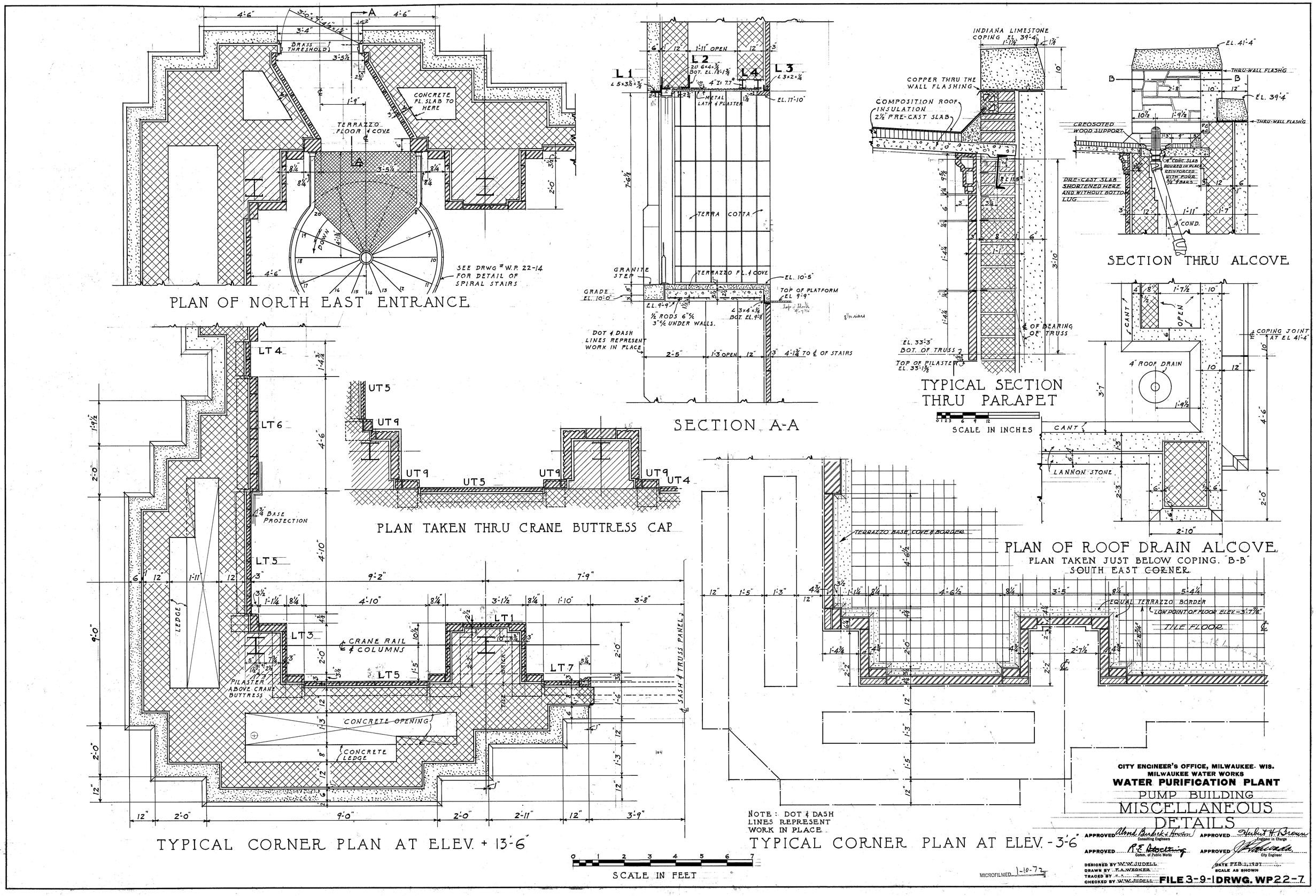
PLAN OF NORTH EAST ENTRANCE
BRASS THRESHOLD
CONCRETE FL. SLAB TO HERE
TERRAZZO FLOOR & COVE
DOWN
SEE DRWG # W.P. 22-14 FOR DETAIL OF SPIRAL STAIRS
SECTION A-A
L1
L2
L3
L4
METAL LATH & PLASTER
TERRA COTTA
GRANITE STEP
TERRAZZO FL. & COVE
GRADE EL. 10'-0"
TOP OF PLATFORM EL. 9'-9"
½" RODS 6" c/c 3" c/c UNDER WALLS.
DOT & DASH LINES REPRESENT WORK IN PLACE
4'-1¾" TO ℄ OF STAIRS
TYPICAL SECTION THRU PARAPET
INDIANA LIMESTONE COPING EL. 39'-4"
COPPER THRU THE WALL FLASHING
COMPOSITION ROOF INSULATION 2½" PRE-CAST SLAB
℄ OF BEARING OF TRUSS
EL. 33'-3" BOT. OF TRUSS
TOP OF PILASTER EL. 33'-1⅞"
SCALE IN INCHES
SECTION THRU ALCOVE
EL. 41'-4"
THRU-WALL FLASH'G
EL. 39'-4"
CREOSOTED WOOD SUPPORT
PRE-CAST SLAB SHORTENED HERE AND WITHOUT BOTTOM LUG
4" COND.
PLAN OF ROOF DRAIN ALCOVE
PLAN TAKEN JUST BELOW COPING. "B-B" SOUTH EAST CORNER
CANT
OPEN
4" ROOF DRAIN
℄ COPING JOINT AT EL 41'-4"
LANNON STONE
PLAN TAKEN THRU CRANE BUTTRESS CAP
UT5
UT9
UT4
TYPICAL CORNER PLAN AT ELEV. + 13'-6"
LT4
LT6
LT5
LT3
LT1
LT7
1¾" BASE PROJECTION
LEDGE
℄ CRANE RAIL & COLUMNS
PILASTER ABOVE CRANE BUTTRESS
CONCRETE OPENING
CONCRETE LEDGE
TILE BRICK
℄ SASH & TRUSS PANEL
TYPICAL CORNER PLAN AT ELEV. - 3'-6"
TERRAZZO BASE, COVE & BORDER
EQUAL TERRAZZO BORDER
LOW POINT OF FLOOR ELEV. - 3'-7⅞"
TILE FLOOR
NOTE: DOT & DASH LINES REPRESENT WORK IN PLACE
SCALE IN FEET
CITY ENGINEER'S OFFICE, MILWAUKEE- WIS.
MILWAUKEE WATER WORKS
WATER PURIFICATION PLANT
PUMP BUILDING
MISCELLANEOUS DETAILS
APPROVED Alvord Burdick & Howson Consulting Engineers
APPROVED Herbert H. Brown Engineer in Charge
APPROVED R.E. Stocking Comm. of Public Works
APPROVED City Engineer
DESIGNED BY W.W. JUDELL
DRAWN BY E.A. WEGNER
TRACED BY
CHECKED BY W.W. JUDELL
DATE FEB. 1, 1937
SCALE AS SHOWN
MICROFILMED 1-10-72
FILE 3-9-1 DRWG. WP22-7

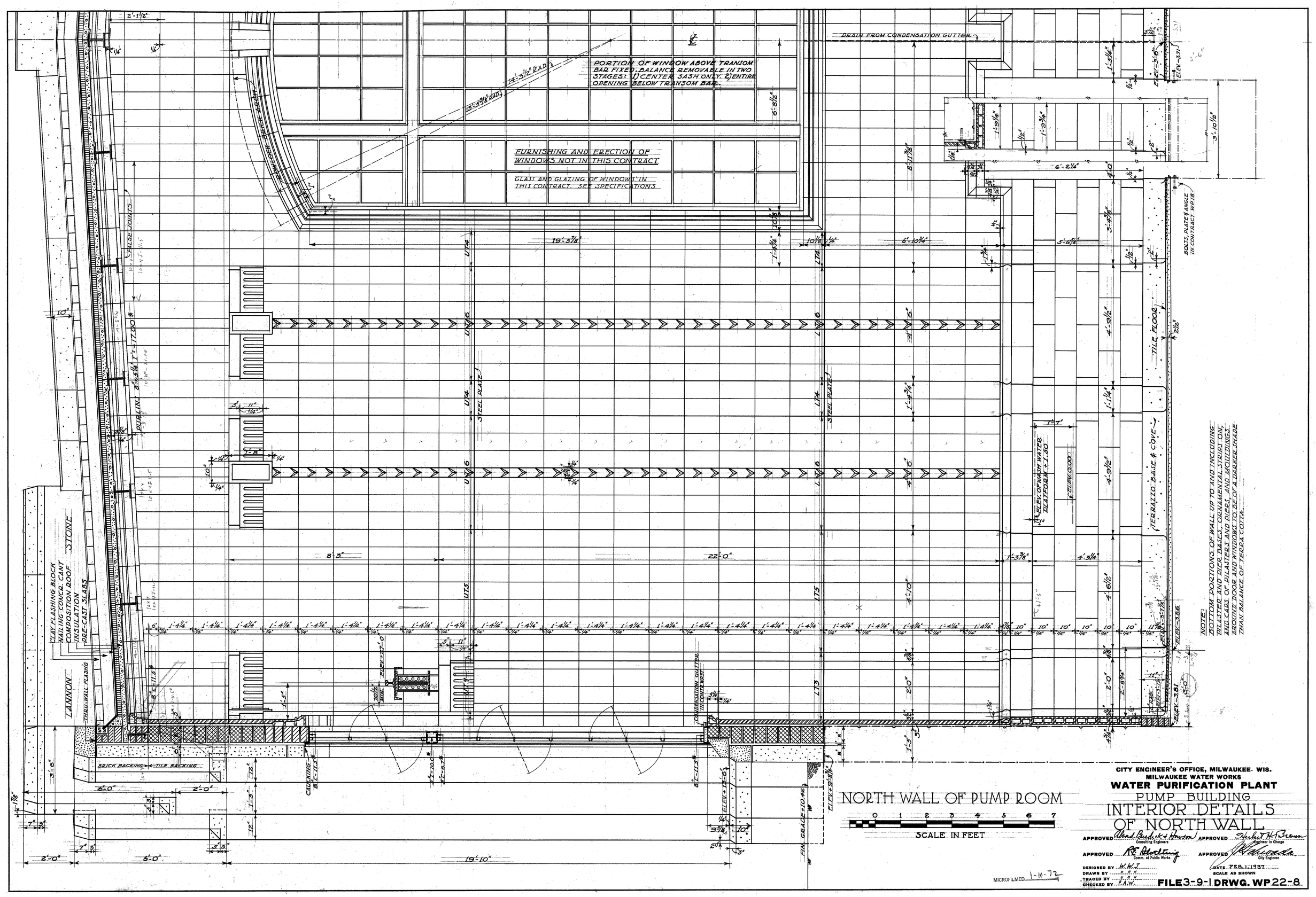

NOTE:
BOTTOM PORTIONS OF WALL UP TO AND INCLUDING PILASTER AND PIER BASES, ORNAMENTAL STRIPS ON, AND CAPS OF PILASTERS AND PIERS, AND MOULDINGS AROUND DOOR AND WINDOWS TO BE OF A DARKER SHADE THAN BALANCE OF TERRA COTTA.

NORTH WALL OF PUMP ROOM

0 1 2 3 4 5 6 7

SCALE IN FEET

CITY ENGINEER'S OFFICE, MILWAUKEE, WIS.
MILWAUKEE WATER WORKS

WATER PURIFICATION PLANT

PUMP BUILDING

INTERIOR DETAILS OF NORTH WALL

APPROVED Alvord Burdick & Howson, Consulting Engineers — APPROVED Herbert H. Brown, Engineer in Charge

APPROVED R.E. Stoltting, Comm. of Public Works — APPROVED [signature], City Engineer

DESIGNED BY W.W.J.
DRAWN BY " " "
TRACED BY " " "
CHECKED BY F.A.W.

DATE FEB. 1, 1937
SCALE AS SHOWN

MICROFILMED 1-10-72

FILE 3-9-1 DRWG. WP 22-8

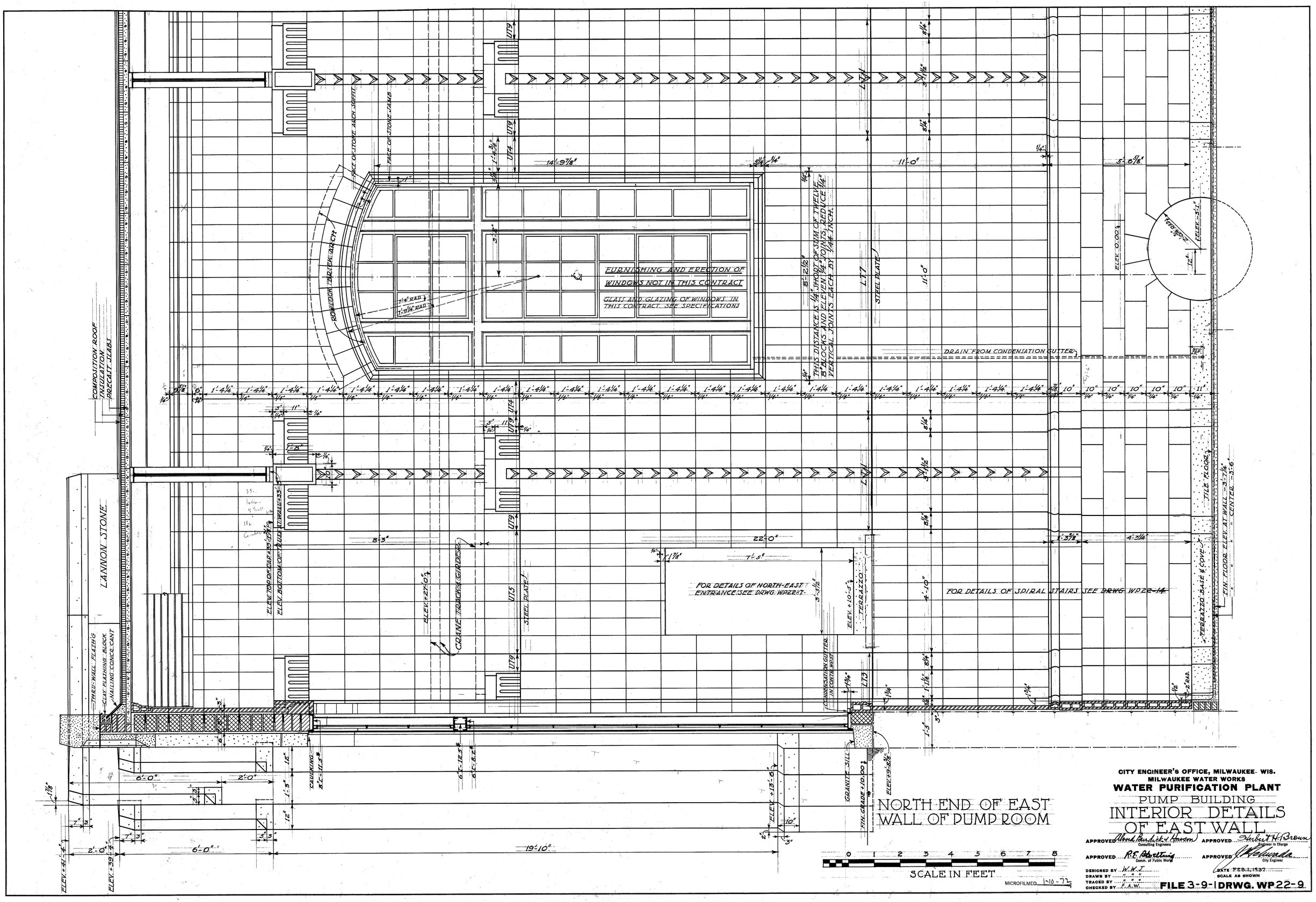

CITY ENGINEER'S OFFICE, MILWAUKEE- WIS.
MILWAUKEE WATER WORKS

WATER PURIFICATION PLANT

PUMP BUILDING

INTERIOR DETAILS OF EAST WALL

APPROVED Alvord, Burdick & Howson, Consulting Engineers — APPROVED Herbert H. Brown, Engineer in Charge

APPROVED R.F. Abertin, Comm. of Public Works — APPROVED C. Kelhunda, City Engineer

DESIGNED BY W.W.J.
DRAWN BY " " "
TRACED BY " " "
CHECKED BY E.A.W.

DATE FEB. 1, 1937
SCALE AS SHOWN

FILE 3-9-1 DRWG. WP22-9

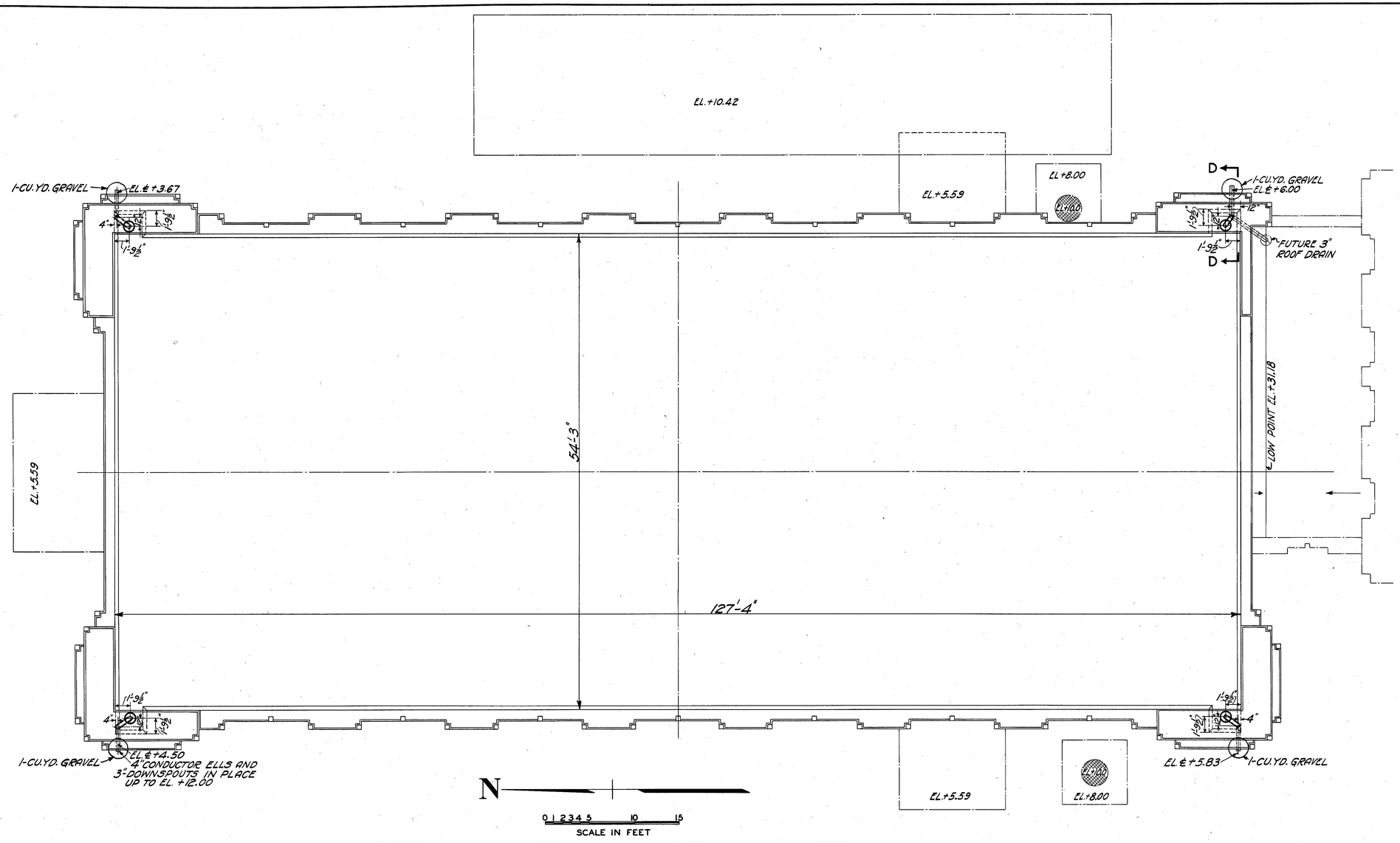

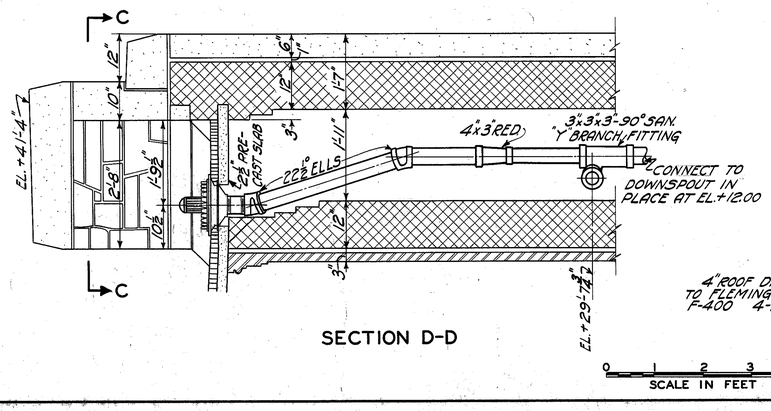

SECTION D-D

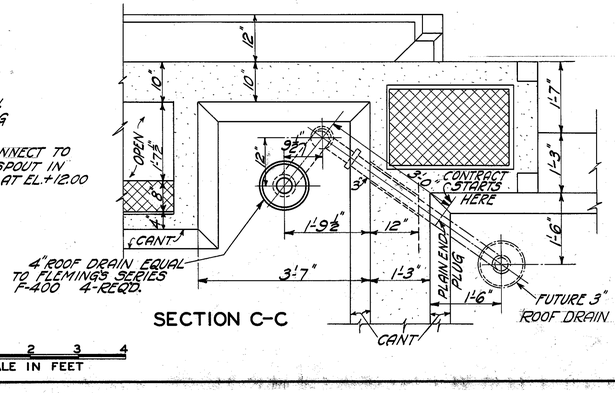

SECTION C-C

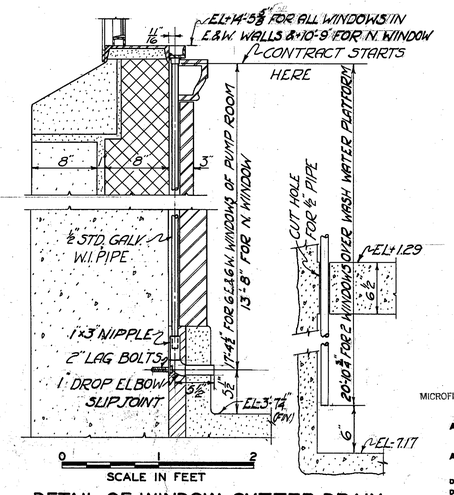

DETAIL OF WINDOW GUTTER DRAIN

CITY ENGINEER'S OFFICE, MILWAUKEE- WIS.
MILWAUKEE WATER WORKS

WATER PURIFICATION PLANT

PUMP BUILDING

PLUMBING

ROOF DRAINS

MICROFILMED 1-10-77

APPROVED Alvord, Burdick & Howson Consulting Engineers — APPROVED Herbert H. Brown Engineer in Charge

APPROVED R.E. Sterling Comm. of Public Works — APPROVED City Engineer

DESIGNED BY F. ROSSOW
DRAWN BY F. ROSSOW
TRACED BY J.E. JOHNSON
CHECKED BY A. RYNDERS

DATE 1-28-37
SCALE AS SHOWN

FILE 3-9-1 DRWG. WP22-18

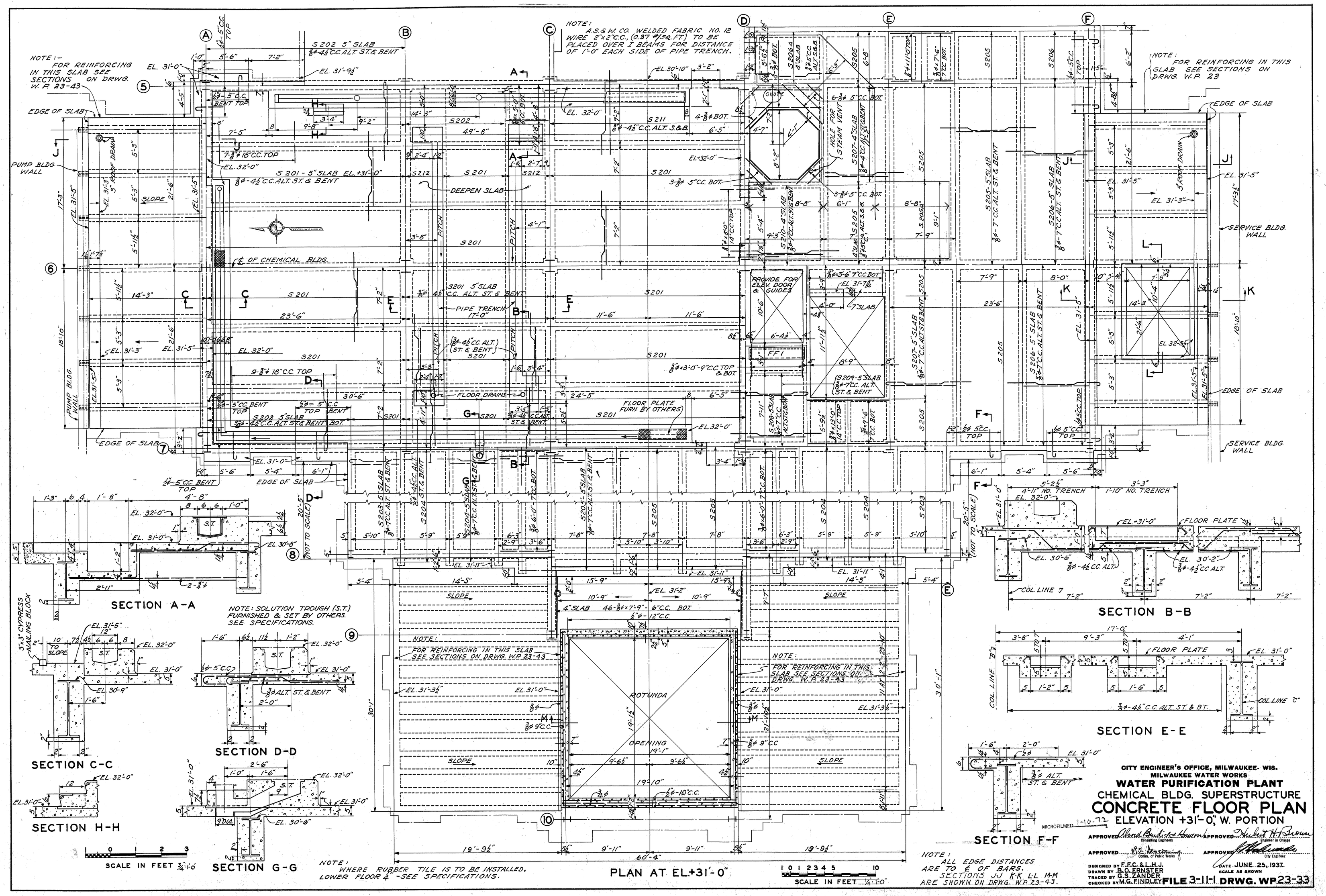
NOTE:- FOR REINFORCING IN THIS SLAB SEE SECTIONS ON DRWG. W.P. 23-43
NOTE: A.S.&W. CO. WELDED FABRIC NO. 12 WIRE 2"x2" C.C., (0.37 #/SQ.FT.) TO BE PLACED OVER I BEAMS FOR DISTANCE OF 1'-0" EACH SIDE OF PIPE TRENCH.
NOTE: FOR REINFORCING IN THIS SLAB SEE SECTIONS ON DRWG. W.P. 23
EDGE OF SLAB
PUMP BLDG. WALL
SERVICE BLDG. WALL
℄ OF CHEMICAL BLDG.
DEEPEN SLAB
PIPE TRENCH
FLOOR DRAINS
FLOOR PLATE FURN. BY OTHERS
PROVIDE FOR ELEV. DOOR & GUIDES
HOLE FOR STEAM VENT
SECTION A-A
SECTION B-B
SECTION C-C
SECTION D-D
SECTION E-E
SECTION F-F
SECTION G-G
SECTION H-H
NOTE: SOLUTION TROUGH (S.T.) FURNISHED & SET BY OTHERS. SEE SPECIFICATIONS.
NOTE: FOR REINFORCING IN THIS SLAB SEE SECTIONS ON DRWG. W.P. 23-43
ROTUNDA
OPENING
NOTE: WHERE RUBBER TILE IS TO BE INSTALLED, LOWER FLOOR 4" - SEE SPECIFICATIONS.
PLAN AT EL.+31'-0"
SCALE IN FEET 1/4"=1'-0"
NOTE: ALL EDGE DISTANCES ARE TO ℄ OF BARS. SECTIONS J-J K-K L-L M-M ARE SHOWN ON DRWG. W.P. 23-43.
CITY ENGINEER'S OFFICE, MILWAUKEE, WIS.
MILWAUKEE WATER WORKS
WATER PURIFICATION PLANT
CHEMICAL BLDG. SUPERSTRUCTURE
CONCRETE FLOOR PLAN
ELEVATION +31'-0", W. PORTION
MICROFILMED 1-10-72
APPROVED Alvord Burdick & Howson Consulting Engineers
APPROVED Herbert H. Brown Engineer in Charge
APPROVED R.E. Ferring Comm. of Public Works
APPROVED City Engineer
DESIGNED BY F.F.C. & L.H.J.
DRAWN BY B.O. ERNSTER
TRACED BY G.S. ZANDER
CHECKED BY M.G. FINDLEY
DATE JUNE 25, 1937.
SCALE AS SHOWN
FILE 3-11-1 DRWG. WP 23-33

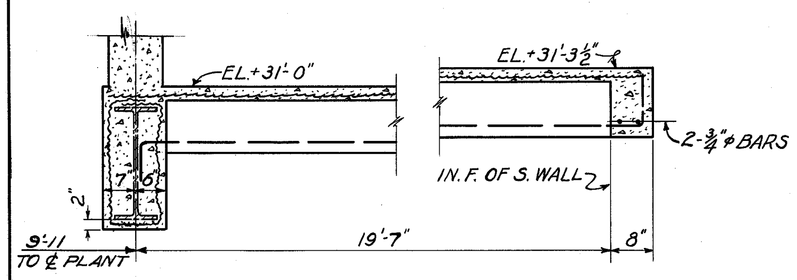

SECTION B-B

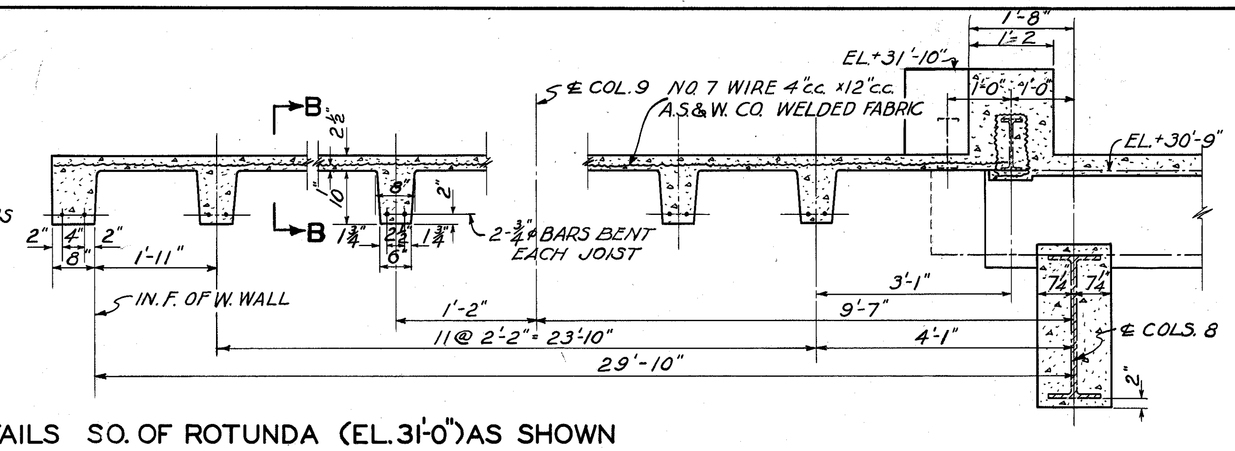

ROOF SLAB DETAILS SO. OF ROTUNDA (EL. 31'-0") AS SHOWN
" " " NO. " " (" ") OPP. HAND
SEE DRWG. WP-23-33

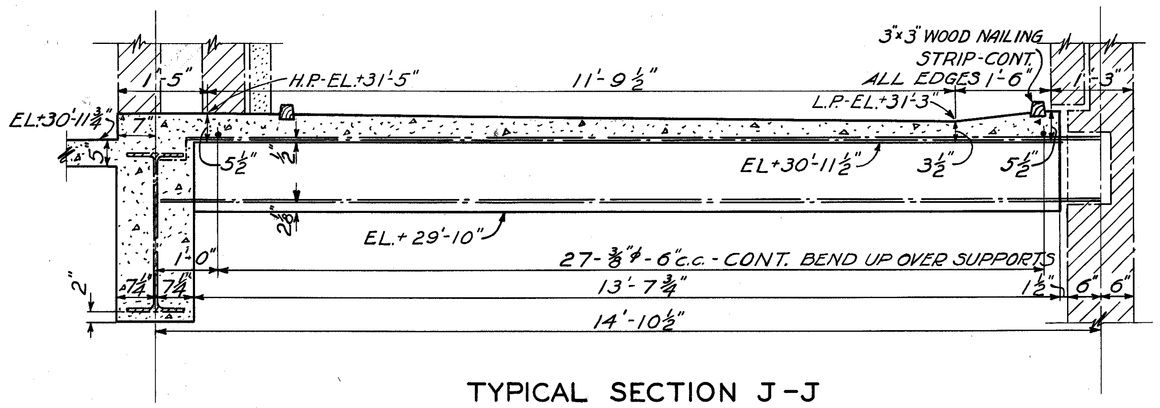

TYPICAL SECTION J-J

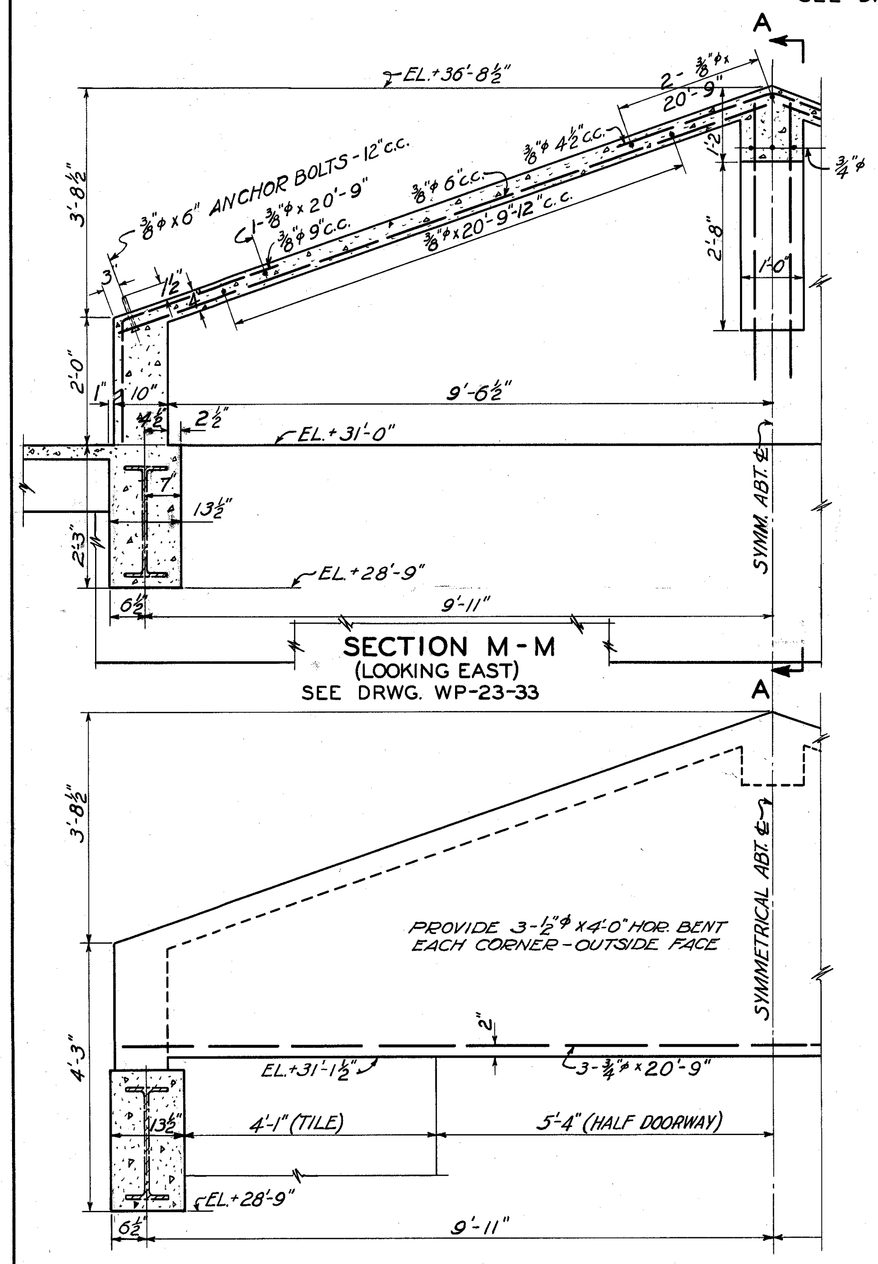

SECTION M-M
(LOOKING EAST)
SEE DRWG. WP-23-33

WEST ELEVATION

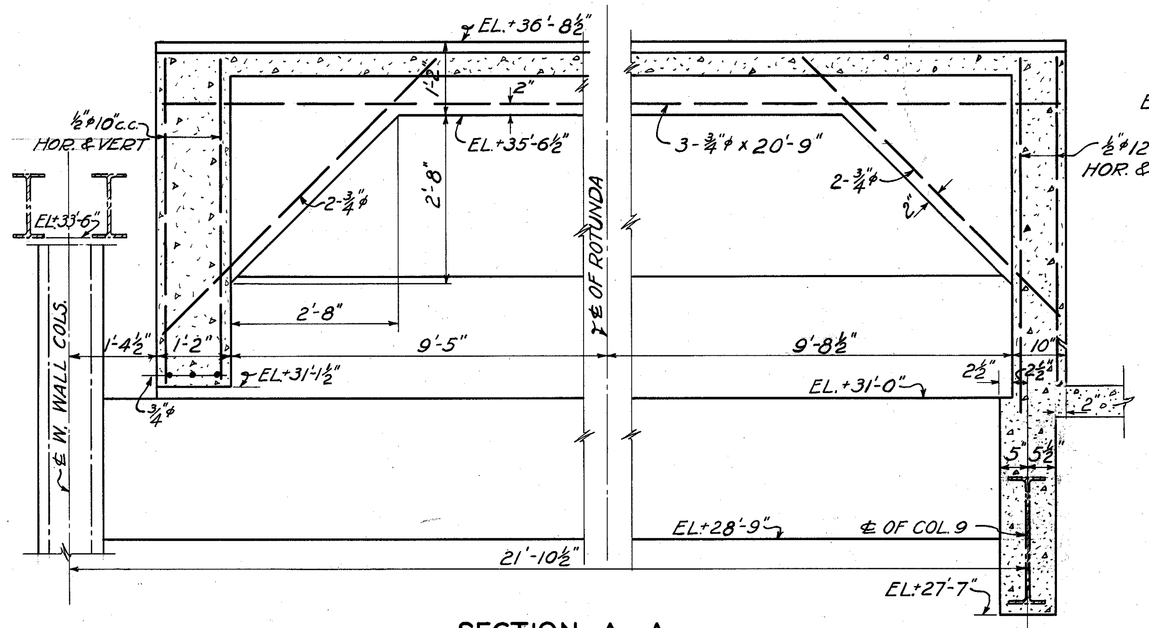

SECTION A-A
(LOOKING NORTH)

DETAILS OF ROTUNDA ROOF

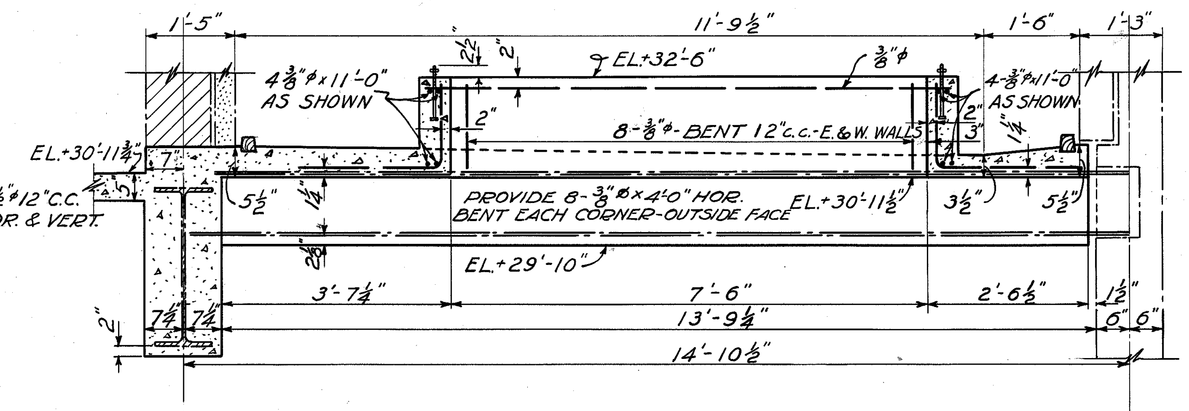

SECTION K-K

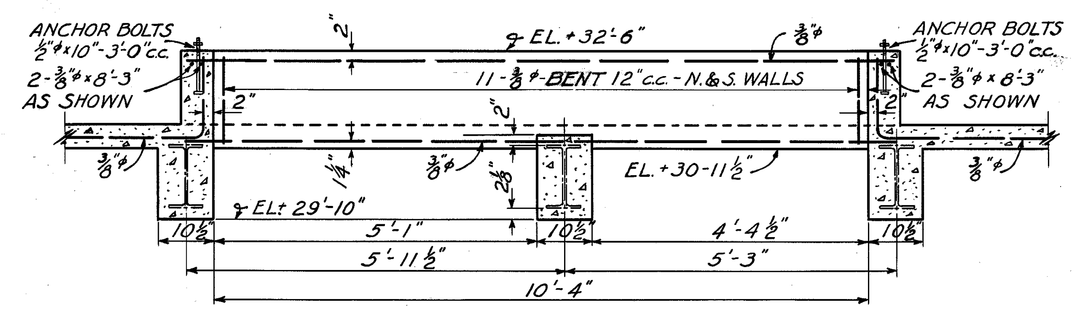

SECTION L-L

ROOF DETAILS AT SERVICE BLDG. & PUMP BLDG.
FOR LOCATION OF SECTIONS J-J, K-K & L-L,
SEE DRWG. WP-23-33

NOTE
FOR LOCATION OF ROOF SECTIONS
SEE DRAWING W. P. 23-C5.

0 1 2 3 4 5
SCALE IN FEET ¾" = 1'-0"

MICROFILMED 1-16-72

CITY ENGINEER'S OFFICE, MILWAUKEE- WIS.
MILWAUKEE WATER WORKS
WATER PURIFICATION PLANT
CHEMICAL BLDG. SUPERSTRUCTURE
CONCRETE ROOF DETAILS
ROTUNDA AND ADJACENT SLABS

APPROVED Alford, Burdick & Howson (Consulting Engineers) APPROVED Herbert H. Brown (Engineer in Charge)
APPROVED R. E. Hoerting (Comm. of Public Works) APPROVED J. Richards (City Engineer)

DESIGNED BY F.F.C. & L.H.J.
DRAWN BY F.F. COOPER
TRACED BY E.A. SCHELLIN
CHECKED BY M.G. FINDLEY
DATE JUNE 25, 1937
SCALE AS SHOWN
FILE 3-11-1 DRWG. WP23-43

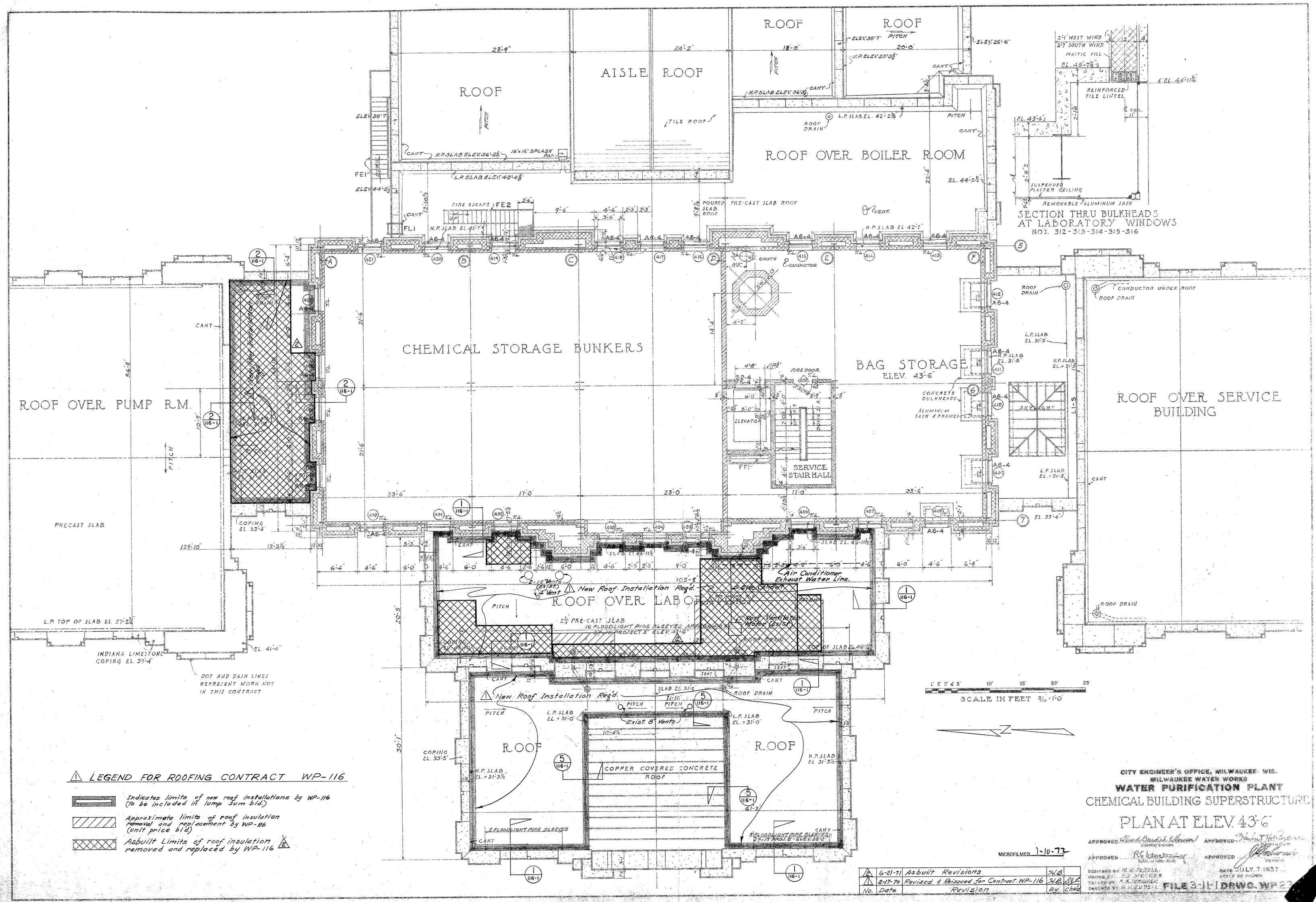
ROOF
AISLE ROOF
ROOF
ROOF
ROOF OVER BOILER ROOM
SECTION THRU BULKHEADS AT LABORATORY WINDOWS
NO'S. 312-313-314-315-316
CHEMICAL STORAGE BUNKERS
BAG STORAGE
ELEV. 43'-6"
ROOF OVER PUMP R.M.
ROOF OVER SERVICE BUILDING
SERVICE STAIR HALL
ROOF OVER LABORATORY
New Roof Installation Req'd.
Air Conditioner Exhaust Water Line.
COPPER COVERED CONCRETE ROOF
PRECAST SLAB
INDIANA LIMESTONE COPING EL. 39'-4"
DOT AND DASH LINES REPRESENT WORK NOT IN THIS CONTRACT
SCALE IN FEET 3/16 = 1'-0"
LEGEND FOR ROOFING CONTRACT WP-116
Indicates limits of new roof installations by WP-116 (To be included in lump sum bid.)
Approximate limits of roof insulation removal and replacement by WP-116 (unit price bid.)
Asbuilt Limits of roof insulation removed and replaced by WP-116
CITY ENGINEER'S OFFICE, MILWAUKEE, WIS.
MILWAUKEE WATER WORKS
WATER PURIFICATION PLANT
CHEMICAL BUILDING SUPERSTRUCTURE
PLAN AT ELEV. 43'-6"
MICROFILMED 1-10-72
6-21-71 Asbuilt Revisions
2-17-70 Revised & Reissued for Contract WP-116
No. Date Revision By Chk'd
DATE JULY 7 1937
FILE 3-11-1 DRWG. WP 23

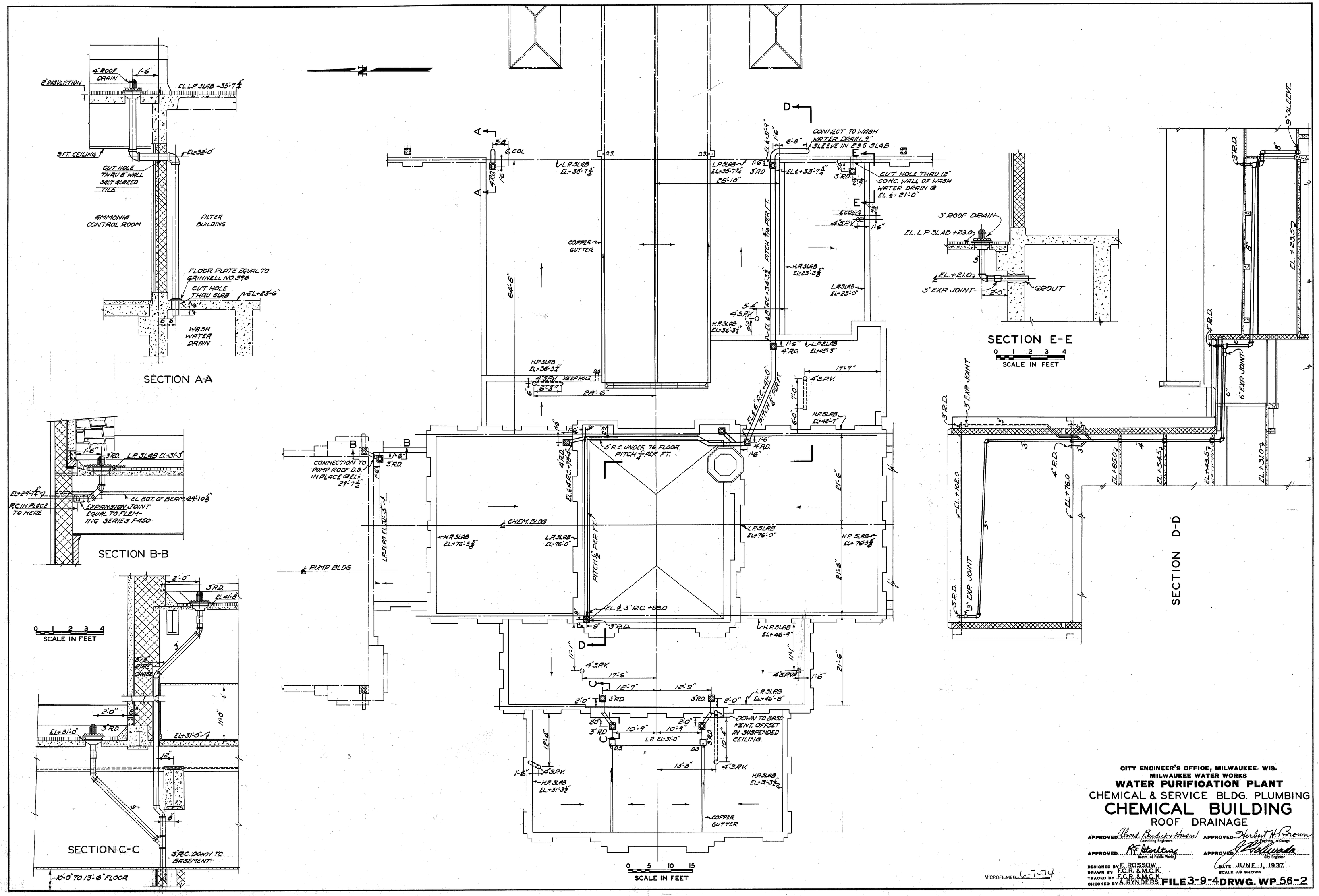

CITY ENGINEER'S OFFICE, MILWAUKEE- WIS.
MILWAUKEE WATER WORKS
WATER PURIFICATION PLANT
CHEMICAL & SERVICE BLDG. PLUMBING
CHEMICAL BUILDING
ROOF DRAINAGE

APPROVED Alvord Burdick & Howson, Consulting Engineers — APPROVED Herbert H. Brown, Engineer in Charge
APPROVED R. F. Stoltzing, Comm. of Public Works — APPROVED J. Schwada, City Engineer

DESIGNED BY F. ROSSOW
DRAWN BY F.C.R. & M.C.K.
TRACED BY F.C.R. & M.C.K.
CHECKED BY A. RYNDERS

DATE JUNE 1, 1937
SCALE AS SHOWN

FILE 3-9-4 DRWG. WP 56-2

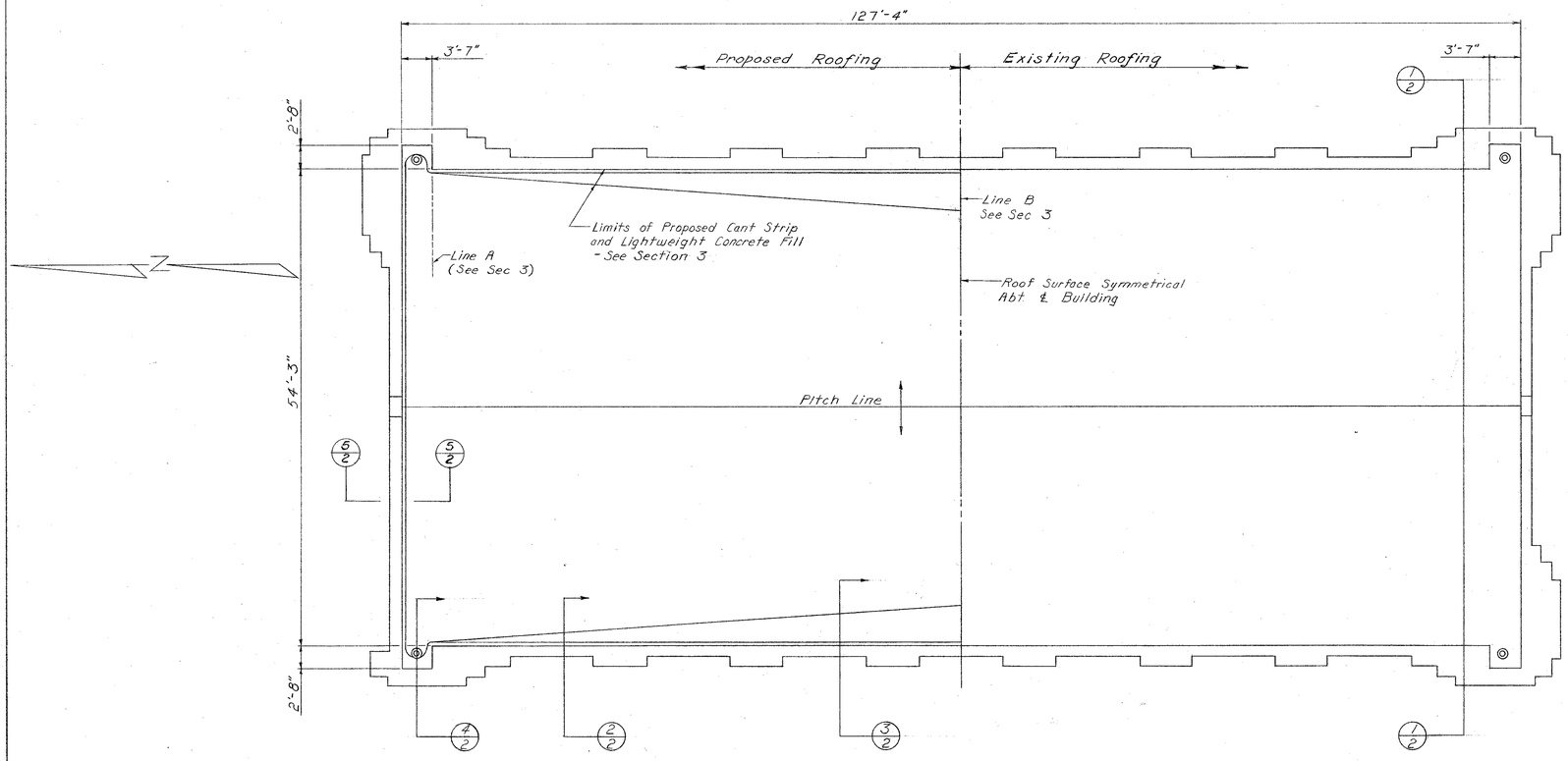

PUMP BUILDING ROOF PLAN (ROOF M)
scale 1/8" = 1'-0"

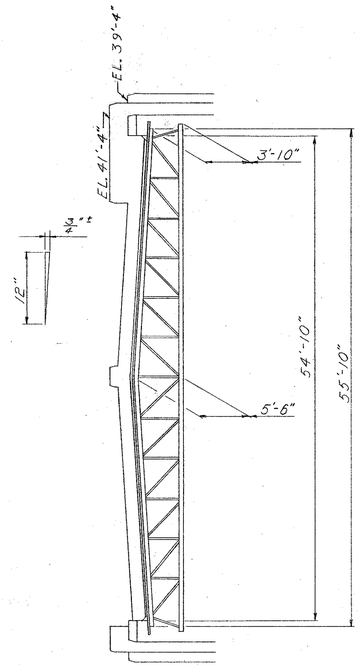

SECTION 1
scale 1/8" = 1'-0"

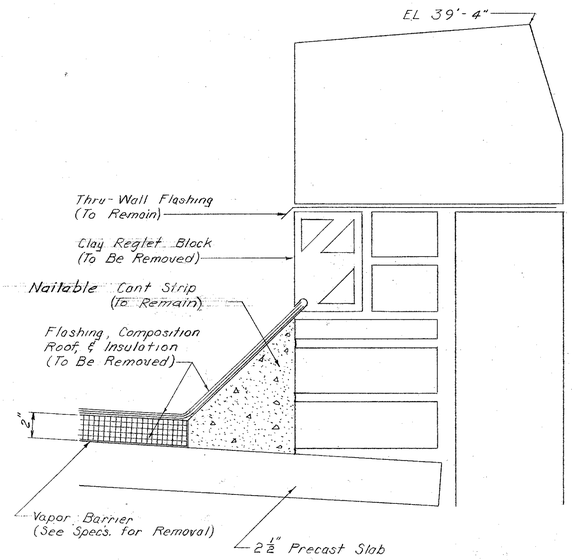

EXISTING SECTION 2
scale 3" = 1'-0"

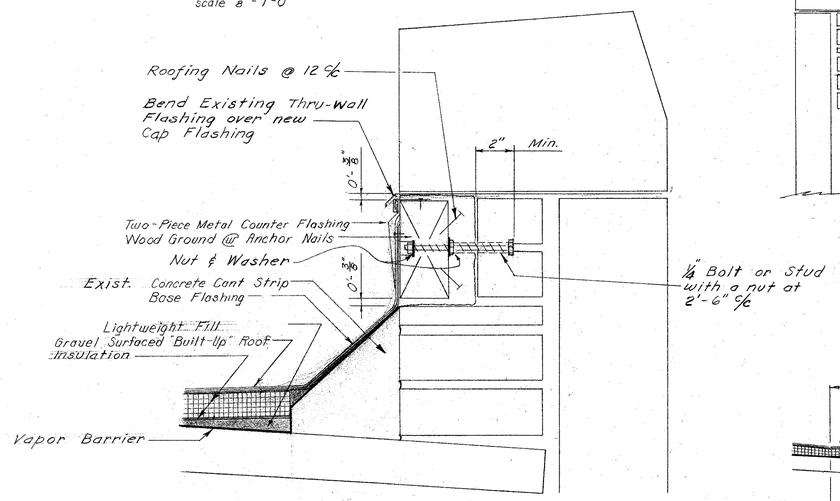

PROPOSED SECTION 2
scale 3" = 1'-0"

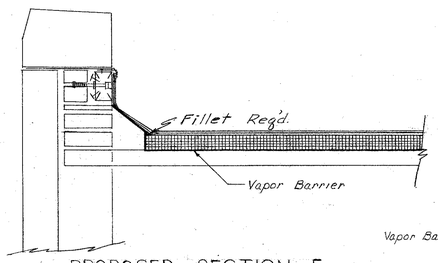

PROPOSED SECTION 5
scale 1" = 1'-0"

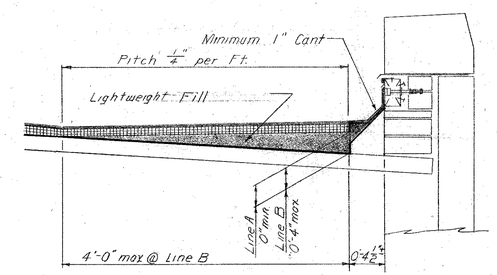

PROPOSED SECTION 3
scale 1" = 1'-0"

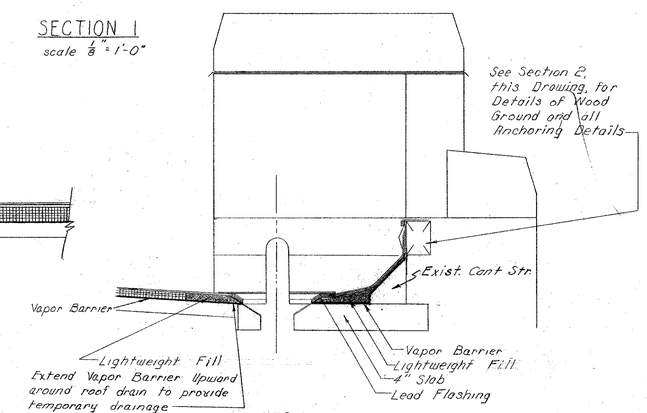

SECTION 4
scale 1" = 1'-0"

WISCONSIN
WILLIAM HAMMANN
MILWAUKEE, WIS.
PROFESSIONAL ENGINEER

MICROFILMED 6-11-74

WATER ENGINEERING DIVISION
BUREAU OF ENGINEERS
MILWAUKEE WATER WORKS
DEPARTMENT OF PUBLIC WORKS

LINNWOOD PURIFICATION PLANT
PUMP BUILDING
ROOF REHABILITATION

APPROVED _____ APPROVED Wm Hammann
ENGINEER IN CHARGE
APPROVED Donald D. Loetzig 6/7/65 APPROVED Hubert D. McCullough
SPEC. DEPUTY COMM. OF PUBLIC WORKS — CITY ENGINEER

DESIGNED BY R.E.R.
DRAWN BY R.E.R.
TRACED BY R.E.R. & H.B.
CHECKED BY _____ FILE 3-11-9
DATE Feb. 25, 1965
SCALE As Shown
DRWG. WP-94-2

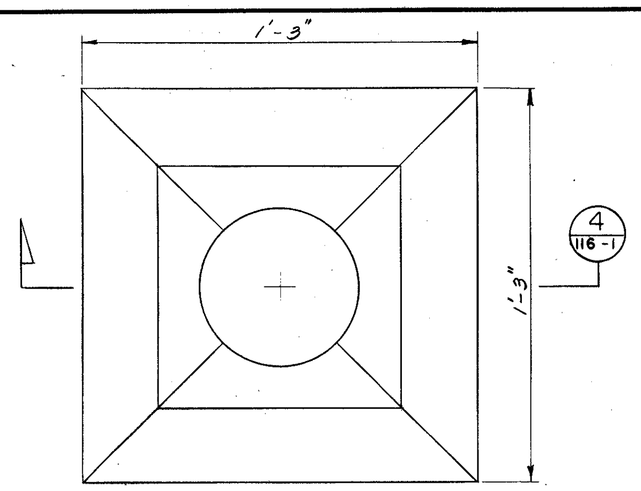

ROOF VENTILATION VENT PLAN

SCALE: 3" = 1'-0"

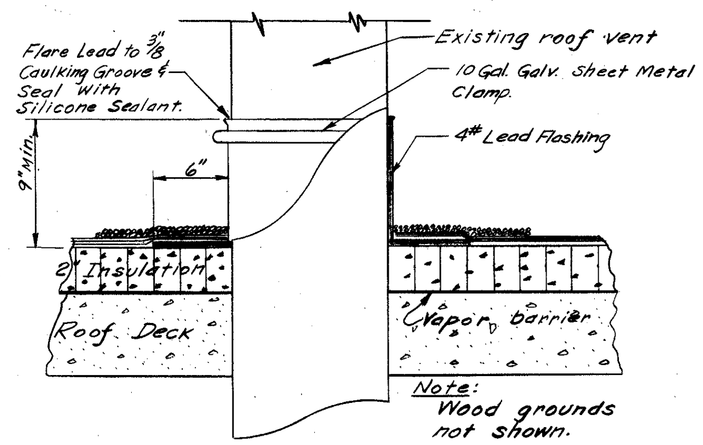

TYPICAL VENT FLASHING DETAIL

SCALE: 1½" = 1'-0"

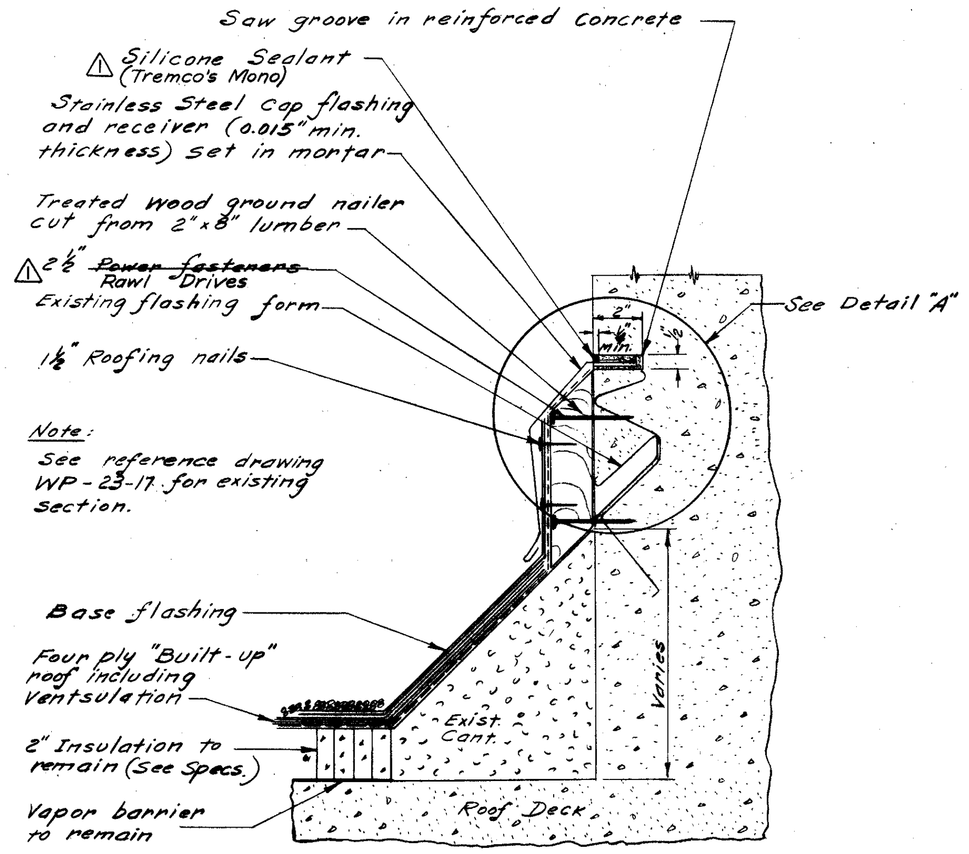

FLASHING DETAIL AT ROTUNDA 5 / 23-5

SCALE: 3" = 1'-0"

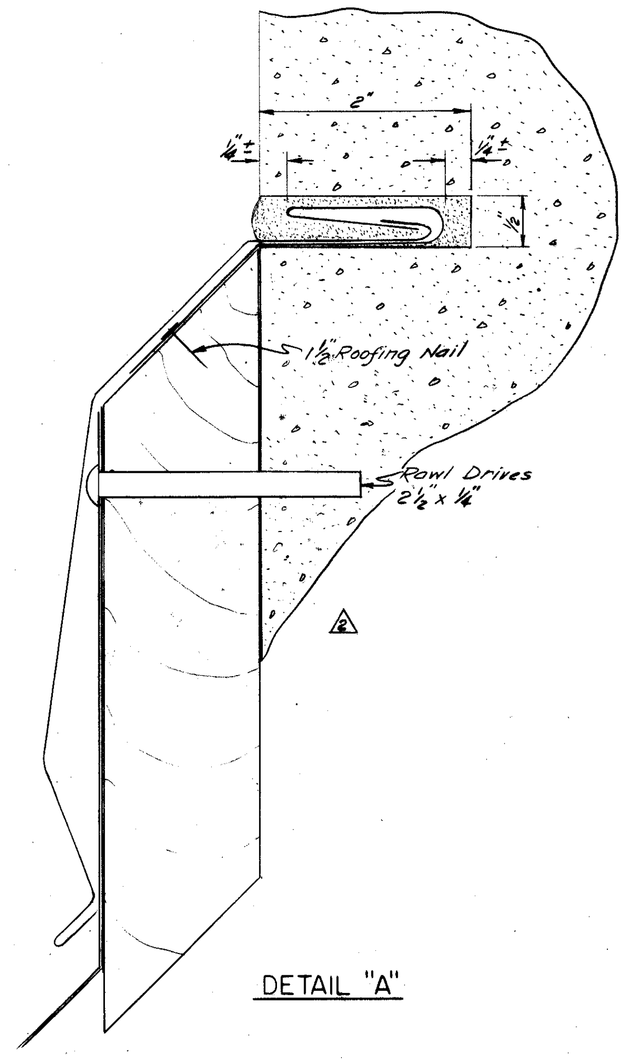

DETAIL "A"

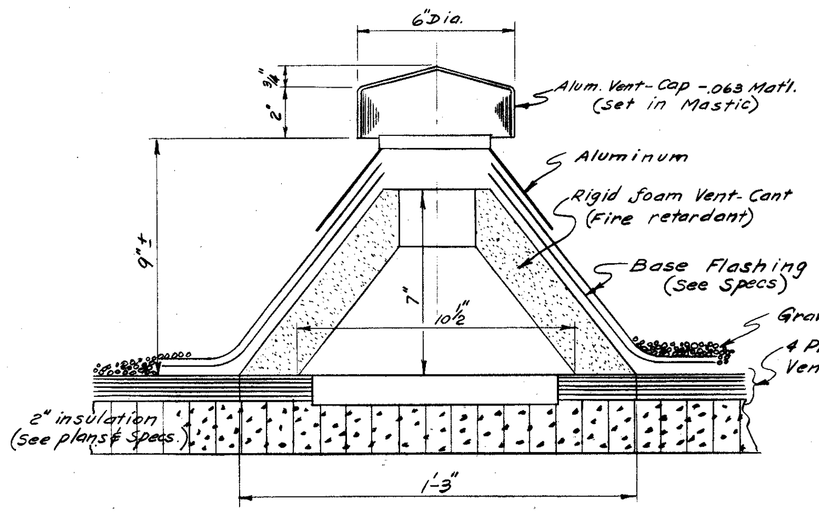

SECTION 4 / 23-6 4 / 24-2 4 / 116-1

SCALE: 3" = 1'-0"

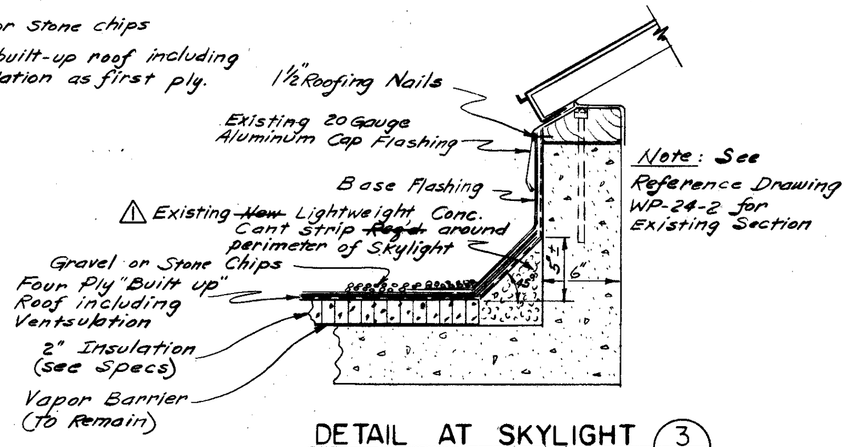

DETAIL AT SKYLIGHT 3 / 24-2

SCALE: 1½" = 1'-0"

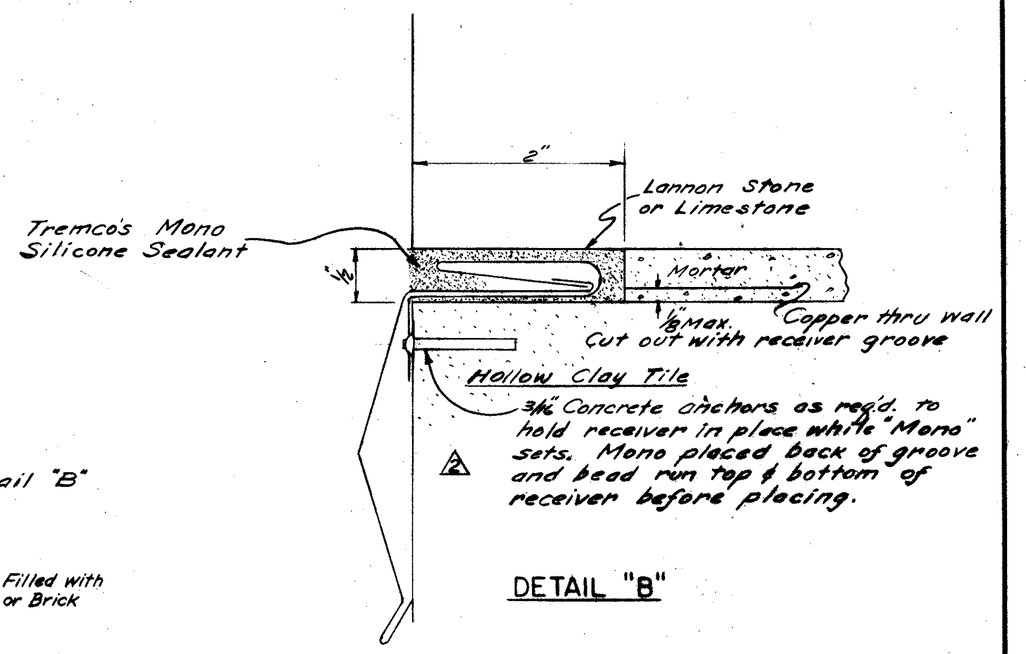

DETAIL "B"

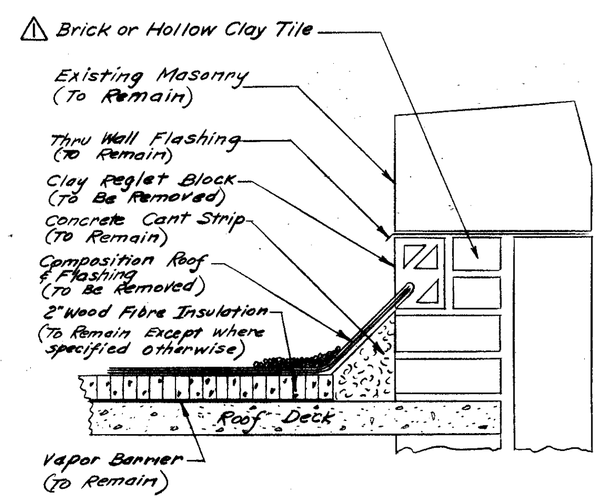

TYPICAL EXISTING SECTION

SCALE: 1½" = 1'-0"

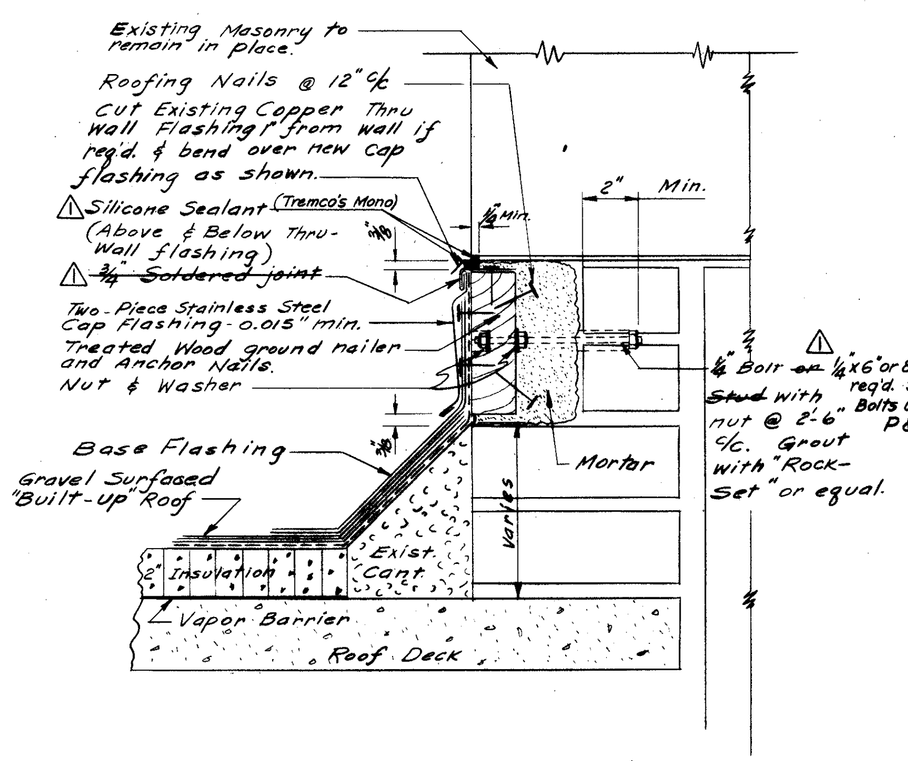

TYPICAL FLASHING DETAIL 1 / 23-5 1 / 23-6 1 / 23-9 1 / 24-2

SCALE: 3" = 1'-0"

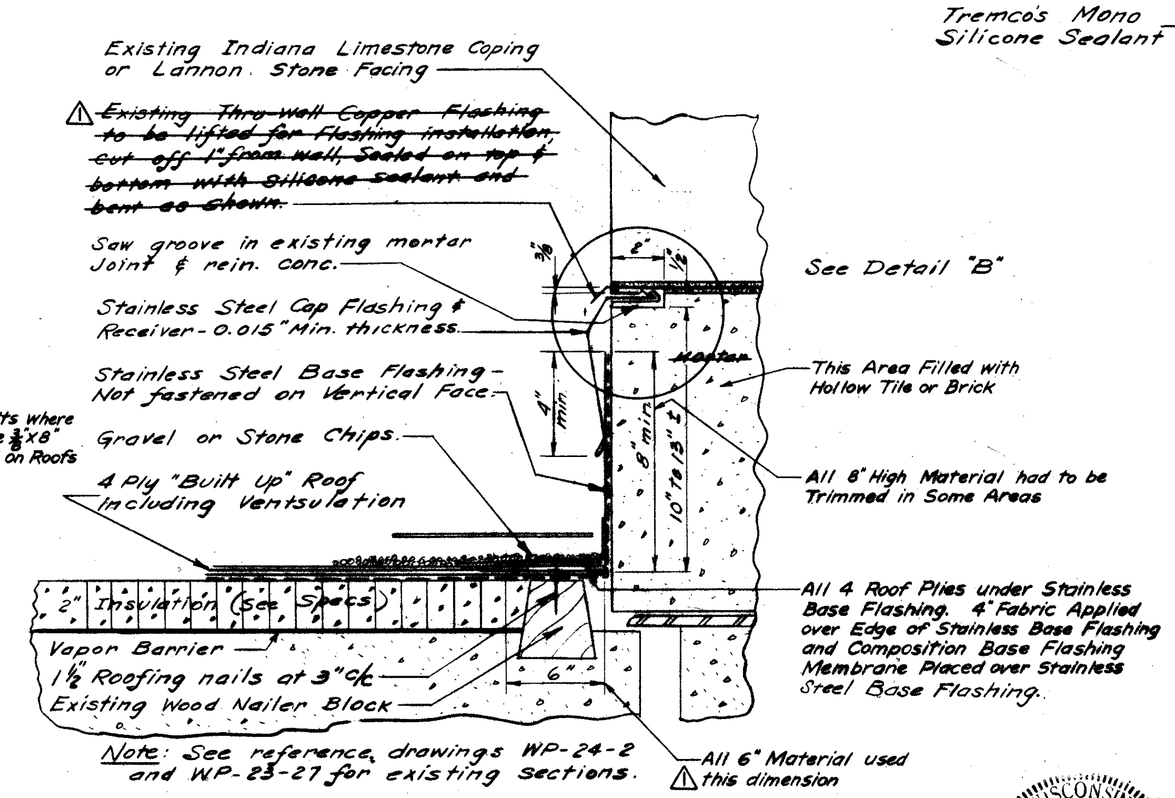

Note: See reference drawings WP-24-2 and WP-23-27 for existing sections.

TYPICAL FLASHING FOR ROOFS N & T 2 / 23-5 2 / 24-2

SCALE: 3" = 1'-0"

WISCONSIN RAYMOND J. KOCOL E-6221 MILWAUKEE, WIS. PROFESSIONAL ENGINEER

No.	Date	Revision	By	Chkd
6	6-9-71	As built & Revisions	MFB	
1		As-Built Revisions	C.A.W.	

WATER ENGINEERING DIVISION
BUREAU OF ENGINEERS
MILWAUKEE WATER WORKS
DEPARTMENT OF PUBLIC WORKS

LINNWOOD PURIFICATION PLANT

ROOF FLASHING DETAILS

CHEMICAL-SERVICE & ADJOINING BLDG'S

APPROVED Robert H. Barnes (PLANT DESIGN ENGINEER) APPROVED R. J. Kocol (DIVISION OF ENGINEERS) 3/5/70

APPROVED Donald W. Reddy (SUPER. DEPUTY COMMISSIONERS OF PUBLIC WORKS) APPROVED Walter D. McCullough (CITY ENGINEER)

DESIGNED BY AJG
DRAWN BY AJG
TRACED BY Frank B.
CHECKED BY AJG

DATE 2-24-70
SCALE AS SHOWN
FILE 3-11-12 DRWG. WP-116-1

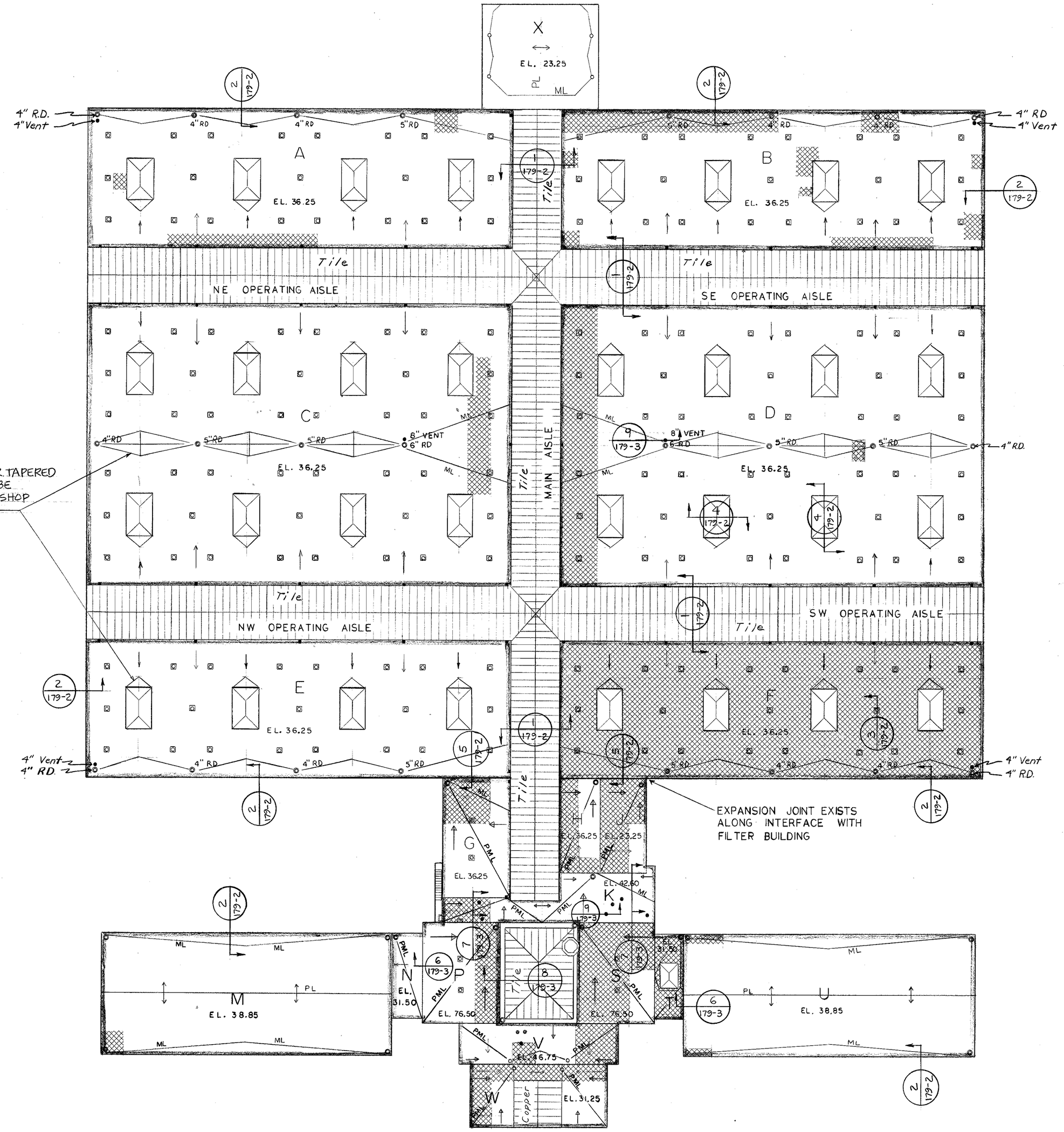

ROOF PLAN

SCALE 1" = 25'-0"

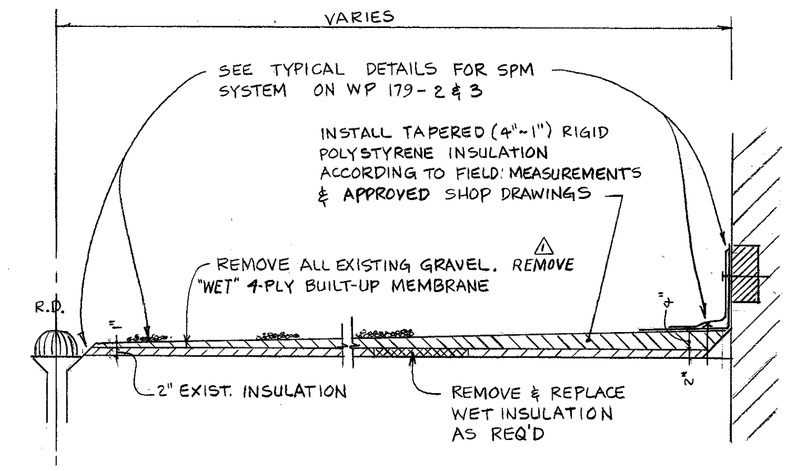

TYPICAL SECTION - WALL TO ROOF DRAIN

NTS

△ TABLE A

ROOF	BUILDING	DIMENSIONS	TOTAL AREA	SKYLIGHTS	ESTIMATED WET AREA	FLASHING & SS COUNT'R FLASHING
A	FILTER	62'x 182'	10,268 SF	4 x 12' x 20'	600 ± SF	780 ± LF
B	"	62'x 182'	10,268	"	850 "	780 "
C	"	125'x 182'	20,718	8 x 12 x 20	800 "	1,135 "
D	"	" "	"	"	2,000 "	1,135 "
E	"	62'x 182'	10,268	4 x 12 x 20	—	780 "
F	"	" "	"	"	10,500 "	780 "
G	CONNECTING	27'x 51'	1377	—	500 "	160 "
H	"	17'x 41'	697	—	550 "	120 "
J	"	18'x 41'	738	—	800 "	120 "
K	BOILER	11x52' + 20'x40'	1370	—	300 "	250 "
M	PUMP	54'x 128'	6912	—	150 "	365 "
N	"	13'x 35'	455	—	—	95 "
P	CHEMICAL	32'x 42'	1344	—	550 "	150 "
S	"	31'x 42'	1300	—	1,200 "	150 "
T	SERVICE	12'x 35'	312	8 x 12	500 "	95 "
U	"	54'x 128'	6912	—	200 "	365 "
V	LAB	18'x 70'	1260	—	500 "	175 "
W	FRONT	6'x21' + 28x36	1134	25 x 25	600 "	185 "
X	PUMP	50'x 50'	2500	NONE	N.W.R.	N.W.R.

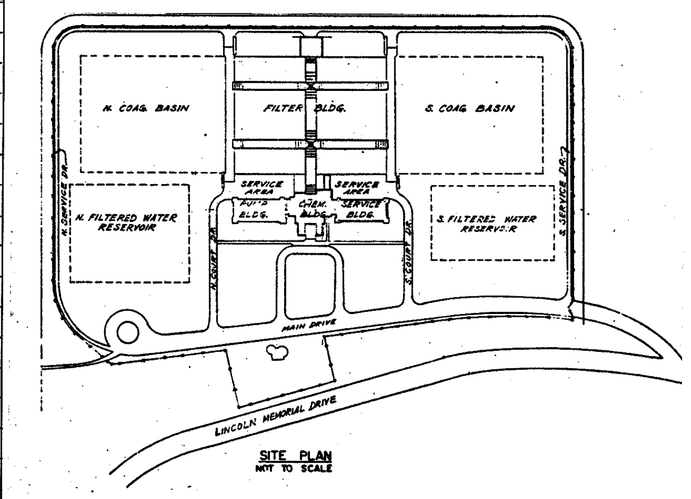

SITE PLAN
NOT TO SCALE

ROOF SURVEY LEGEND △	
○	ROOF DRAIN
•	BUILDING VENT
⊡	ROOFING VENT
ML	MATCH LINE (EXIST)
PL	PITCH LINE
→	PROPOSED PITCH
	SKYLIGHT
→	PITCH
PML	PROPOSED MATCH LINE (FLOW LINE)
	LADDER
▪	DOWNSPOUT AND 16"x16" SPLASH PLATE
	WET INSULATION AREA (ESTIMATE)
NWR	NO WORK REQ'D

△ NOTE: The Roof Plan and Table A include the results of an Infra-Red Survey conducted in 1984. See the Removals Section of the Specifications.

WISCONSIN RAYMOND J. KOCOL E-6271 MILWAUKEE, WIS. PROFESSIONAL ENGINEER

No.	Date	Revision	By	Chkd
△	5-28-87	Formerly WP-176-1 Reissued as WP-179-1	RJK	AVS

WATER ENGINEERING DIVISION
BUREAU OF ENGINEERS
MILWAUKEE WATER WORKS
DEPARTMENT OF PUBLIC WORKS

LINNWOOD PURIFICATION PLANT
BUILDINGS ROOF PLAN

APPROVED A V Dimeno 3/13/87 (PLANT DESIGN ENGINEER) APPROVED R J Kocol 3/16/87 (ENGINEER IN CHARGE)
APPROVED James C Fuszard 3/17/87 (SPEC. DEPUTY COMMISSIONER OF PUBLIC WORKS) APPROVED Edward J. Fuszard (CITY ENGINEER)

DESIGNED BY AVS
DRAWN BY JAN / WY
TRACED BY
CHECKED BY AVS
DATE 8-14-86
SCALE AS SHOWN
FILE 3-11-25 DRWG. WP-179-1

MICROFILMED _____

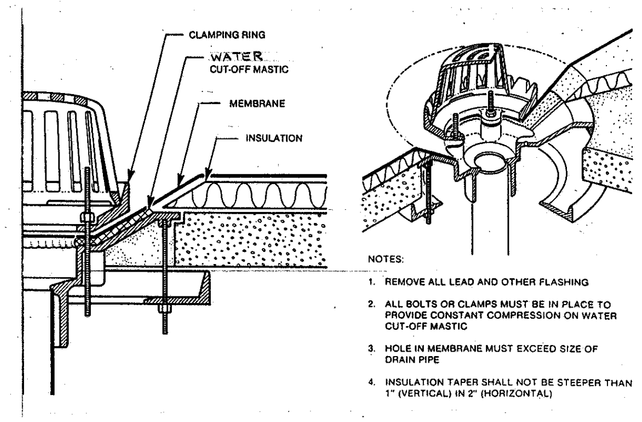

TYPICAL ROOF DRAIN (PROPOSED) △

NTS

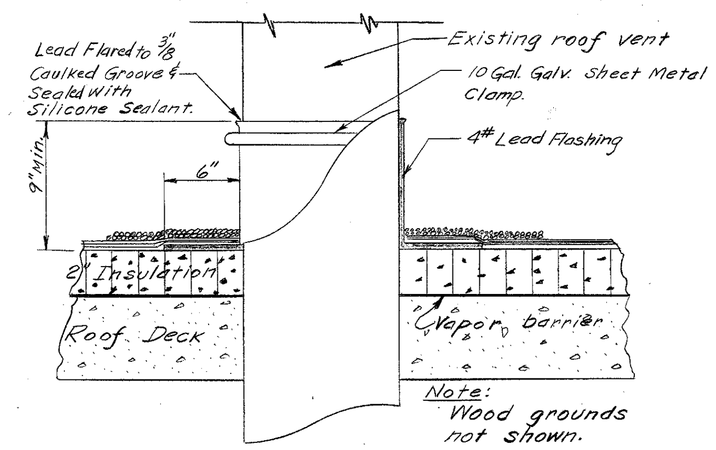

9 / 179-1 TYPICAL VENT FLASHING DETAIL (EXISTING)

SCALE: 1½" = 1'-0"

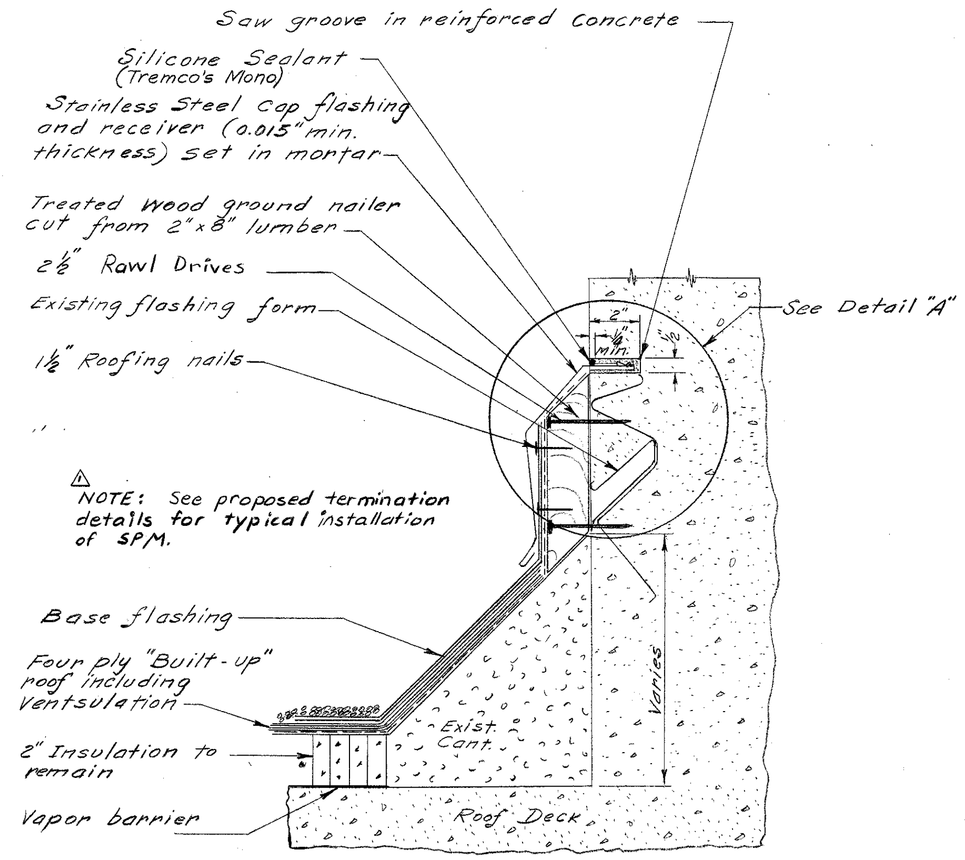

8 / 179-1 FLASHING DETAIL AT ROTUNDA (EXISTING)

SCALE: 3" = 1'-0"

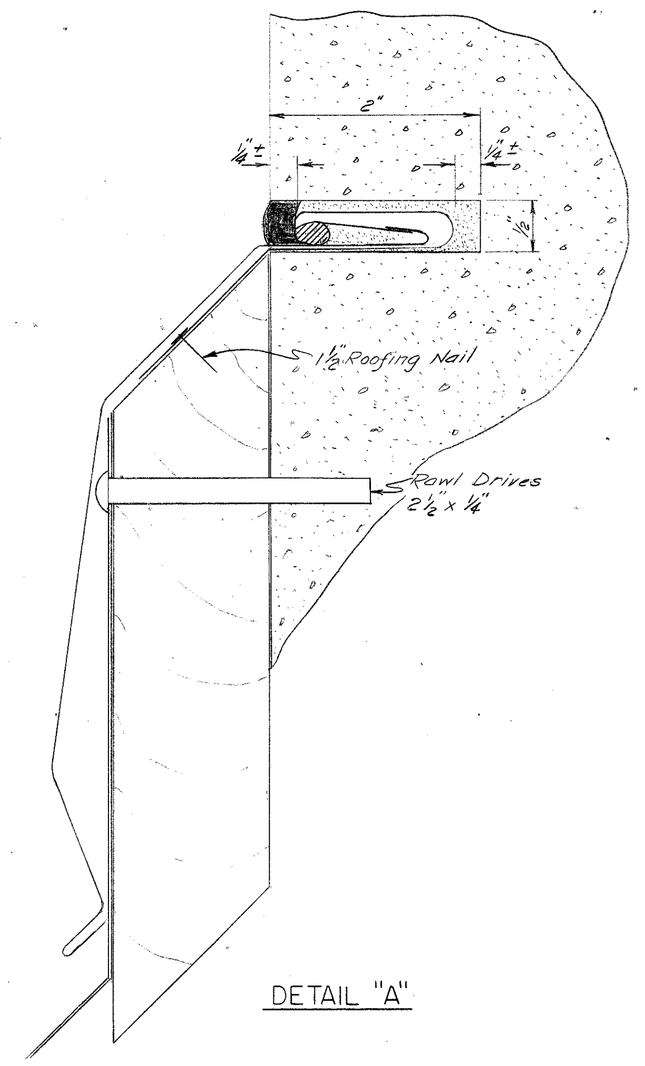

DETAIL "A"

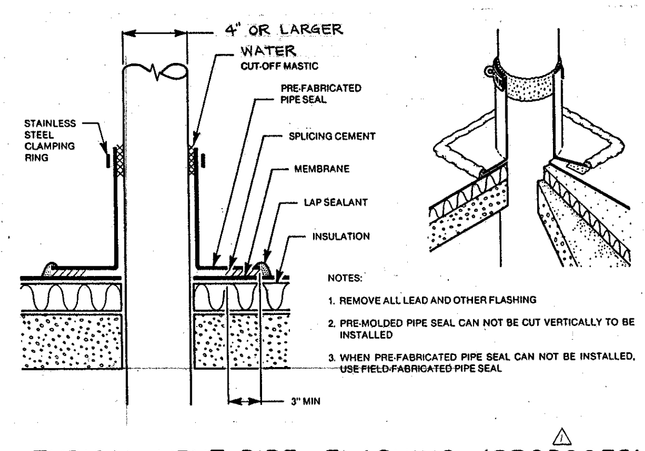

TYPICAL VENT PIPE FLASHING (PROPOSED) △

NTS

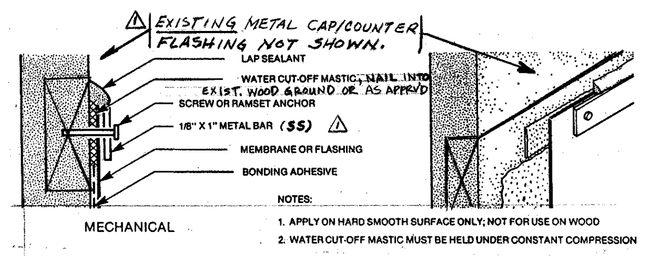

TYPICAL ALL VERTICAL TERMINATIONS

NTS (PROPOSED) △

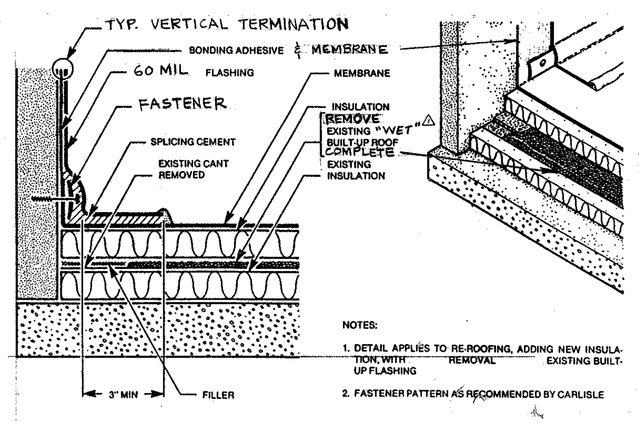

TYPICAL PERIMETER TERMINATION (PROPOSED) △

NTS

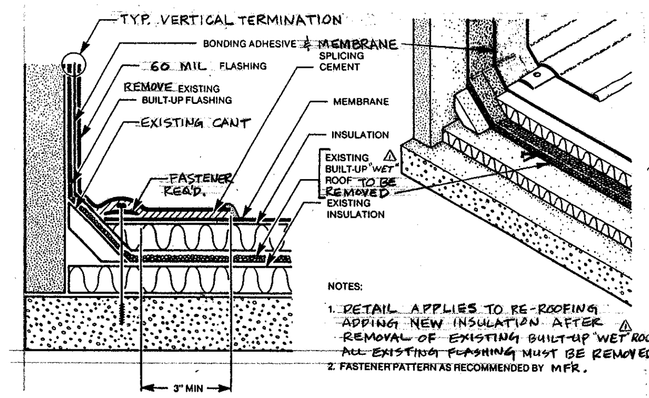

TYPICAL PERIMETER TERMINATION

NTS (PROPOSED) △

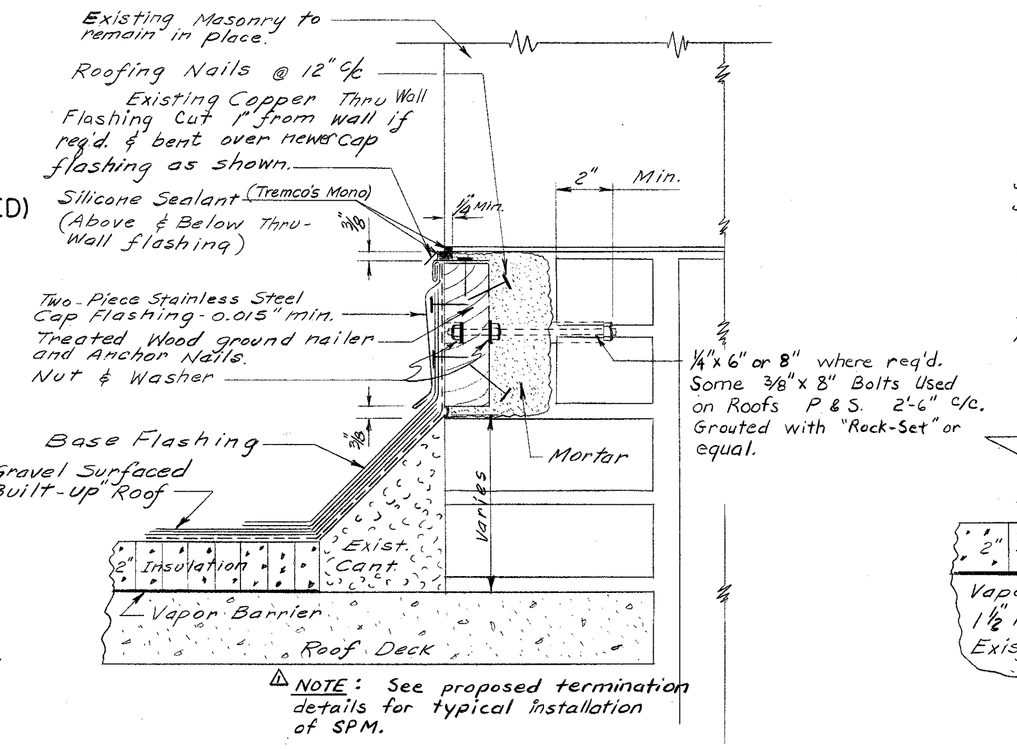

7 / 179-1 TYPICAL FLASHING DETAIL (EXISTING)

SCALE: 3" = 1'-0"

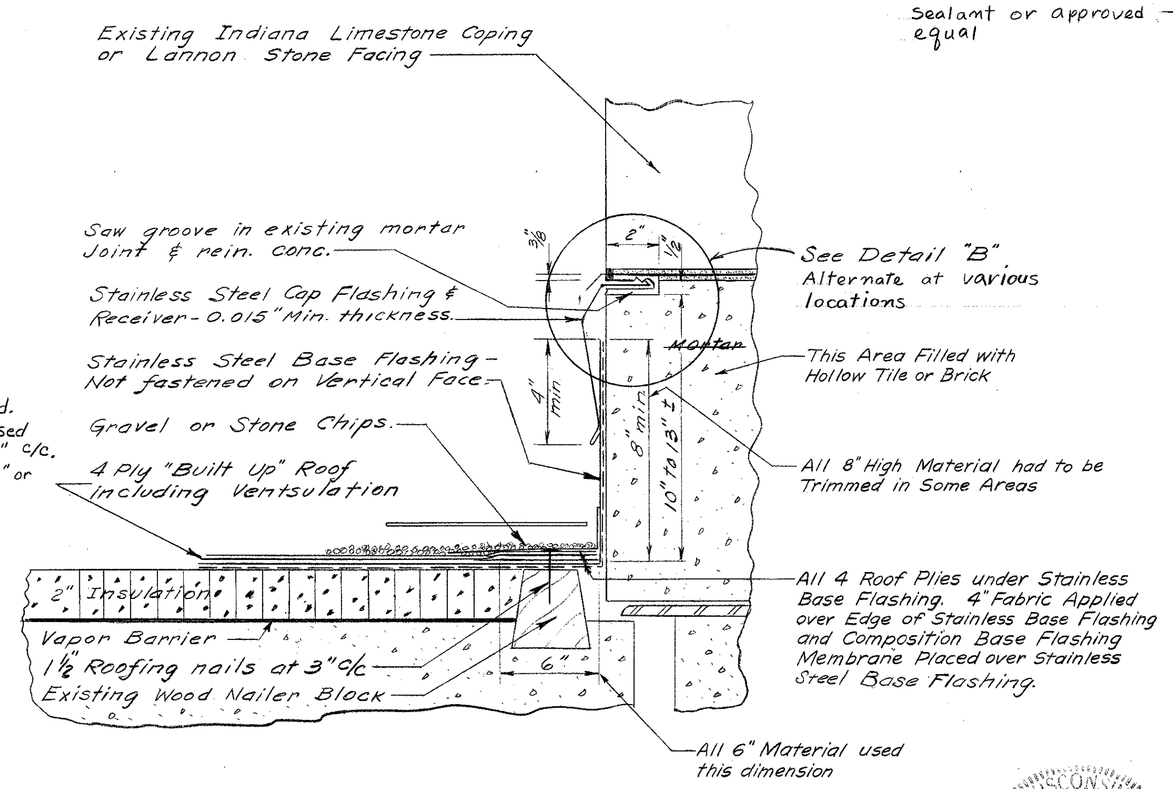

6 / 179-1 TYPICAL FLASHING FOR ROOFS N & T (EXISTING)

SCALE: 3" = 1'-0"

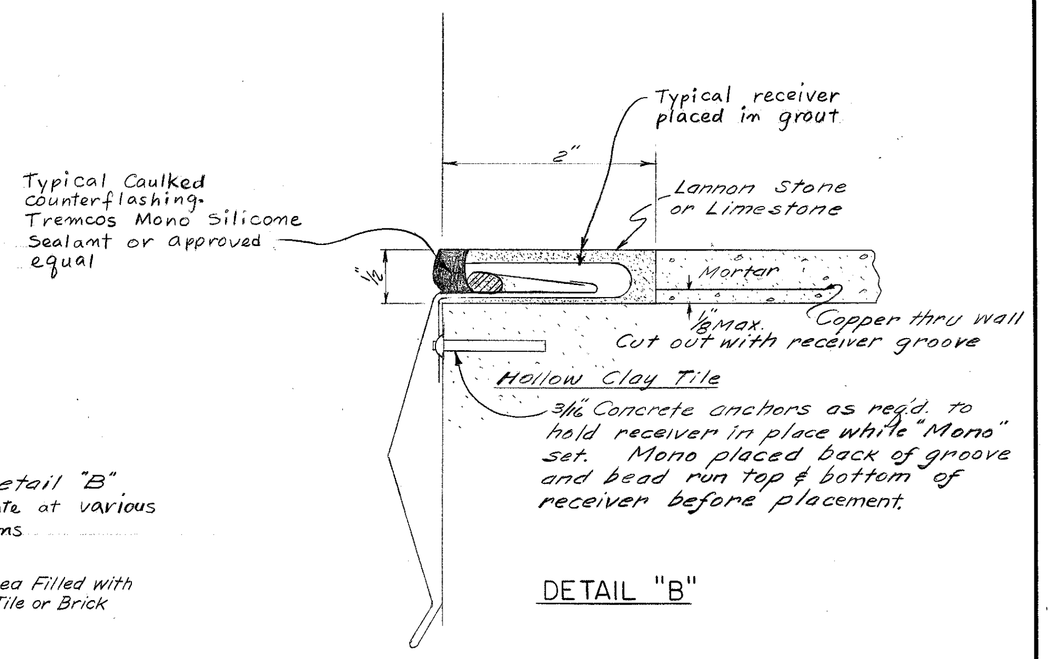

DETAIL "B"

No.	Date	Revision	By	Chkd
△	5-28-87	Formerly WP-176-3 Reissued as WP-179-3	JAN	AVS

WATER ENGINEERING DIVISION
BUREAU OF ENGINEERS
MILWAUKEE WATER WORKS
DEPARTMENT OF PUBLIC WORKS

LINNWOOD PURIFICATION PLANT

ROOF FLASHING DETAILS

CHEMICAL - SERVICE & ADJOINING BLDG'S

APPROVED A.V. Dimeno 3/12/87 APPROVED R.J. Koel ENGINEER IN CHARGE

APPROVED [signature] 3/18/87 SPEC. DEPUTY COMMISSIONER OF PUBLIC WORKS APPROVED [signature] CITY ENGINEER

DESIGNED BY AVS
DRAWN BY JAN/WY
TRACED BY
CHECKED BY AVS
DATE 8-20-86
SCALE AS SHOWN
FILE 3-11-25
DRWG. WP-179-3

WISCONSIN RAYMOND J. KOEL E-6711 MILWAUKEE, WIS. REGISTERED PROFESSIONAL ENGINEER

MICROFILMED